STAFF REPORT

TO: PLANNING COMMISSION

FROM: COMMUNITY DEVELOPMENT

DATE: MARCH 3, 2016

SUBJECT: **Zoning Code Update** **All Properties within Capitola**

Comprehensive Update to the City of Capitola Zoning Code (Municipal Code Chapter 17)
The Zoning Code serves as the Implementation Plan of the City's Local Coastal Program and therefore must be certified by the Coastal Commission.
Environmental Determination: Addendum to the General Plan Update EIR
Property: The Zoning Code update affects all properties within the City of Capitola.
Representative: Katie Cattan, Senior Planner, City of Capitola

BACKGROUND

The City of Capitola initiated an effort in 2014 to comprehensively update its 1975 Zoning Code. Over the past 18 months, staff solicited input from a variety of stakeholders to identify issues within the current Zoning Code and opportunities for improvement. Staff used this feedback to develop an issues and options paper which served as the basis for 8 public hearings with the Planning Commission and City Council to provide staff with policy direction prior to drafting an updated code.

Staff has completed a draft Zoning Map (Attachment 1) and Zoning Code (Attachment 7) based on policy direction received during the issues and options hearings. On February 4, 2016, the draft Zoning Code update was released for an extended public review and comment period. The hard copy of the draft zoning code is available for public review at City Hall and at the Capitola branch library. The draft code is available online at: http://www.cityofcapitola.org/communitydevelopment/page/zoning-code-update.

DISCUSSION

The updated Zoning Code represents a comprehensive overhaul of the existing code. The updated code presents a refreshed format and organization which is intended to be more user-friendly for the public, decision-makers, developers, and staff. Where possible, development standards are shown in tables for ease of reference and graphics are used to better illustrate the meaning and intent of various regulations.

The draft Zoning Code establishes new and modified land use regulations which will guide future development and design throughout the City of Capitola. The proposed code includes new and revised zoning districts, permitting procedures, and development standards throughout the City. Thus, the update affects all properties within the City. The extensive scope of revisions in the updated code does not lend itself to showing changes in a traditional strikeout-underline format. Instead, a disposition table has been prepared which includes all substantive

code revisions (Attachment 4). In addition, major changes are highlighted in the body of the draft code with an illustration and description as shown in the following example:

Note: Procedures and criteria for addressing unlisted land uses in Subsection D below are new.

The proposed Zoning Code also relocates the City's Green Building Ordinance from Municipal Code Chapter 17 (Zoning Code) to Chapter 15 (Buildings and Construction). No changes are currently proposed to the Green Building Ordinance other than moving it to another chapter of the Municipal Code.

On March 3, 2016, the Planning Commission will begin the review of draft zoning code. The following list includes substantial modifications to the code that staff will present during the March 3, 2016 hearing. Most of these modifications are in response to direction received during the issues and options hearings while others represent new or improved standards to regulate common uses and development in Capitola. Additional topics and issues may be discussed as desired by the Planning Commission.

Topic 1.	Zoning Map Modifications	
Draft Code:	Proposed Zoning Map	Attachment 1
	Existing Zoning Map	Attachment 2
	Zoning Map Modifications List	Attachment 3

The updated zoning map reflects land use designations on the General Plan land use map including regional and a community commercial areas, consolidation of the multiple mixed use district into one Neighborhood Mixed Use (MU-N) district, and clarity in overlay zones. The updated map also includes corrections to the current zoning map that reflect current built conditions, such as the multifamily condominium property on Opal Cliff Drive that is currently designated single family. A list of modifications to the zoning map are included as Attachment 3.

Topic 2.	Development Standards in Mixed Use Zones		
Draft Code:	New Development Standards	17.20.030	Page 20-4
	New Design Standards	17.20.030.C	Page 20-5

The draft zoning code includes two mixed use districts: Village Mixed Use (MU-V) and Neighborhood Mixed Use (MU-N). The new zoning map consolidates the existing Commercial/Residential (CR) district, the Neighborhood Commercial (CN) district and the Professional Office (PO) district into one Neighborhood Mixed Use (MU-N) district. The current code does not include standards for parcel area, parcel width, or parcel depth in mixed use districts. The new code would include minimum parcel dimension standards for each zone which would only apply if a property owner requested a subdivision. These standards would not affect any existing legal lots.

The development standards for the mixed use zones have been updated in the new code to relate to the existing code, with increased guidance. The current setback standards in the CV (Central Village) are extremely flexible. Under the existing code, the CV zone is subject to the 1987 Central Village Development Design Standards, 27 feet height maximum, and 10 percent open space. At the direction of Planning Commission and City Council during the Issues and Options hearings, the 1986 guidelines will be rescinded with the adoption of the new code and the relevant design guidelines incorporated into the code. The draft code maintains flexibility in

development standards in the MU-V district and incorporates design standards reflective of the 1987 guidelines to assist applicants in building placement and articulation.

The development standards for the existing CR, CN, and PO districts have increased separation of buildings with established minimum setbacks on all sides. The new consolidated MU-N district, introduces new development standards for front yards to ensure adequate spacing for sidewalks geared toward walkable mixed use neighborhoods while maintaining the increased separation between buildings. Exceptions have been added for those areas within the MU-N that have an established pattern of buildings being closer to the street or closer together (e.g., Capitola Avenue between the trestle and Blue Gum).

Topic 3. Required parking in the Mixed Use Neighborhood

Draft Code:	On-Site Parking in MU Zones	Table 17.76-1	Page 76-2

The draft code does not modify the parking requirements for the Village, with the exception of revised standards for take-out restaurants which is described in Topic 4 and specific requirements for a future hotel at the Village Theater site. Required parking in the Neighborhood Mixed Use (MU-N) zoning district is decreased in the draft code to reflect the ability of residents to walk to destinations, as follows:

Land Use	Existing Code	Decreased Requirement in MU-N
Retail	1 per 240 sq. ft.	1 per 400 sq. ft.
Eating and Drinking Establishments		
Bars and Lounges	1 per 60 sq. ft.	1 per 75 sq. ft.
Restaurants and Cafes	1 per 60 sq. ft.	1 per 400 sq. ft.
Take-out Food and Beverage	1 per 240 sq. ft.	1 per 400 sq. ft.
Personal Services		1 per 400 sq. ft.

Topic 4. 6 Seat Rule for Takeout Establishments

Draft Code:	Parking for Take-out in MU-N and MU-V	Table 17.76-1	Page 76-2
	Parking for Take-out in all other districts	Table 17.76-2	Page 76-3
	Definition of Eating and Drinking Est.	17.160(E)(1)a-c	Page 160-5

The existing zoning code requires 1 space per 240 square feet for *retail use and restaurants/take-out establishments* with six or fewer seats. The necessary oversight by City staff to monitor the six seat maximum within restaurants has been an ongoing enforcement issue. The draft code creates a new land use category *Take-out Food and Beverage*. The draft code defines a *Take-out Food and Beverage* as an "establishment where food and beverages may be consumed on the premises, take out, or delivered, but where the area open to customers is limited to no more than 160 square feet…" The new maximum area accessible to customers was based on a survey of existing conditions in the village. An example of a structure with approximately 160 square feet of area open to customers is Calypso Coffee located at 311 Capitola Avenue.

Topic 5. On-site Parking Alternatives

Draft Code:	On-Site Parking Alternatives	17.76.050	Page 76-9

New onsite parking alternatives included in the draft code are as follows: shared parking, valet parking, low demand exception, transportation demand management plan, and transit center

credit. The draft code also includes a provision for the City's adopted In-Lieu Parking Fee Program which is presently uncodified. The shared parking alternative is based on direction received on Issue #5 Parking of the Issues and Option Paper and excludes residential land uses. (Attachment 5. Issues and Options Matrix)

Topic 6. Incentives for Community Benefits

Draft Code:	Chapter 17.88 Incentives for Community Benefits	Page 88-1

This chapter is new to provide better defined standards for what qualifies as an acceptable community benefit which can be considered to allow increased FAR as provided in the General Plan, a Planned Development project, or increased height in commercial zones as prescribed in the existing zoning code.

Topic 7. Non-Conforming Structures

Draft Code:	New Substantial Demolition Standards	17.92.080.C	Page 92-6
	Replication of Single-Family Dwellings	17.92.080.D	Page 92-7

The existing code requires that a non-conforming structure come into conformity based on an 80 percent threshold of existing value. The draft code implements a new threshold based on 50 percent of lineal footage of walls or floor area. This chapter also includes a new provision to allow replication of non-conforming single-family dwellings with the approval of a conditional use permit with specific findings and conditions.

Topic 8: Permanent Outdoor Displays

Draft Code:	Permanent Outdoor Display	17.96.100	Page 96-9

The existing code lacks standards for outdoor displays. The draft code addresses this deficiency with a new standards for permanent outdoor displays of retail goods. To have a permanent outdoor display, the draft code requires a conditional use permit within the mixed use village zone and an administrative permit in all other zoning districts. The draft code includes new standards for height, size, permitted goods, hours, and screening. Design standards are included to ensure that outdoor displays complement the existing built conditions, are made of quality materials, are maintained, and do not violate the sign code.

Topic 9: Temporary Sidewalk Dining

Draft Code:	Temporary Sidewalk Dining	17.96.180	Page 96-16

The current code does not include specific review criteria for sidewalk dining areas. The draft code introduces new standards for outdoor dining within sidewalks and public rights-of-way. This is a common trend throughout destination communities. The new standards allow sidewalk dining along the restaurant's frontage with approval of an administrative permit and encroachment permit as long as ADA and other standards are met. The draft code also introduces a new allowance for conversion of on-street parking spaces (aka "parklets) to outdoor dining with Planning Commission approval of a conditional use permit and encroachment permit.

Topic 10: Design Review Committee

Draft Code:	Appointments. Consulting Architect.	17.108.040.C.2	Page 108-2

The existing Architecture and Site Review Committee would be renamed the Design Review Committee, but would maintain its current functions. The one modification would be the addition of a second architect selected by the Community Development Director as a contract

consultant. The contract Architect would participate only in the review of multi-family projects, non-residential projects, and other significant projects as determined by the Community Development Director.

Topic 11. Minor Modifications

Draft Code:	Minor Modifications	17.136	Page 136-1

A new minor modification process is proposed to allow the Planning Commission to approve projects which require flexibility from strict application of certain development standards when variance findings cannot be made. The process would allow up to a 10 percent deviation from the physical development standards that apply to property (height, setbacks, parking dimensions, etc.). The draft code specifically excludes minor modifications to lot area, width, and depth; minimum off-street parking requirements; residential density; and floor area ratio. The Planning Commission takes action on minor modification applications.

Topic 12. Changes to Approved Projects

Draft Code:	Changes to an Approved Project	17.156.070	Page 156-3

This is a new provision within the draft zoning code to address issues with the process to authorize post-approval changes to a project. This section establishes a procedure for the Community Development Director to approve minor changes to approved projects if the requested change complies with all the new review criteria. Changes which exceed these standards would be considered by the Planning Commission.

CEQA

An Addendum to the General Plan Update Environmental Impact Report has been prepared and is included as Attachment 6.

RECOMMENDATIONS

1. Accept the staff presentation, discuss the proposed draft Zoning Code update, and identify desired code revisions;
2. Recommend that the City Council amend Municipal Code Chapter 17 by rescinding the Zoning Code in it entirety and replacing it with the updated Zoning Code including Planning Commission revisions;
3. Recommend that the City Council recind the 1986 Central Village District Design Guidelines;
4. Recommend that the City Council amend Municipal Code Chapter 15 by adding the Green Building Ordinance to the Buildings and Construction code;
5. Recommend that the City Council approve the Addendum to the General Plan Update Environmental Impact Report for the Zoning Code update;
6. Recommend that the City Council authorize the Community Development Director to submit the Zoning Code update to the California Coastal Commission for certification.

DRAFT
RESOLUTION NO. ___

RESOLUTION OF THE CAPITOLA CITY COUNCIL AMENDING THE CITY'S ZONING CODE BY RESCINDING CHAPTER 17 OF THE CITY OF CAPITOLA MUNICIPAL CODE AMD RESCINDING THE 1986 CENTRAL VILLAGE DISTRICT DESIGN GUIDELINES AND ADOPTING THE NEW CHAPTER 17 OF THE CITY

OF CAPITOLA MUNICIPAL CODE, MOVING THE CITY'S GREEN BUILDING ORDINANCE FROM MUNICIPAL CODE CHAPTER 17 (ZONING CODE) TO CHAPTER 15 (BUILDINGS AND CONSTRUCTION), APPROVING AN ADDENDUM TO THE GENERAL PLAN UPDATE ENVIRONMENTAL IMPACT REPORT, AND AUTHORIZING THE COMMUNITY DEVELOPMENT DIRECTOR TO SUBMIT THE NEW ZONING CODE TO THE CALIFORNIA COASTAL COMMISSION FOR CERTIFICATION.

WHEREAS, Section 65300 of the Government Code of the State of California sets forth the requirements for the preparation and adoption of a local General Plan; and

WHEREAS, the City of Capitola's General Plan was adopted on June 26, 2014; and

WHEREAS, Section 65860 of the Government Code of the State of California sets forth the requirement of zoning consistency with the General Plan and the various land uses authorized by the ordinance to be compatible with the objectives, policies, general land uses, and programs specified in the General Plan; and

WHEREAS, the City of Capitola reviews land use designations and zoning in order to regulate appropriate use of land and to protect the public health, safety and welfare; and

WHEREAS, the City of Capitola proposed a comprehensive update to its Zoning Code (Municipal Code Chapter 17) which reflect the goals, policies, and implementation measures in the 2014 General Plan update; and

WHEREAS, the Zoning Code update would establish new and modified land use regulations which will guide future development and design throughout the City of Capitola to implement the General Plan; and

WHEREAS, the proposed Zoning Code update includes new and revised zoning districts, permitting procedures, and development standards throughout the City of Capitola; thus affecting all properties within the City; and

WHEREAS, the proposed Zoning Code update would move the City's Green Building Ordinance from Municipal Code Chapter 17 (Zoning Code) to Chapter 15 (Buildings and Construction); and

WHEREAS, the new Zoning Code update is accompanied by a new Zoning Map which includes the revised zoning districts with correct nomenclature, corrects errors on the previous zoning map, and identifies overlay zones; and

WHEREAS, an Addendum to the General Plan Update Environmental Impact Report was prepared for the new Zoning Code in accordance with State law and CEQA Guidelines; and

WHEREAS, consistent with CEQA and City Guidelines, it was determined that there is no substantial evidence that the new Zoning Code will have a significant effect on the environment; and

WHEREAS, the City of Capitola's Local Coastal Program (LCP) was certified by the California Coastal Commission in December of 1981 and has since been amended from time to time; and

WHEREAS, The Capitola Zoning Code Update affects zoning within the Coastal Zone, therefore the updated Zoning Code must be certified by the California Coastal Commission; and

WHEREAS, The Planning Commission conducted public hearings on April 30, May 18, May 21, June 22, and July 20, 2015 to review the Issues and Options report that focused on larger policy issues within the existing zoning code and relative options to apply to the new

zoning code. During these hearing, the Planning Commission heard public comment and made recommendations on 17 Issues included in the Issues and Options report; and

WHEREAS, the City Council conducted public hearing on April 30, October 19, October 26, and November 12, 2015 to review the Issues and Options report that focused on policy issues within the existing zoning code and relative options to apply to the new zoning code. During these hearings, the City Council reviewed the Planning Commission recommendations, heard public comment, and provided direction on desired implementation within the new zoning code; and

WHEREAS, the new Zoning Code implements the direction provided by the Planning Commission and City Council during the public hearings for the Issues and Options report; and

WHEREAS, the Planning Commission held a public hearing to review and consider the draft Zoning Code on March 3, 2016 and March 17, 2016, and recommended the City Council rescind Chapter 17 of the City of Capitola Municipal Code, rescind the 1986 Central Village District Design Guidelines, adopt the new Chapter 17 of the City of Capitola Municipal Code, move the City's Green Building Ordinance from Municipal Code Chapter 17 (Zoning Code) to Chapter 15 (Buildings and Construction), approve the Addendum to the General Plan Update Environmental Impact Report, and authorize the Community Development Director to submit the new zoning code to the California Coastal Commission for certification; and

WHEREAS, the City Council conducted public hearings on **ADD DATES** and adopted Ordinances No. XXX to rescind Chapter 17 of the City of Capitola Municipal Code, rescind the 1986 Central Village District Design Guidelines, adopt the new Chapter 17 of the City of Capitola Municipal Code, move the City's Green Building Ordinance from Municipal Code Chapter 17 (Zoning Code) to Chapter 15 (Buildings and Construction), approve the Addendum to the General Plan Update Environmental Impact Report, and authorize the Community Development Director to submit the new zoning code to the California Coastal Commission for certification; and

WHEREAS, the new Zoning Code was submitted to and reviewed by CCC and subsequently revised to respond to comments submitted by CCC; and

WHEREAS, the City Council now finds:

1. The proposed draft Zoning Code is deemed to be in the public interest. The updated Zoning Code represents a comprehensive overhaul of the existing code. The updated code presents a refreshed format and organization which is intended to be more user-friendly for the public, decision-makers, developers, and staff. The draft zoning code includes development standards within tables for ease of reference and graphics are used to better illustrate the meaning and intent of various regulations. The draft Zoning Code includes new and revised zoning districts, permit processes, development standards, and procedures which are intended to streamline the development review process while implementing General Plan goals to protect Capitola's coastal village character and to promote design excellence.
2. The proposed Addendum to the General Plan Update Environmental Impact Report is consistent and compatible with the rest of the existing General Plan and any implementation programs that may be affected. The draft Zoning Code replaces the existing Zoning Code Chapter 17 of the City of Capitola Municipal Code. The draft Zoning Code is consistent with the Land Use Element, Open Space and Conservation Element, Mobility Element, Safety and Noise Element, Economic Development Element,

and the 2015-2023 Housing Element. No significant impacts have been identified in the Addendum to the General Plan Update Environmental Impact Report.

3. The potential impacts of the proposed Zoning Code have been assessed and have been determined not to be detrimental to the public health, safety, or welfare. It is intended to promote the needs of the community, including protecting Capitola's coastal village character, promoting design excellence, safe housing conditions, and vital neighborhoods.
4. The new Zoning Code was prepared in accordance with California Government Code Sections 65800-65862 and 30500-30525 reviewed and certified by the California Coastal Commission as required by State law. An Addendum to the General Plan Update Environmental Impact Report was completed consistent with CEQA Guideline requirements. The Planning Commission has considered the Addendum to the General Plan Update Environmental Impact Report and finds, based on the entire record before it, that there is no substantial evidence that the project will have a significant effect on the environment, and that the Addendum reflects the City's independent judgment and analysis.

WHEREAS, City Council has considered the Addendum to the General Plan Update Environmental Impact Report, together with the supporting documentation provided, and based on the basis of the whole record before the Council, finds there is no substantial evidence that the amendment will have a significant effect on the environment and that the Addendum reflects the City's independent judgment and analysis.

NOW, THEREFORE, BE IT HEREBY RESOLVED by the City Council of the City of Capitola as follows:

(a) The Addendum to the General Plan Update Environmental Impact Report for the City of Capitola Zoning Code is hereby approved;

(b) The City's Zoning Code is hereby amended to rescind Chapter 17 of the Capitola Municipal Code, rescind the Central Village Design Guidelines, and move the City's Green Building Ordinance from Municipal Code Chapter 17 (Zoning Code) to Chapter 15 (Buildings and Construction) and adopt the new Zoning Code within Chapter 17 of the Capitola Municipal Code ; and

(c) The Community Development Director is hereby authorized and directed to submit the new Zoning Code to the California Coastal Commission for final certification.

I HEREBY CERTIFY that the above and foregoing resolution was passed and adopted by the City Council of the City of Capitola at its regular meeting held on the XX day of MONTH, 2016, by the following vote:

AYES:
NOES:
ABSENT:
ABSTAIN:

_____
Ed Bottorff, Mayor

ATTEST: _____

Susan Sneddon, City Clerk

ATTACHMENTS:

1. Proposed Zoning Map
2. Existing Zoning Map
3. Zoning Map Modification List
4. Disposition Table
5. Issues and Option Matrix
6. Addendum to EIR
7. Draft Zoning Code Public Review 02.04.2016

Prepared By: Katie Cattan
Senior Planner

CITY OF CAPITOL
ZONING CODE UPDA

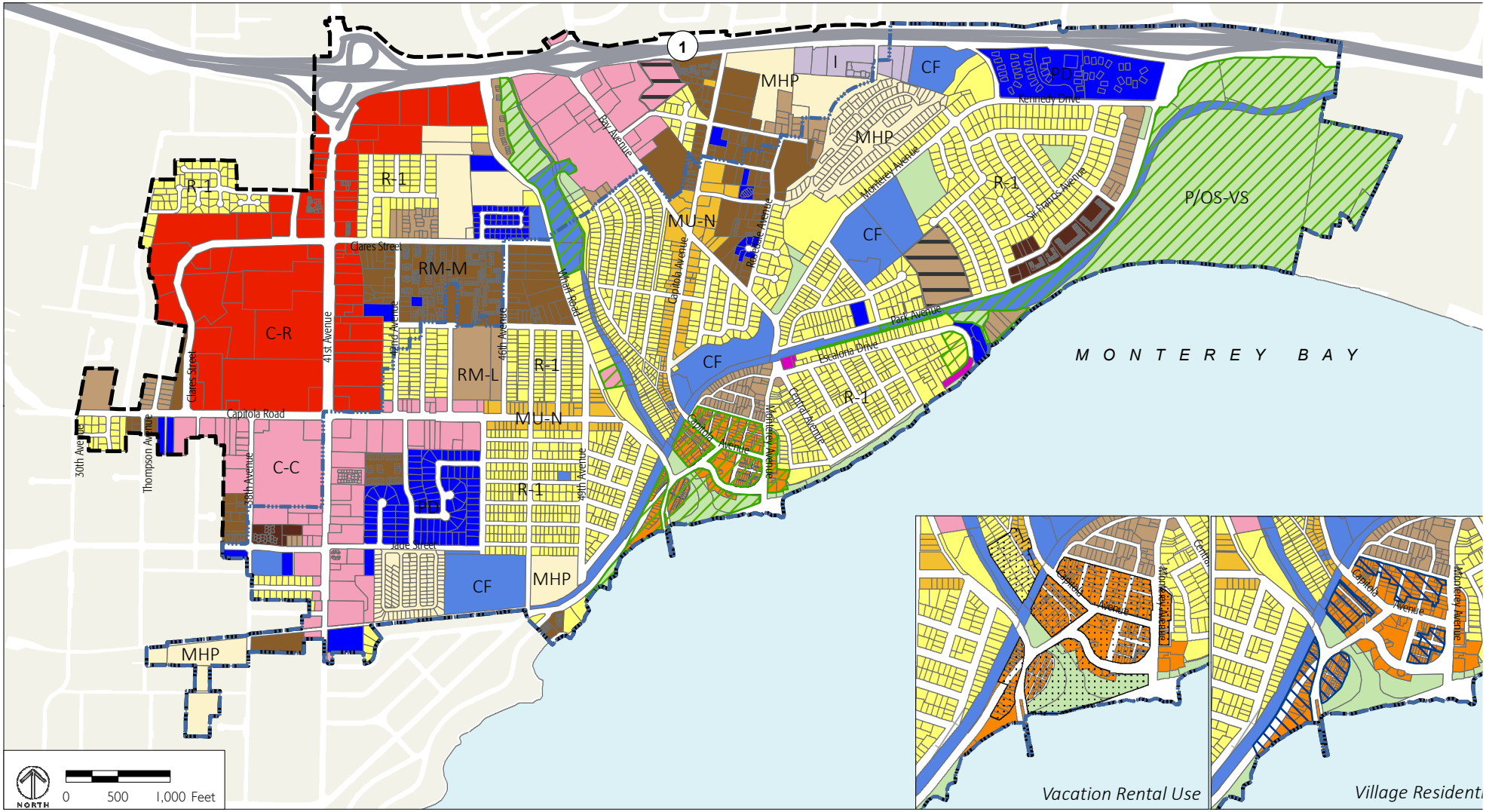

Residential Zoning Districts
- R-1 - Single-Family Residential
- RM-L - Multi-Family Residential, Low Density
- RM-M - Multi-Family Residential, Medium Density
- RM-H - Multi-Family Residential, High Density
- MHP - Mobile Home Park

Mixed-Use Zoning Districts
- MU-V - Village Mixed Use
- MU-N - Neighborhood Mixed Use

Commercial and Industrial Zoning Districts
- C-R - Regional Commercial
- C-C - Community Commercial
- VA - Visitor Accommodations
- I - Industrial

Other Zoning Districts
- P/OS - Parks and Open Space
- CF - Community Facility
- PD - Planned Development

Overlay Zones*
- -AHO - Affordable Housing Overlay
- -CZ - Coastal Zone
- -VRU - Vacation Rental Use
- -VR - Village Residental
- -VS - Visitor Serving
- City Limit

*See Local Coastal Program Habitats Map for boundaries of Environmentally Sensitive Habitats Area Overlay Zone.

DRAFT ZONING MAP

Attachment: Proposed Zoning Map (1392 : Zoning Code Update)

City of Capitola Zoning

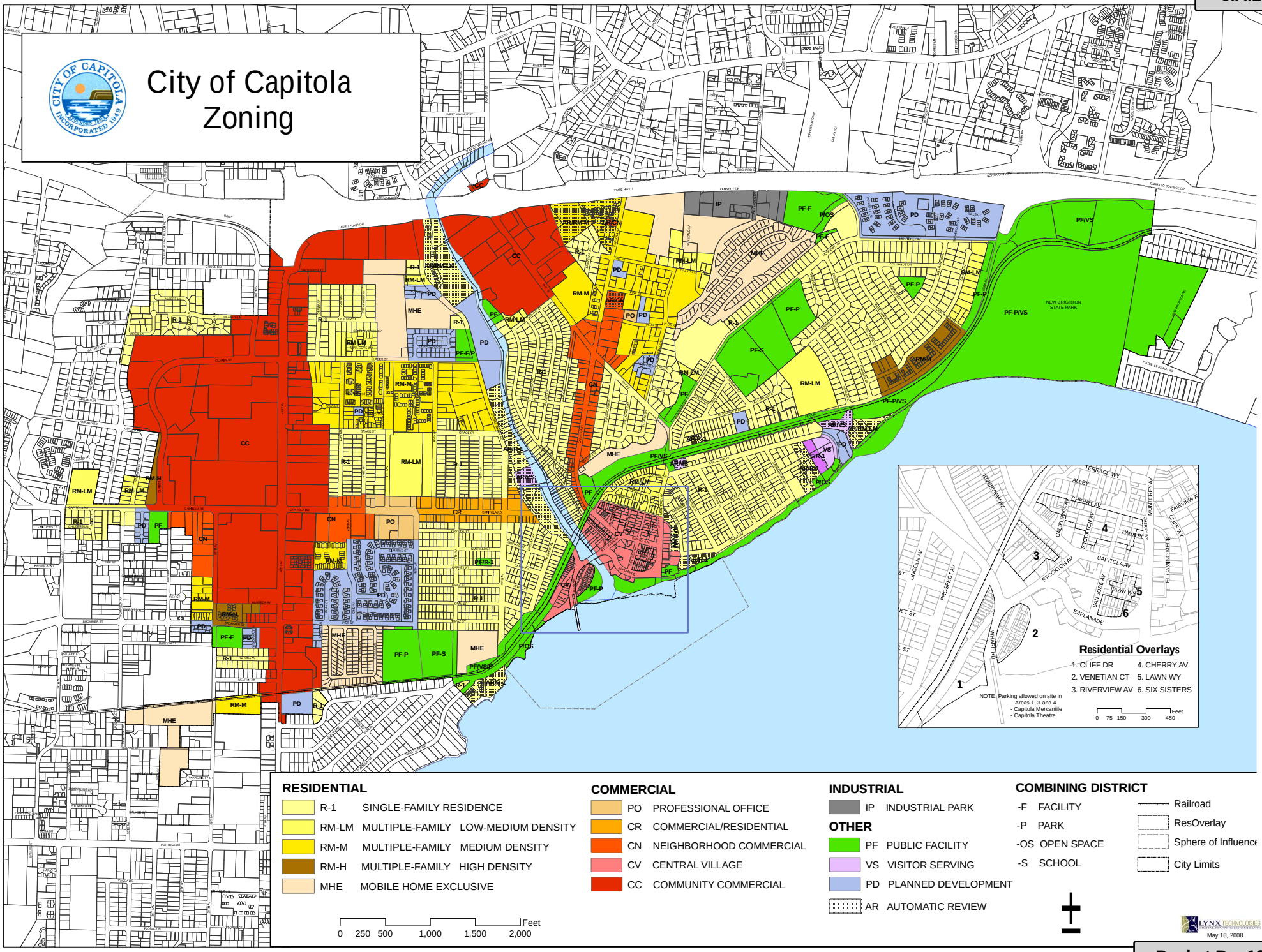

Attachment: Existing Zoning Map (1392 : Zoning Code Update)

Zoning Map Changes

1. AR (Automatic Review) was removed.
2. CR (Commercial/Residential) zoning district and PO (Professional Office) zoning district were replaced with MU-N (Neighborhood Mixed Use) zoning district along Capitola Road.
3. Created C-R (Regional Commercial) zoning district along 41st Avenue north of Capitola Road, Clares Street west of 41st Avenue, and Autoplaza Drive.
4. 3945 Melton Street. General Plan Land Use Map is Single Family designation. Currently used as a single-family home. Changed zoning from CC to R-1.
5. 519 Capitola Avenue. Previously zoned R-1. General Plan Land Use Map is Neighborhood Mixed use. Changes zoning to MU-N (Mixed Use Neighborhood)
6. 822 Kennedy Drive. Parcel behind the church was previously zoned Open Space. This was developed under R-1 as a CUP (housing for Church). Changed zoning to R-1.
7. 4800 and 4820 Opal Cliff. Annexed in 1963 as multi-family. The condos were built 1971 – 1972. Zoning map was previously R-1 (Single-Family). Updated to RM-M (Multi-Family, Medium Density).
8. 3865, 3883, and 3895 Brommer Street. Previously zoned CC. Current use is residential. New Zoning is RM-L (Multi-family residential, low density). Change requested by property owners.
9. Two parcels behind 2078 Wharf Road (Riverview of Capitola Condominiums). Previously zoned AR/RM-LM. New Zoning: P/OS Parks and Open Space.
10. Rispin Property on Wharf Road. Previously Zoned AR/VS/R-1. General Plan designation is Public/Quasi-Public. New Zoning: Community Facility
11. 620 El Salto. Previously zoned Visitor Accommodations. New Zoning: VS/R-1
12. 720 El Salto Drive. Removed VS overlay
13. 709 Escalona Drive. Removed VS overlay

Zoning Code Update Disposition Table

The Zoning Code Disposition Table tracks changes made to the existing Zoning Code in the updated Zoning Code. The first column lists sections from the existing Zoning Code, the second column identifies where the content from the existing section is addressed in the updated Zoning Code, and the third column identifies substantive changes made to existing requirements, if any.

Existing Code Section	Updated Code Section	Substantive Changes to Existing Code
Chapter 17.03: DEFINITIONS	17.160 (Glossary)	New definitions for revised land use categories and specialized terms used in Zoning Code
Chapter 17.06: ESTABLISHMENT AND DESIGNATION OF DISTRICTS		
17.06.010 Purpose	17.04.020 (Purpose of the Zoning Code)	Revised to reflect General Plan goals
17.06.020 Establishment of land use regulations and city districts	17.12.020 (Zoning Districts)	Distinguished between base zoning districts and overlay zones; revised names and abbreviations to match General Plan land use designations; Added new Environmentally Sensitive Habitats overlay. Added to list Affordable Housing Overlay, Transient Rental Use, Coastal Zone, Visitor Serving overlays. Deleted Archaeological/Paleontological Resources (APR) overlay, Automatic Review (AR) overlay, and Geological Hazards (GH) overlay. Moved existing Chapter 17.50 (Floodplain District) out of the zoning code.
17.06.030 District boundaries.	-	Deleted. Not needed
17.06.040 Regulations applicable by districts.	17.04.040 (Applicability of the Zoning Code)	No changes

Existing Code Section	Updated Code Section	Substantive Changes to Existing Code
Chapter 17.09: ZONING MAPS		
17.09.010 Zoning map of the City of Capitola	17.12.030 (Zoning Map)	No changes
Chapter 17.10: GREEN BUILDING REGULATIONS	-	Moved out of Zoning Code into Building Code. Green regulations will be updated through a separate process
17.10.010 Purpose and findings	-	-
17.10.020 Definitions	-	-
17.10.030 Standards for compliance	-	-
17.10.040 Exceptions	-	-
17.10.050 Maintenance of document	-	-
17.10.060 Method of compliance	-	-
17.10.070 Exceptional design	-	-
17.10.080 Creation of green building fund	-	-
Chapter 17.11: ARCHAEOLOGICAL/PALEONTOLOGICAL RESOURCES DISTRICT		
17.11.010 Intent.	17.56.010 (Purpose and Intent)	No change
17.11.020 Coastal development permit requirements.	17.56.020 (Coastal Permit)	No change

Existing Code Section	Updated Code Section	Substantive Changes to Existing Code
17.11.030 Archaeological survey report requirement.	17.56.030 (Archaeological Survey Report)	No change
17.11.040 Environmental assessment requirement.	17.56.040 (Environmental Assessment Requirement)	No change
17.11.050 Development standards.	17.56.050 (Development Standards)	No change
Chapter 17.12: MHE MOBILE HOME EXCLUSIVE DISTRICT		
17.12.010 Applicability	-	Deleted
17.12.020 Principal permitted uses	17.16.020 (Land Use Regulations)	Added "Utilities, Minor" and "Home Occupation, Minor" as principally permitted uses
17.12.030 Accessory uses	17.16.020 (Land Use Regulations)	Replaced with reference to Chapter 17.52 which describes permitted accessory uses in residential zones
17.12.040 Conditional uses	17.16.020 (Land Use Regulations)	Added "Residential Care Facilities, Small," "Residential Care Facilities, Large," "Community Assembly," "Day Care Centers," "Home Day Care, Large," "Home Day Care, Small," "Parks and Recreational Facilities," "Schools, Public or Private, "Utilities, Major, " "Home Occupation, Major," "Community Gardens" and "Urban Farms."
17.12.050 Minimum lot area	17.16.030 (Development Standards)	No change
17.12.060 Architectural and site review	17.16.020 (Land Use Regulations)	No change
Chapter 17.15: R-1 SINGLE-FAMILY RESIDENCE DISTRICT		

Existing Code Section	Updated Code Section	Substantive Changes to Existing Code
17.15.010 Applicability.	-	No change.
17.15.020 Purpose.	17.16.010 (Purpose of the Residential Zoning Districts)	Revised to reflect General Plan.
17.15.030 Design permit and architectural and site review.	Chapter 17.120 (Design Permits)	Revised Design Permit thresholds and review authority consistent with Planning Commission and City Council Direction.
17.15.035 Design permit approval.	Chapter 17.120 (Design Permits)	Revised Design Permit thresholds and review authority consistent with Planning Commission and City Council Direction.
17.15.040 Principal permitted uses.	17.16.020 (Land Use Regulations)	No change.
17.15.050 Accessory uses.	17.52 (Accessory Uses and Structures)	Replaced with reference to Chapter 17.52 which describes permitted accessory uses in non-residential zones
17.15.060 Conditional uses.	17.16.020 (Land Use Regulations)	Adds urban farm as a conditionally-allowed use. Secondary Dwelling units require an Administrative Permit. Adds minor utilities as a permitted use. Requires Minor Use Permit for Large Family Day Care with revised standards that more closely mirror Health and Safety Code requirements. Added separation and screening standards for large residential care facilities.
17.15.080 Height regulations.	17.16.030 (Development Standards)	Added height exception to 27 ft. under certain circumstances.
17.15.090 Lot area.	17.16.030 (Development Standards)	No change
17.15.100 Floor area ratio.	17.16.030 (Development Standards)	No change to maximum permitted FAR. Modifications to building features included in FAR calculation

Existing Code Section	Updated Code Section	Substantive Changes to Existing Code
	17.48.040 (Floor Area and Floor Area Ratio)	
17.15.110 Yards.	17.16.030 (Development Standards)	Modified approach to reduced setbacks in Riverview Terrace.
17.15.120 Yard encroachments.	17.48.030 (Setback Measurement and Exceptions)	No change
17.15.130 Parking.	17.76 (Parking)	Deleted ability for Planning Commission to require additional parking due to a parking problem in the neighborhood
17.15.140 Garage and accessory buildings.	17.52 (Accessory structures and Uses) 17.76 (Parking and Loading)	Rear setback for accessory buildings reduced to 3 feet. More than one accessory structure less than 80 ft. allowed with Administrative Permit. Deleted driveway width requirement for rear garages.
Chapter 17.18: R-M MULTIPLE-FAMILY DISTRICT		
17.18.010 Applicability.	-	No change
17.18.020 Purpose.	17.16.010 (Purpose of the Residential Zoning Districts)	Revised to reflect General Plan.
17.18.030 Architectural and site review.	Chapter 17.120 (Design Permits)	Revised Design Permit thresholds and review authority consistent with Planning Commission and City Council Direction.
17.18.040 Principal permitted uses.	17.16.020 (Land Use Regulations)	Adds group housing as a permitted use
17.18.050 Accessory uses.	17.52 (Accessory Uses and Structures)	Replaced with reference to Chapter 17.52 which describes permitted accessory uses in residential zones

Existing Code Section	Updated Code Section	Substantive Changes to Existing Code
17.18.060 Conditional use permits.	17.16.020 (Land Use Regulations)	Specifies bed and breakfast is conditionally permitted – eliminates term "lodging facility." All community assembly uses conditionally permitted, not just "social halls." Conditionally allowed community gardens and urban farms.
17.18.070 Development standards.	17.16.030 (Development Standards)	No change
17.18.080 Height regulations.	17.16.030 (Development Standards)	No change
17.18.090 Lot area and dimensions.	17.16.030 (Development Standards)	No change
17.18.100 Site area per dwelling unit.	17.16.030 (Development Standards)	No change
17.18.110 Lot coverage.	17.16.030 (Development Standards)	No change
17.18.120 Front yards.	17.16.030 (Development Standards)	No change
17.18.130 Side yards.	17.16.030 (Development Standards)	No change
17.18.140 Rear yard.	17.16.030 (Development Standards)	No change
17.18.150 Landscaping.	17.35.050 (Required Landscape Areas)	Replaced with mandatory requirement to landscape all required setback areas not used for property access.
17.18.160 Open space.	17.16.030.C (Additional Standards for RM Zoning Districts)	Minimum open space requirement based on percentage of entire lot, not just rear yard
17.18.170 Lot dimension determination.	17.160 (Glossary)	No change
17.18.180 Yard encroachments.	17.48.030 (Setback Measurement and Exceptions)	N0 change

Existing Code Section	Updated Code Section	Substantive Changes to Existing Code
17.18.190 Garages and accessory buildings.	17.52 (Accessory Structures and Uses)	No change
17.18.200 Parking.	17.76 (Parking and Loading)	No change
17.18.210 Loading areas.	17.76 (Parking and Loading)	No change
Chapter 17.19: TRO TRANSIENT RENTAL USE OVERLAY DISTRICT		
17.19.010 Purpose and definition	17.40.030 (Vacation Rental Use Overlay Zone)	No change
17.19.020 Use permits	17.40.030 (Vacation Rental Use Overlay Zone)	Requires Administrative Permit instead of a Conditional Use Permit. Permits do not expire annually. Added reference to standard permit revocation procedures.
Chapter 17.20: AHO AFFORDABLE HOUSING OVERLAY DISTRICT		
17.20.010 Purpose	17.40.020 (Affordable Housing Overlay Zone)	No change
17.20.020 Applicability	17.40.020 (Affordable Housing Overlay Zone)	No change
17.20.030 Definitions	17.40.020 (Affordable Housing Overlay Zone)	No change
17.20.040 Uses permitted with a development agreement	17.40.020 (Affordable Housing Overlay Zone)	No change

Existing Code Section	Updated Code Section	Substantive Changes to Existing Code
17.20.050 Development incentives	17.40.020 (Affordable Housing Overlay Zone)	Reduced minimum setback from single-family residential zones, changed maximum height to match base zoning district
17.20.060 Assurance of affordability	17.40.020 (Affordable Housing Overlay Zone)	No change
17.20.070 Pre-application procedure	17.40.020 (Affordable Housing Overlay Zone)	References new pre-application language in Section 18.88.020 that applies to all applications
17.20.080 Application – Development plans and map required	17.40.020 (Affordable Housing Overlay Zone)	No change
17.20.090 Findings.	17.40.020 (Affordable Housing Overlay Zone)	No change
Chapter 17.21: C-V CENTRAL VILLAGE DISTRICT		
17.21.010 Applicability.	-	No change
17.21.020 Purpose.	17.20.010 (Purpose of Mixed Use Zoning Districts)	Revised to better reflect goals and policies in General Plan.
17.21.030 Architectural and site review.	17.120 (Design Permits)	Replaced reference to Central Village Design Guidelines (1986) with applicable design guidelines adopted by the City Council.
17.21.035 Location of business activities.	17.96.100 (Permanent Outdoor Displays)	Replaced with new standards for outdoor commercial displays on properties in commercial and mixed uses zones.
17.21.040 Principal permitted uses.	17.20.020 (Land Use Regulations)	Active uses (e.g., retail, restaurant) permitted by-right on ground floor. Less active uses (e.g., office, residential)

Existing Code Section	Updated Code Section	Substantive Changes to Existing Code
		require CUP on ground floor and are permitted by-right above ground floor.
17.21.045 Principal permitted uses – Residential overlay district.	17.40.040 (Village Residential Overlay Zone)	No change
17.21.050 Accessory uses.	17.52 (Accessory Uses and Structures)	Replaced with reference to Chapter 17.52 which describes permitted accessory uses in all zones
17.21.060 Conditional uses.	17.20.020 (Land Use Regulations)	Personal service and retail permitted by right, secondary dwelling units permitted with Administrative Permit
17.21.061 Conditional uses in the residential overlay district.	17.40.040 (Village Residential Overlay Zone)	No change
17.21.070 Development standards.	17.20.030 (Development Standards)	Eliminated reference to Central Village Design Standards. Replaced with new building form and placement standards and Design Permit finding requiring consistency with adopted design guidelines.
17.21.080 Height regulations.	17.20.030 (Development Standards)	Allowed increase to 30 feet in certain circumstances
17.21.090 Lot area.	17.20.030 (Development Standards)	3,000 sq. ft. minimum lot area and new lot width and depth standards
17.21.100 Lot coverage.	-	Deleted
17.21.110 Yards.	17.20.030 (Development Standards)	Added new maximum setbacks
17.21.120 Parking.	17.76 (Parking)	No change
17.21.130 Loading areas.	17.76 (Parking)	No change

Existing Code Section	Updated Code Section	Substantive Changes to Existing Code
17.21.140 Valet Parking.	-	Deleted
Chapter 17.22: C-R COMMERCIAL/RESIDENTIAL DISTRICT		
17.22.010 Applicability.	-	No change
17.22.020 Purpose.	17.20.010 (Purpose of Mixed Use Zoning Districts)	Revised to better reflect goals and policies in General Plan.
17.22.030 Architectural and site review required.	Chapter 17.120 (Design Permits)	Revised Design Permit thresholds and review authority consistent with Planning Commission and City Council Direction.
17.22.040 Principal permitted uses.	17.20.020 (Land Use Regulations)	Retail and serves less than 3,000 sq. ft allowed by right
17.22.050 Conditional uses.	17.20.020 (Land Use Regulations)	Minor use permit required instead of conditional use permit for some uses
17.22.060 Development standards.	17.20.030 (Development Standards)	Revised setback standards and general design standards
17.22.070 Accessory uses.	17.52 (Accessory Uses and Structures)	Replaced with reference to Chapter 17.52 which describes permitted accessory uses in all zones
Chapter 17.24: CN NEIGHBORHOOD COMMERCIAL DISTRICT		
17.24.010 Applicability.	-	No change
17.24.020 Purpose and consistency.	17.24.010 (Purpose of Commercial and Industrial Zoning Districts)	Revised to better reflect goals and policies in General Plan.
17.24.030 Architectural and site review.	Chapter 17.120 (Design Permits)	Revised Design Permit thresholds and review authority consistent with Planning Commission and City Council Direction.

Existing Code Section	Updated Code Section	Substantive Changes to Existing Code
17.24.040 Principal permitted uses.	17.24.020 (Land Use Regulations)	New limitations on office. Small retail and personal services allowed by-right. Single-family homes no longer a permitted use.
17.24.050 Accessory uses.	17.52 (Accessory Uses and Structures)	Replaced with reference to Chapter 17.52 which describes permitted accessory uses in all zones
17.24.060 Conditional uses.	17.24.020 (Land Use Regulations)	Some uses allowed with a Minor Use Permit instead of a Conditional Use Permit
17.24.090 Height regulations.	17.24.030 (Development Standards)	New residential transition standards
17.24.100 Lot area.	17.24.030 (Development Standards)	5000 sq. ft. minimum
17.24.110 Lot coverage.	17.24.030 (Development Standards)	Eliminated lot coverage exclusion.
17.24.112 Side yard setback.	17.24.030 (Development Standards)	15 ft. interior side setback only when adjacent to residential zone 15 foot exterior side setback from edge of curb
17.24.114 Front yard setback.	17.24.030 (Development Standards)	15 foot front setback from edge of curb
17.24.116 Rear yard setback.	17.24.030 (Development Standards)	20 ft. rear setback only when adjacent to residential zone
17.24.130 Parking.	17.76.(Parking)	No change
17.24.140 Loading areas.	17.76.(Parking)	No change
17.24.150 Landscaping.	17.35.050 (Required Landscape Areas)	No change
Chapter 17.27: CC COMMUNITY COMMERCIAL DISTRICT		

Existing Code Section	Updated Code Section	Substantive Changes to Existing Code
17.27.010 Applicability.	-	No change
17.27.020 Purpose.	17.24.010 (Purpose of Commercial and Industrial Zoning Districts)	Revised to better reflect goals and policies in General Plan.
17.27.030 Architectural and site approval.	Chapter 17.120 (Design Permits)	Revised Design Permit thresholds and review authority consistent with Planning Commission and City Council Direction.
17.27.040 Principal permitted uses.	17.24.020 (Land Use Regulations)	Some uses allowed with a Minor Use Permit instead of a Conditional Use Permit
17.27.050 Accessory uses.	17.52 (Accessory Uses and Structures)	Replaced with reference to Chapter 17.52 which describes permitted accessory uses in all zones
17.27.060 Conditional uses.	17.24.020 (Land Use Regulations)	Revised to better achieve zone purpose.
17.27.070 Development standards.	17.24.030 (Development Standards)	No change
17.27.080 Height.	17.24.030 (Development Standards)	Height exception limited to 50 feet. Revised findings. Reduced height when adjacent to residential zone
17.27.090 Lot area.	17.24.030 (Development Standards)	No change
17.27.100 Lot coverage.	17.24.030 (Development Standards)	Eliminated lot coverage exclusion.
17.27.110 Yards.	17.24.030 (Development Standards)	15-foot minimum front and street side setback from curb, not property line. Interior side and rear setbacks when adjacent to residential zone.
17.27.120 Parking.	17.76.(Parking)	No change
17.27.130 Loading areas.	17.76.(Parking)	No change

Existing Code Section	Updated Code Section	Substantive Changes to Existing Code
17.27.140 Landscaping.	17.72.050 (Required Landscape Areas)	No change
Chapter 17.29: P/OS PARKS AND OPEN SPACE DISTRICT		
17.29.010 Applicability.	-	No change
17.29.020 Description and purpose.	17.32.010 (Purpose of the Special Purpose Zoning Districts)	No change
17.29.030 Architectural and site review required.	Chapter 17.120 (Design Permits)	No change
17.29.040 Principal permitted uses.	17.32.020 (Land Use Regulations)	No change
17.29.050 Conditional uses.	17.32.020 (Land Use Regulations	No change
17.29.060 Property development standards.	17.32.030 (Development Standards)	No change.
17.29.070 New Brighton State Beach special development standards.	17.32.030 (Development Standards	No change
Chapter 17.30: V-S VISITOR SERVING DISTRICT		
17.30.010 Applicability.	-	No Change
17.30.020 Purpose.	17.28.010 (Purpose of the Visitor Serving Zoning Districts)	No Change
17.30.030 Architectural and site approval.	Chapter 17.120 (Design Permits)	Design Permit requirements modified for all zoning districts

Existing Code Section	Updated Code Section	Substantive Changes to Existing Code
17.30.040 Conditionally permitted uses.	17.28.020 (Land Use Regulations)	Standardized list of conditionally permitted uses for each subzone into a single table. Maintained existing land use regulations.
17.30.042 Conditional visitor-serving uses – Rispin	17.28.020 (Land Use Regulations)	Standardized list of conditionally permitted uses for each subzone into a single table. Maintained existing land use regulations.
17.30.045 Conditional visitor-serving uses – Shadowbrook	17.28.020 (Land Use Regulations)	Standardized list of conditionally permitted uses for each subzone into a single table. Maintained existing land use regulations.
17.30.047 Conditionally permitted uses – Monarch Cove Inn	17.28.020 (Land Use Regulations)	Modified conditionally permitted uses as directed by City Council
17.30.048 Conditionally permitted uses – El Salto	17.28.020 (Land Use Regulations)	Standardized list of conditionally permitted uses for each subzone into a single table. Maintained existing land use regulations.
17.30.050 Accessory uses	17.52 (Accessory Uses and Structures)	Replaced with reference to Chapter 17.52 which describes permitted accessory uses in all zones
17.30.070 Development standards	17.28.030 (Development Standards)	No change
17.30.080 Height	17.28.030 (Development Standards)	No change
17.30.090 Lot area	17.28.030 (Development Standards)	No change
17.30.100 Lot coverage	17.28.030 (Development Standards)	No change
17.30.110 Yards	17.28.030 (Development Standards)	No change
17.30.120 Parking	17.76 (Parking)	No change
17.30.130 Loading areas	17.76 (Parking)	No change

Existing Code Section	Updated Code Section	Substantive Changes to Existing Code
17.30.140 Landscaping and lighting	17.35.050 (Required Landscape Areas)	No change
Chapter 17.33: PO PROFESSIONAL OFFICE DISTRICT		Deleted PO District
17.33.010 Applicability	-	-
17.33.020 Purpose	-	-
17.33.030 Architectural and site approval	-	-
17.33.040 Principal permitted uses	-	-
17.33.050 Accessory uses	-	-
17.33.060 Conditional uses	-	-
17.33.070 Development standards – Residential uses	-	-
17.33.080 Development standards – Nonresidential uses	-	-
17.33.090 Height regulations	-	-
17.33.100 Lot area	-	-
17.33.110 Lot coverage	-	-
17.33.120 Yards	-	-
17.33.130 Parking	-	-
17.33.140 Loading areas	-	-

Existing Code Section	Updated Code Section	Substantive Changes to Existing Code
17.33.150 Landscaping	-	-
Chapter 17.36: IP INDUSTRIAL PARK DISTRICT		
17.36.010 Applicability.		No change
17.36.020 Purpose.	17.24.010 (Purpose of Commercial and Industrial Zoning Districts)	Revised to better reflect goals and policies in General Plan.
17.36.030 Architectural and site approval.	Chapter 17.120 (Design Permits)	Revised Design Permit thresholds and review authority consistent with Planning Commission and City Council Direction.
17.36.040 Principal permitted uses.	17.24.020 (Land Use Regulations)	No change
17.36.050 Accessory uses.	17.52 (Accessory Uses and Structures)	Replaced with reference to Chapter 17.52 which describes permitted accessory uses in all zones
17.36.060 Conditional uses.	17.24.020 (Land Use Regulations)	Address retail and personal service uses as accessory uses; deleted residential uses as permitted use
17.36.070 Development standards.	-	Deleted. Not needed.
17.36.080 Height regulations.	17.24.030 (Development Standards)	No change
17.36.090 Lot coverage.	17.24.030 (Development Standards)	Replaced with FAR of 0.5
17.36.100 Yards.	17.24.030 (Development Standards)	No setback required except when adjacent to a residential zone.
17.36.110 Parking.	17.76.(Parking)	No change
17.36.120 Loading areas.	17.76.(Parking)	No change

Existing Code Section	Updated Code Section	Substantive Changes to Existing Code
17.36.130 Other required conditions	-	Deleted
Chapter 17.39: PD PLANNED DEVELOPMENT DISTRICT		
17.39.010 Purpose.	17.36.010 (Purpose of the PD Zoning Districts)	Revised to better reflect purpose of PD zoning district
17.39.020 Standards and requirements.	17.36 (Planned Development Zoning District)	Deleted minimum parcel size requirement. Prohibit PD on properties with a single-family residential General Plan land use designation
17.39.030 Preliminary development plan approval.	17.30.060 (Preliminary Development Plans)	Preliminary development plan now requires City Council approval. Revised submittal requirements.
17.39.040 General development plan and schedule approval.	17.30.080 (Final Development Plans)	Changed name to Final Development Plan. Revised submittal requirements. Added findings for FDP that are different from PDP.
17.39.050 Findings required.	17.30.060 (Preliminary Development Plans) and 17.30.080 (Final Development Plans)	Revised findings to allow PD only if project produces community benefits that can't be obtained with conventional zoning
17.39.060 Planning commission and city council action.	17.30.060 (Preliminary Development Plans) and 17.30.080 (Final Development Plans)	No substantive change
17.39.070 Architectural and site approval.	17.30.050 (Required Approvals)	No substantive change
17.39.080 Conditional uses.	-	Deleted requirement for all uses to be a conditional use permit.
17.39.090 Utilities underground.	-	Deleted

Existing Code Section	Updated Code Section	Substantive Changes to Existing Code
17.39.100 Amendments.	17.30.080.J (Effect of Development Plan)	New language on compliance with Final Development Plan
17.39.110 Appeals.	17.30.080.I (Post-Decision Procedures)	No substantive change
Chapter 17.42: PF PUBLIC FACILITIES DISTRICT		Name of zoning district changed to Community Facility
17.42.010 Applicability	-	No change
17.42.020 Purpose	17.32.010 (Purpose of the Special Purpose Zoning Districts)	No change
17.42.030 Architectural and site review	Chapter 17.120 (Design Permits)	No change
17.42.040 Principal permitted uses	17.32.020 (Land Use Regulations)	Changed schools to a conditionally permitted use
17.42.050 Accessory uses	17.32.020 (Land Use Regulations)	Replaced with reference to Chapter 17.52 which describes permitted accessory uses in non-residential zones
17.42.060 Conditional uses	17.32.030 (Development Standards)	Added colleges and trade schools as a conditionally permitted use
17.42.070 Development standards	17.32.030 (Development Standards)	No change
17.42.080 Height regulations and lot coverage	17.32.030 (Development Standards)	No change
17.42.090 Lot area	17.32.030 (Development Standards)	No change
17.42.100 Yards	17.32.030 (Development Standards)	No change
17.42.110 Parking	17.76 (Parking and Loading)	No change

Existing Code Section	Updated Code Section	Substantive Changes to Existing Code
17.42.120 Loading area	17.76 (Parking and Loading)	No change
17.42.130 Landscaping	17.72.050 (Required Landscape Area)	Replaced with minimum landscape area requirement as determined through the permit approval process
Chapter 17.45: AR AUTOMATIC REVIEW DISTRICT		Deleted district
17.45.010 Applicability	-	-
17.45.020 Purpose	-	-
17.45.030 Establishment criteria	-	-
17.45.040 Use permits	-	-
17.45.050 Architectural and site review	-	-
Chapter 17.46: CZ COASTAL ZONE COMBINING DISTRICT		
17.46.010 Purpose.	17.44.010 (Purpose)	Revised to better reflect the purpose of the overlay zone
17.46.020 General provision.	17.44.030 Relationship to Base Zoning District); 17.32.040 (Permitted Land Uses); 17.32.050 (Development Standards)	No substantive change
17.46.030 Definitions.	17.44.020 (Definitions)	Removed definitions not used in chapter
17.46.040 Development requiring a coastal permit/jurisdiction.	17.44.060 (Coastal Permit Requirements)	Clarified permit requirements for prior legal and illegal development.

Existing Code Section	Updated Code Section	Substantive Changes to Existing Code
17.46.050 Coastal permit exemptions.	17.44.070 (Coastal Permit Exemptions	No substantive change
17.46.055 Coastal exclusion zones.	17.44.080 (Categorical Exclusions)	No substantive change
17.46.060 Permit application requirements and fees.	17.44.100 (Application Submittal)	No substantive change
17.46.070 Application review.	17.44.110 (Public Notice and Hearing)	No substantive change
17.46.080 Hearing and noticing procedures.	17.44.110 (Public Notice and Hearing)	No substantive change
17.46.090 Coastal permit approval.	17.44.120 (Findings for Approval)	Replaced with findings for approval that apply to all coastal permits
17.46.100 Notice of final action.	17.44.130 (Notice of Final Action)	Deleted Failure to Act paragraph
17.46.110 Appeals.	17.44.140 (Appeals)	Deleted grounds for appeal (too subjective)
17.46.120 Permit issuance.	17.44.150 (Permit Issuance)	No change
17.46.130 Emergency permits.	17.44.160 (Emergency Permits)	No change
17.46.140 Amendments.	17.44.170 (Coastal Permit Amendments)	No change
17.46.150 Consistency required.	17.44.050.B (Affordable Housing Density)	No change
Chapter 17.48: GH GEOLOGIC HAZARDS DISTRICT		

Existing Code Section	Updated Code Section	Substantive Changes to Existing Code
17.48.010 Definitions.	17.68.020 (Geologic/Engineering Report)	Deleted terms removed from chapter
17.48.020 Applicability.	-	Deleted
17.48.030 Purpose.	17.68.010 (Purpose and Applicability)	No substantive change
17.48.040 Combining district.	-	Deleted
17.48.050 Principal permitted uses.	-	Deleted
17.48.060 Accessory uses.	-	Deleted
17.48.070 Conditional uses.	-	Deleted
17.48.080 Development standards.	-	Deleted
17.48.090 Beach area regulations.	17.68.030 (Shoreline Protection Measures)	No change
17.48.100 Bluff and cliff area regulations.	17.68.040 (Development in Bluff and Cliff Areas)	No change
17.48.110 Earthquake fault areas.	-	Deleted. There are no earthquake faults in Capitola
17.48.120 Floodplain.	-	Deleted. Redundant with Chapter 17.50
17.48.130 Landslide areas.	17.68.020 (Geologic/Engineering Report)	No change
17.48.140 Steep slope areas.	17.68.020 (Geologic/Engineering Report)	No change

Existing Code Section	Updated Code Section	Substantive Changes to Existing Code
17.48.150 Other geologic hazard areas.	17.68.020 (Geologic/Engineering Report)	No change
17.48.160 Contents of geologic/engineering reports.	17.68.020 (Geologic/Engineering Report)	No change
17.48.170 Appeals.	-	Deleted
17.48.180 Requirement of disclosure of property location by seller to seller's agent.	17.68.020 (Geologic/Engineering Report)	No change
17.48.190 Report to be noted on subdivision maps.	17.68.020 (Geologic/Engineering Report)	No change
Chapter 17.50: FLOODPLAIN DISTRICT		Removed from Zoning Code to be placed in different title of Municipal Code
17.50.010 Statutory authorization.	-	-
17.50.020 Findings of fact.	-	-
17.50.030 Statement of purpose.	-	-
17.50.040 Methods of reducing flood losses.	-	-
17.50.050 Abrogation and greater restrictions.	-	-
17.50.060 Interpretation.	-	-
17.50.070 Warning and disclaimer of liability.	-	-

Existing Code Section	Updated Code Section	Substantive Changes to Existing Code
17.50.080 Severability.	-	-
17.50.090 Basis for establishing the areas of special flood hazard.	-	-
17.50.100 Definitions.	-	-
17.50.110 Designation of the floodplain administrator.	-	-
17.50.120 Duties and responsibilities of the floodplain administrator.	-	-
17.50.130 Combining district.	-	-
17.50.140 Compliance.	-	-
17.50.150 Principal permitted uses.	-	-
17.50.160 Accessory uses.	-	-
17.50.170 Conditional uses.	-	-
17.50.180 Development standards.	-	-
17.50.190 Development permit.	-	-
17.50.200 Appeals.	-	-
17.50.210 Standards of construction.	-	-
17.50.220 Standards for utilities.	-	-
17.50.230 Standards for subdivisions.	-	-
17.50.240 Development standards for manufactured homes and	-	-

Existing Code Section	Updated Code Section	Substantive Changes to Existing Code
manufactured home parks and subdivisions in floodplain area.		
17.50.250 Standards for recreational vehicles.	-	-
17.50.260 Standards within floodways.	-	-
17.50.270 Coastal high hazard areas.	-	-
17.50.280 Variance procedure.	-	-
17.50.290 Conditions for variances.	-	-
17.50.300 Approval of variances.	-	-
17.50.310 Nonconforming structures in floodplain.	-	-
17.50.320 Variance appeal procedure.	-	-
17.50.330 Disclosure requirement.	-	-
Chapter 17.51: PARKING AND LOADING		
17.51.015 General provisions	Various sections in 16.76 (Parking)	Deleted prohibition of designating spaces for specific tenants in parking lots; expanded possibilities for off-site parking; Expanded requirements for bicycle parking; added details on parking lot design
17.51.040 Obligation continuing	17.76.040 (General Requirements)	No substantive change

Existing Code Section	Updated Code Section	Substantive Changes to Existing Code
17.51.050 Development and maintenance of parking areas	17.76.040 (General Requirements)	No substantive change
17.51.055 Parking lot design	17.76.060 (Parking Design and Development Standards)	Expanded parking lot design standards
17.51.060 Screening and landscaping	17.76.070 (Parking Lot Landscaping); 17.76.060 (Parking Design and Development Standards)	Added detail on screening requirement Require screening for lots of 6 spaces or more (instead of 10); requires 1 tree per five spaces (instead of 1:2, which is infeasible)
17.51.063 Irrigation	17.76.070 (Parking Lot Landscaping)	No substantive change
17.51.066 Landscape protection	17.76.070 (Parking Lot Landscaping)	No substantive change
17.51.080 Surfacing	17.76.060 (Parking Design and Development Standards)	No substantive change
17.51.090 Lighting	17.76.060 (Parking Design and Development Standards)	Added detail on illumination requirements
17.51.100 Floor area defined	17.48.040 (Floor Area and Floor Area Ratio)	Calculation of floor area standardize for all purposes in the zoning code, not just calculating parking requirement. Otherwise, no substantive change.
17.51.105 Quasi-public seating areas	17.48.040 (Floor Area and Floor Area Ratio)	No substantive change
17.51.110 Fractional measurements	17.48.030 (Required Parking Spaces)	No change

Existing Code Section	Updated Code Section	Substantive Changes to Existing Code
17.51.120 Location of required parking and loading facilities	17.48.030 (Required Parking Spaces); 17.76.050 (On-Site Parking Alternatives)	Added requirement that parking may not be located in required front and exterior side setbacks.
17.51.130 Number of parking spaces required	17.48.030 (Required Parking Spaces)	Revised standards for Mixed Use Neighborhood District
17.51.135 Nonconforming parking – Requirements	17.76.050 (Applicability)	No change
17.51.140 Off-street loading spaces required	17.48.090 (On-Site Loading)	No change
17.51.150 Exceptions	17.76.050 (Applicability)	No change
17.51.160 Open space and screening required for loading areas adjacent to residential districts	17.48.090 (On-Site Loading)	No change
17.51.170 Size of loading space	17.48.090 (On-Site Loading)	No change
17.51.180 Size of nonresidential parking spaces	17.76.060 (Parking Design and Development Standards)	9 ft. by 18 ft. standard minimum dimension. Allows a specific number of compact spaces with minimum dimensions specified
17.51.190 Plan of required off-street parking and/or loading area	17.76.040 (General Requirements)	No substantive change
17.51.200 Use of required off-street parking by another building or use	17.76.050 (On-Site Parking Alternatives)	Replaced with new shared parking provisions
17.51.210 Uses not specifically mentioned	17.76.030 (Required Parking Spaces)	Director, instead of Planning Commission, determines similar use.

Existing Code Section	Updated Code Section	Substantive Changes to Existing Code
17.51.220 Shuttle program parking	17.76.100 (Shuttle Program Parking)	No change.
Chapter 17.54: FENCES		
17.54.010 Defined	17.132 (Glossary)	No change
17.54.020 Permit requirements	17.44.010 (Permit Requirements)	Fences consistent with standards require an administrative permit instead of a fence permit. Clarification of fence height allowed in exterior side setback. Planning Commission approves deviation from standards through conditional use permit process.
17.54.030 Fire or vehicle hazard prohibited	-	Deleted. Impractical/undesirable requirement.
17.54.040 Appeal	17.152 (Appeals and Calls for Review)	Removed from fence and wall chapter. Standard appeal process for administrative permits and conditional use permits apply to fences and walls
17.54.050 Appeal to council	17.152 (Appeals and Calls for Review)	Removed from fence and wall chapter. Standard appeal process for administrative permits and conditional use permits apply to fences and walls
17.54.060 Temporary or construction fences	-	Deleted. Not needed in Zoning Code.
17.54.070 Penalty for violation	-	Deleted. General enforcement procedures apply to fences.
17.54.080 Permit fee	-	Deleted. This is true for all permits and approval and does not need to be restated for each.
Chapter 17.57: SIGNS		

Existing Code Section	Updated Code Section	Substantive Changes to Existing Code
17.57.005 Application of chapter.	-	Deleted
17.57.010 Definitions.	17.80.020 (Definitions) 17.80.040 (Rules of Measurement)	Added to definition of sign area rules for measuring are of multi-dimensional signs. Clarified that supporting framework or bracing outside of display is not include in measurement of sign area.
17.57.015 Standard of review.	17.132.060 (Findings for Approval)	Replaced with new findings for approval of Sign Permit.
17.57.020 Sign permit.	17.80.030 (Permit Requirements)	Most signs now approved by Community Development Director subject to expanded standards
17.57.030 Exemptions.	17.80.050 (Signs Allowed without Permits)	Expanded list of signs exempt from planning permit, added standards (e.g., maximum size), added that changes to a sign face and routine maintenance do not require a planning permit.
17.57.040 Prohibited.	17.80.060 (Prohibited Signs)	Expanded the list of prohibited signs
17.57.050 Temporary signs.	17.80.110 (Temporary Signs)	No changes
17.57.060 Central village signs.	17.80.070 (General Sign Standards); 17.80.080 (Standards for Specific Types of Signs); 17.80.090 (Sign Standards for Zoning Districts)	Added general sign standards that apply in the Village, added standards for specific type of signs that apply in the village, added standards that only apply in the village, including new design standards
17.57.070 Permanent signs in nonresidential districts.	17.80.080 (Standards for Specific Types of Signs); 17.80.090 (Sign Standards for Zoning Districts)	Tailored sign standards to each zoning district
17.57.080 Master sign program.	17.80.130 (Master Sign Program)	allow for variation in design of individual signs if signs contribute to a consistent visual theme within the property

Existing Code Section	Updated Code Section	Substantive Changes to Existing Code
17.57.090 Special signage for commercial sites located in geographically constrained areas.	17.80.090.B.7 (Low Visibility Areas)	No Change
17.57.095 Noncommercial signs in residential districts.	17.80.100 (Residential Signs)	Distinguished between single dwellings and multi-unit properties.
17.57.100 Maintenance and repair.	17.80.070 (General Sign Standards)	No substantive change
17.57.110 Lighting and illumination.	17.80.070 (General Sign Standards)	Illumination of residential signs is prohibited. Reference to specific foot candle illumination levels is removed. Internal illumination is permitted only when the portion of the sign that appears illuminated is the sign lettering, registered trademark, or logo.
17.57.120 Nonconforming signs.	17.80.140 (Nonconforming Signs)	Added detail on when nonconforming signs must be brought into conformance
17.57.130 Unsafe and unlawful signs.	17.80.150 (Violations and Enforcement)	Added detail on process for the removal of illegal signs.
17.57.140 Enforcement.	17.80.150 (Violations and Enforcement)	Added detail on process for the removal of illegal signs.
Chapter 17.60: CONDITIONAL USE PERMITS		
17.60.010 Purpose	17.124.010 (Purpose)	No changer
17.60.020 Required	Section 17.124.040 (When Required)	A conditional use permit is required only if the land use regulation table states that the use requires a conditional use permit

Existing Code Section	Updated Code Section	Substantive Changes to Existing Code
17.60.030 Considerations	Section 17.124.060 (Findings for Approval)	Added more specific findings that the Planning Commission must make to approve a conditional use permit.
17.60.040 Application	Section 17.124.030 (Application Submittal and Review) and Chapter 17.90 (Permit Application and Review)	Applications are submitted using a form prescribed by the Community Development Director
17.60.050 Fee	Chapter 17.112 (Permit Application and Review)	No substantive change
17.60.060 Accompanying maps and drawings	Chapter 17.112 (Permit Application and Review)	No substantive change
17.60.070 Hearing – Required	Section 17.124.050 (Public Notice and Hearing) and Chapter 17.148 (Public Notice and Hearing)	Added hearing requirements for Minor Use Permits
17.60.080 Hearing – Notice	Section 17.124.050 (Public Notice and Hearing) and Chapter 17.148 (Public Notice and Hearing)	References notice requirements in Zoning Code instead of Government Code
17.60.090 Expiration	17.156.080 (Time Limits and Extensions)	No change
17.60.100 Appeal – Fee	17.152 (Appeals)	No substantive change
17.60.110 Appeal – Procedure	17.152 (Appeals)	No substantive change
17.60.120 Revocation of permits	Section 17.156.110 (Permit Revocation)	Revised permit revocation provisions
17.60.130 Council review	-	Deleted

Existing Code Section	Updated Code Section	Substantive Changes to Existing Code
17.60.140 Amendments	17.156.070 (Changes to an Approved Project)	Section 17.156.070 identifies minor modifications to a conditional use permit allowed without a new application
17.60.150 Requirements for conversion of mobile home parks	Section 17.100 (Mobile Home Park Conversions)	No substantive change
17.60.160 Master conditional use permits – Tenant use permits	Section 17.124.100 (Master Use and Tenant Use Permits)	Removed details about appeals of tenant use permits
Chapter 17.63: ARCHITECTURAL AND SITE REVIEW		
17.63.010 Purpose.	17.120.010 Purpose	Revised to better reflect Design Review purpose
17.63.020 Architectural and site review committee.	17.120.050 Design Review Committee	Rnamed Design Review Committee. Changed role and composition of committee.
17.63.030 Required when.	17.120.030 When Required	Modified thresholds for projects requiring Design Permits. Added Minor Design Permit
17.63.035 Exemptions from design permit requirement.	17.120.030 When Required	Modified thresholds for projects requiring Design Permits. Added Minor Design Permit
17.63.040 Application.		Replaced with reference to standard application submittal requirements
17.63.050 Maps and drawings.	(17.120.040 (Application Submittal and Review)	Removed reference to specific submittal requirements
17.63.055 Visualization requirements.	(17.120.040 (Application Submittal and Review)	Removed reference to visualization guidelines
17.63.060 Fee.	17.112.030 (Application Fees)	No change

Existing Code Section	Updated Code Section	Substantive Changes to Existing Code
17.63.070 Design permit approval.	17.1120.030 (When Required)	Modified thresholds for PC approval of Design permits and CDD approval of Minor Design Permits
17.63.080 Hearing and notice.	17.120.060 (Public Notice and Hearing)	Added notice of pending decision notice procedure for minor design permits
17.63.090 Considerations in review of applications.	17.120.070 (Design Review Criteria)	Replaced with new design review criteria
17.63.100 Conditions.	17.090.070 (Conditions of Approval)	No change
17.63.110 Findings and decision.	17.120.080 (Findings for Aproval)	Replaced with new findings
17.63.120 Notification of approval.	17.156 (Post Decision Procedures)	No change
17.63.130 Time limitations on approval.	17.156 (Post Decision Procedures)	No change
17.63.140 Transfer of approval upon change in use.	17.156 (Post Decision Procedures)	No change
17.63.150 Conformance to approval and site supervision.	17.156 (Post Decision Procedures)	No change
17.63.160 Appeal to city council.	17.152 (Appeals)	No change
17.63.170 Hearing on appeal.	17.152 (Appeals)	No change
17.63.180 Revocation.	17.156 (Post Decision Procedures)	Revised permit revocation procedure
17.63.190 Council review.	-	deleted
17.63.200 Amendments.	17.156 (Post Decision Procedures)	No change

Existing Code Section	Updated Code Section	Substantive Changes to Existing Code
Chapter 17.66: VARIANCES		
17.66.010 Purpose	Section 17.128.010 (Purpose)	No substantive change
17.66.020 Variance in use prohibited	Section 17. 128.020 (Applicability)	Added that a variance may not allow deviation from the General Plan
17.66.030 Application	Section 17. 128.040 (Application Submittal and Review)	Referenced standard application procedures. Application form is as required by Community Development Department, not Planning Commission. Added that applicant must provide evidence that findings can be made.
17.66.040 Fee	Section 17. 128.040 (Application Submittal and Review)	No substantive change
17.66.050 Accompanying maps and drawings	Section 17. 128.040 (Application Submittal and Review)	Replaced with reference to standard application procedures
17.66.060 Hearing – Required	Section 17. 128.050 (Public Notice and Hearing)	No substantive change
17.66.070 Hearing – Notice	Section 17. 128.050 (Public Notice and Hearing)	No substantive change
17.66.080 Conditions	Section 17. 128.070 (Conditions of Approval)	No substantive change
17.66.090 Findings and decision	Section 17. 128.060 (Findings for Approval)	Revised to more closely match Government Code
17.66.100 Notice of grant	Section 17. 128.090 (Appeals and Post-Decision Procedures)	Replaced with reference to standard post-decision procedures

Existing Code Section	Updated Code Section	Substantive Changes to Existing Code
17.66.110 Expiration	Section 17. 128.090 (Appeals and Post-Decision Procedures)	Replaced with reference to standard post-decision procedures
17.66.120 Appeal – Fee	Section 17. 128.090 (Appeals and Post-Decision Procedures)	Replaced with reference to appeal procedures
17.66.130 Appeal – Hearing	Section 17. 128.090 (Appeals and Post-Decision Procedures)	Replaced with reference to standard public hearing procedures
17.66.140 Revocation	Section 17. 128.090 (Appeals and Post-Decision Procedures)	Replaced with reference to standard post-decision procedures
17.66.150 Council review	Section 17. 128.090 (Appeals and Post-Decision Procedures)	Replaced with reference to standard call for review procedures
17.66.160 Amendments	Section 17. 128.090 (Appeals and Post-Decision Procedures)	Replaced with reference to standard post-decision procedures
Chapter 17.69: AMENDMENTS		
17.69.010 Amendments covered by this chapter	17.114.010 (Purpose)	No substantive change
17.69.020 Initiation	17. 114.020 (Initiation)	Added that the Community Development Director can initiate an application
17.69.030 Application	17. 114.030 (Application)	Replaced with reference to standard application procedures
17.69.040 Hearing – Notice	17. 114.040.A (General)	Replaced with reference to standard public notice and hearing procedures
17.69.050 Hearing – Conduct	17. 114.040.A (General)	Replaced with reference to standard public notice and hearing procedures

Existing Code Section	Updated Code Section	Substantive Changes to Existing Code
17.69.060 Decision and report	17. 114.060 (Findings for Approval)	Revised findings for approval and timing requirements to match Government Code.
17.69.070 Failure to report	-	Deleted. Not in Government Code.
17.69.080 Council hearing and decision	17. 114.040.A (General)	Replaced with reference to standard public notice and hearing procedures
17.69.090 Withdrawal of petition	-	Deleted. Standard requirements for withdrawal of applications apply.
17.69.100 Refiling	-	Deleted. Standard requirements for resubmittal of denied application apply.
17.69.110 Remedial action	-	Deleted. Process for general plan amendments are specified in Government Code and are not addressed in Zoning Code.
17.69.120 Amendments to the local coastal program	-	Deleted.
Chapter 17.70: PROCEDURE FOR REASONABLE ACCOMMODATION		
17.70.010 Purpose	17.140.010 (Purpose)	No substantive change
17.70.020 Applicability	17140.020 (When Allowed)	No substantive change
17.70.030 Notice to the public of availability of accommodation process	17. 140.040 (Public Notice of Process Availability)	No change
17.70.040 Application requirements	17. 140.050 (Application Requirements)	Deleted specific required application contents. Added reference to Fee Schedule

Existing Code Section	Updated Code Section	Substantive Changes to Existing Code
17.70.050 Review authority	17. 140.060 (Review Procedures)	Added ability of Community Development Director to refer applications to Planning Commission.
17.70.060 Review procedure	17. 140.060 (Review Procedures)	No substantive change
17.70.070 Findings and decision	17. 140.060 (Review Procedures)	No substantive change
17.70.080 Appeal of determination	17. 140.090 (Appeals and Post-Decision Procedures)	Referenced appeal procedures that apply to all decisions
17.70.090 Severability	-	Deleted. Not necessary for individual chapters.
Chapter 17.72: NONCONFORMING USES		
17.72.010 Purpose.	17.92.010 (Purpose)	Revised to better reflect chapter purpose
17.72.020 Applicability.	17.92.020 (Applicability)	No substantive change
17.72.030 Definitions.	17.168 (Glossary)	Eliminates nonconforming activity concept – includes as part of nonconforming use.
17.72.040 Nonconforming activity regulations for unimproved lots.	17.92.050 (Nonconforming Use of Land)	Allows nonconforming use of land to continue provided it is not enlarged or expanded.
17.72.050 Continuing nonconforming activities (except in R-1 zones) on improved lots.	17.92.060 (Nonconforming Use of Structures)	Allows intensification of non-conforming use with Conditional Use Permit
17.72.060 Nonconforming activities and structures on improved R-1 parcels.	17.92.070 (Nonconforming Multi-Family Uses in the R-1 Zoning District)	Established new incentive program to improve nonconforming multi-family uses in R-1 zoning district

Existing Code Section	Updated Code Section	Substantive Changes to Existing Code
17.72.070 Permissible structural alterations.	17.92.080 (Nonconforming Structures)	Clarifies permitted alteration to nonconforming structure, allows certain alterations with CUP, allows replication of certain nonconforming single-family structures
17.72.080 Destruction by fire, explosion, flood or other disaster.	17.92.080 (Nonconforming Structures)	No change
17.72.090 Transient rental uses.	-	Deleted
Chapter 17.75: ZONING ANNEXED TERRITORY		
17.75.010 Procedure.	-	Deleted
Chapter 17.81: GENERAL REGULATIONS		
17.81.010 Applicability	-	Deleted
17.81.020 Planning commission records and amendments duties	17.08 (Interpretation)	Community Development Department maintains record of interpretations and determinations of Director, Planning Commission, and City Council in administration of Zoning Code
17.81.030 Rules governing use of maps and symbols	17.08 (Interpretation)	Community Director, not Planning Commission, resolves ambiguity in boundaries of zoning districts.
17.81.040 Rules governing open spaces	17.60.040 (Fences Adjacent to Soquel Creek Pathway and Grand Avenue Walkway)	Delete Sections A, B, C, and D. Maintain Sections E and F
17.81.050 Public facilities	-	Deleted

Existing Code Section	Updated Code Section	Substantive Changes to Existing Code
17.81.060 Animals	17.96.020 (Animal Keeping)	Eliminates maximum number of indoor pets. Adds general standards that apply to all pets. Identifies prohibited animals.
17.81.070 Height exceptions	17.48.020 (Height Measurement and Exceptions)	Added detail on permitted height and coverage of projections
17.81.080 Area exceptions	17.92,040 (Nonconforming Parcels)	No change
17.81.090 Sale of copies	-	Deleted
17.81.100 Service station lot area	-	Deleted – not needed
17.81.105 Self-service and partial-service gasoline stations	-	Deleted – obsolete regulations
17.81.110 Accessory structures	17.52.020.B.3 (Setback Exception)	Additional structure in setback allowed with Administrative Permit
17.81.120 Solar energy systems as a permitted use	17.96.160 (Solar Energy Systems)	Allows rooftop systems to exceed maximum permitted height by no more than 4 feet.
17.81.130 Solar energy systems as a conditional use	-	Deleted. Treated same as other accessory structures
17.81.140 Dish antennae prohibited	-	Deleted. Treated same as other accessory structures
17.81.150 Recovery of monitoring or deposit expenses	17.1222.030 (Permit Application and Review)	No change.
17.81.160 Extension of permit expiration dates	17.156.080 (Time Limits and Extensions)	Allows review authority to approve up to two two-year extensions (four years total)
17.81.170 Notice of public hearing	Chapter 17.148 (Public Notice and Hearings)	Clarifies requirements consistent with State law

Existing Code Section	Updated Code Section	Substantive Changes to Existing Code
17.81.180 Placement of utilities underground	17.96.120 (Placement of Underground Utilities)	No change
17.81.190 Yard/garage sales.	17.96.190 (Temporary Uses and Structures)	Clarified that only one block or neighborhood sale is permitted per calendar year
17.81.200 Home occupation permits and limitations	17.96.030 (Home Occupations)	Requires administrative permit. Added size limitation. Deleted public notice requirement. increased number of daily permitted client visits for personal instruction home-based businesses
Chapter 17.84: ENFORCEMENT		
17.84.010 Penalty for violation.	17.08.050 (Zoning Code Enforcement)	Replaced with reference to Municipal Code Title 4
17.84.020 Coastal Act violation.	-	Deleted
17.84.030 Allowing, advertising or arranging transient rental uses prohibited.	-	-
Chapter 17.87: HISTORIC FEATURES		
17.87.010 Procedure for establishing or designating historic feature designation.	Chapter 17.84 (Historic Preservation)	Distinguishes two types of historic resources: historic landmarks and the historic resource inventory. Adds certificate of appropriateness requirement for modifications to historic resources. Adds historic preservation incentives. Adds requirements for historic landmark demolitions.
17.87.020 Notice of hearing.	17.84.030 (Adding or Removing Historic Landmark Designation	No change

Existing Code Section	Updated Code Section	Substantive Changes to Existing Code
17.87.030 Hearing.	17.84.040 (Criteria for Designating Historic Landmarks)	Revised criteria of designating historic landmarks
17.87.040 Notice of designation.	-	Deleted
17.87.050 Entry in the register of historic features.	-	Deleted
Chapter 17.90: MOBILE HOME PARKS		
17.90.010 Findings and declarations of purpose.	17.100.010 (Purpose and Intent)	More directly states purpose and intent of chapter
17.90.020 Definitions.	17.100.030 (Definitions)	No change
17.90.025 Application and relocation impact report (RIR) – Duty to file.	17.100.040 (Relocation Impact Report)	No change
17.90.030 Contents of relocation impact report.	17.100.040 (Relocation Impact Report)	No change
17.90.040 Filing of relocation impact report.	17.100.040 (Relocation Impact Report)	No change
17.90.045 Refusal to review relocation impact report.	17.100.040 (Relocation Impact Report)	No change
17.90.050 Notice to new occupants regarding pending change in status of park.	17.100.050 (Notice to new occupants regarding pending change in status of park)	No change
17.90.060 Application for exemption from relocation assistance obligations.	17.100.060 (Exemption from relocation assistance obligations)	No change

Existing Code Section	Updated Code Section	Substantive Changes to Existing Code
17.90.070 Application for change of use – Public hearing – Findings.	17.100.070 (Application for change of use – Public hearing – Findings)	No change
17.90.080 Measures to prevent avoidance of relocation assistance obligations.	17.100.080 (Measures to prevent avoidance of relocation assistance obligations)	No change
17.90.090 Compliance with relocation assistance required as a condition of approval of a change of use.	17.100.090 (Compliance with relocation assistance)	No change
17.90.100 Modification and revocation of approved change of use.	17.100.100 (Modification and revocation of approved change of use)	No change
17.90.110 Expiration and extension of approval.	17.100.110 (Expiration and extension of approval)	No change
17.90.120 Change without new use.	-	Deleted. Not necessary since CUP is now required.
17.90.130 Preemption.	17.100.120 (Preemption)	No change
17.90.140 Severability.	17.100.130 (Severability)	No change
Chapter 17.93: PROHIBITION OF OFFSHORE OIL DEVELOPMENT SUPPORT FACILITIES		
17.93.010 Purpose.	-	Deleted. Background information and commentary not needed.
17.93.020 Findings.	-	Deleted. Background information and commentary not needed.

Existing Code Section	Updated Code Section	Substantive Changes to Existing Code
17.93.030 Implementation.	17.96.090 (Offshore Oil Development Support Facilities)	No change
17.93.040 Zoning changes.	-	Deleted. Background information and commentary not needed.
17.93.050 Effect of adoption.	-	Deleted. Background information and commentary not needed.
17.93.060 Severability.	-	Deleted. Background information and commentary not needed.
Chapter 17.95: ENVIRONMENTALLY SENSITIVE HABITATS		
17.95.005 General provisions.	17.64.020 (Applicability)	No change
17.95.010 General regulations.	17.64.030 (General Standards)	No change
17.95.020 Soquel Creek and lagoon.	17.64.040 (Soquel creek and Lagoon) and 17.52.030 (General Standards)	No change
17.95.030 Soquel Creek riparian corridor regulations.	17.64.030 (General Standards)	No change
17.95.040 Noble Gulch riparian corridor regulations.	17.64.030 (General Standards)	No change
17.95.050 Tannery Gulch riparian corridor regulations.	17.64.030 (General Standards)	No change

Existing Code Section	Updated Code Section	Substantive Changes to Existing Code
17.95.060 Soquel Creek – Escalona Gulch Monarch butterfly habitat regulations.	17.64.050 (Soquel Creek and Escalona Gulch Monarch Butterfly Habitat Areas) and 17.52.030 (General Standards)	No change
17.95.061 Escalona Gulch Monarch Butterfly Habitat – Additional regulations.	17.64.060 (Escalona Gulch Monarch Butterfly Habitat Areas) 17.52.030 (General Standards)	No change
Chapter 17.97: WATER-EFFICIENT LANDSCAPING		
17.97.010 Applicability.	17.72.020 Applicability	Chapter requirements now apply to construction of new primary structures and additions that increase the floor area of primary structures by 10 percent or more.
17.97.020 Purpose.	17.72.010 Purpose	No change
17.97.030 Architectural and site review required.	-	Deleted
17.97.040 Landscape design plan.	17.72.040 Landscape Plans	Provided more detail on required contents of a landscape plan
17.97.050 Irrigation design plan.	17.72.060.B Irrigation and Water Efficiency	No change
17.97.060 Plant selection.	17.72.060.A General Standards	Eliminated requirement to select plants from community development Director's approve planting list.
17.97.070 Use of turf.	17.72.060.A General Standards	No change
17.97.080 Soil conditioning and mulching.	17.72.060.D Maintenance	No change

Existing Code Section	Updated Code Section	Substantive Changes to Existing Code
17.97.090 Watering times.	17.72.060.A General Standards	No change
17.97.100 Water consumption.	-	Deleted. No practical for staff to monitor and enforce.
17.97.110 Decorative use of water.	17.72.060.A General Standards	No change
17.97.120 Provisions for existing landscapes.	17.72.060.E Irrigation Audit	Clarified audit must be submitted to Community Development Department.
Chapter 17.98: WIRELESS COMMUNICATIONS FACILITIES		
17.98.010 Purpose.	17.104.010 (Purpose)	No change
17.98.020 Definitions.	17.104.020 (Definitions)	Removed terms not used in ordinance. Added new terms.
17.98.030 Applicability.	17.104.030 (Applicability)	Added that chapter does not apply to certain temporary facilities
17.98.040 Approval process and noticing.	17.104.040 (Permits and Approvals)	Requires Minor Use Permit and Minor Design Permit for certain facilities, and Conditional Use Permit and Design Permit for all others. Added new process to allow modifications to existing facilities with an Administrative Permit as required by new Section 6409(a) Modification rules.
17.98.050 Revocation of approval.	17.104.040 (Permits and Approvals)	No change
17.98.060 Pre-application.	-	Deleted. Pre-application conference is recommended for all permits in Chapter 17.88
17.98.070 Submittals.	17.104.040 (Permits and Approvals)	Identifies specific materials that may be required based on the scope of the project; revised list of submittal requirements

Existing Code Section	Updated Code Section	Substantive Changes to Existing Code
17.98.080 General requirements.	17.104.060 (Development Standards)	Identifies “non-preferred locations” rather than “restricted locations” Detailed landscaping standards replaced with general statement that landscaping will be provided when necessary to screen from view. Added building-concealed facilities as a preferred type of facility.
17.98.090 Location standards.	17.104.050 (Location Standards)	Deleted setback from restricted zoning district provision, replaced with setback requirement from dwelling unit.
17.98.100 Preferred antenna siting and mounting techniques.	17.104.080 (Antenna Siting and Mounting Techniques)	Added building-concealed as a preferred technique
17.98.110 Facade-mounted wireless telecommunication facilities.	17.104.080 (Antenna Siting and Mounting Techniques)	No change
17.98.120 Roof-mounted wireless telecommunications facilities.	17.104.080 (Antenna Siting and Mounting Techniques)	No change
17.98.130 Ground-mounted wireless telecommunication facilities.	17.104.080 (Antenna Siting and Mounting Techniques)	No change
17.98.140 Freestanding monopole wireless telecommunication facilities.	17.104.080 (Antenna Siting and Mounting Techniques)	No change
17.98.150 Setbacks and projections into yards.	17.104.060 (Development Standards)	No change
17.98.160 Projections into public rights-of-way.	17.104.060 (Development Standards)	No change
17.98.170 Number of antennas and facilities permitted.	17.104.060 (Development Standards)	No change
17.98.180 Noise.	17.104.100 (Operational Standards)	No change

Existing Code Section	Updated Code Section	Substantive Changes to Existing Code
17.98.190 Interference.	17.104.060 (Development Standards)	No change
17.98.200 Maintenance and safety.	17.104.060 (Development Standards)	No change
17.98.210 Cessation of operation on-site.	17.104.060 (Development Standards)	No change
17.98.220 Transfer of ownership.	17.104.040 (Permits and Approvals)	No change
17.98.230 Preexisting and nonconforming wireless communications facilities.	17.104.110 (Miscellaneous Requirements)	Eliminated process for removal of preexisting nonconforming facilities, maintained ability for facility to remain until lease expires.
17.98.240 Length of approvals.	17.104.040 (Permits and Approvals)	Increased to 10 years for initial approval as required by State law
17.98.250 Change in federal or state regulations.	17.104.100 (Operational Standards)	No change
17.98.260 Indemnity and liability.	-	Deleted
17.98.270 Review of ordinance.	-	Deleted
17.98.280 Severability.	17.104.120 (Severability)	No change
Chapter 17.99: SECONDARY DWELLING UNITS		
17.99.010 Definitions.	17.160 (Glossary)	No change
17.99.020 Purpose.	17.74.010 (Purpose)	No change

Existing Code Section	Updated Code Section	Substantive Changes to Existing Code
17.99.030 Locations permitted.	17.74.020 (Permitted Locations)	Allows secondary dwelling units on parcels in RM and MU zoning districts occupied by one single-family dwelling
17.99.040 Permit procedures.	17.74.030 (Required Permits)	Doesn't allow deviations from certain design and development standards with a Conditional Use Permit and Design Permit.
17.99.050 Findings required for architecture and site review permitted secondary dwelling units.	17.74.050 (Permitted Locations)	No change
17.99.060 Design and development standards.	17.74.040 (Design and Development Standards)	Removes requirement that the property owner occupy either the primary residence or the secondary dwelling unit; allows two story secondary dwelling units; reduced minimum rear yard setback to 4 feet for single-story units with reduced minimum height when close to property line
17.99.070 Deed restrictions.	17.74.060 (Deed Restrictions)	No change
17.99.080 Zoning incentives.	17.74.070 (Incentives)	No change

1240		
The Planning Commission direction in light blue. City Council additional direction in underlined in dark blue. If there is an X under the CC column but no dark blue, the City Council made no modifications to the PC recommendation.	**Direction**	
	PC	**CC**
ISSUE 1: Protecting the Unique Qualities of Residential Neighborhoods (Page 7) **PC review 7/20/2015 CC review 10/19/2015**		
Option 1: Maintain existing R-1 standards for all neighborhoods.		
Option 2: Introduce tailored development standards for individual residential neighborhood.		
Option 3: Allow case-by-case deviations to R-1 standards.		
New Option: Introduce additional standards/exceptions based on lot characteristics and existing development patterns. • Retain 25 feet height limit • 27 feet height exception for the following circumstances: o Addition to historic structures that is designed to match the roof pitch of the historic structure within the area of new addition. o Lots greater than 6,000 sf in size o Lots with width 60 feet wide or more. o Lots on a steep slope. Steep slope is defined as a lot having an average slope of 25% or greater. o Max plate height of structure does not exceed 22 feet. • Retain current requirement for second story setbacks at 15 % of lot width o Add exception to second story setback for lots that are 30 feet wide or less. • Secondary Structure in Rear Yard o Decrease rear yard setback from 8 feet to 4 feet. o Maintain 17.15.140.G "The width of detached garages or carports in the rear yard is limited to twenty-one feet. The height is limited to fifteen feet (nine feet to the top of the wall plate) for secondary structures located a minimum of 8 feet from the rear property line. However, the planning commission may approve an exception to allow additional height if necessary to match the architectural style of the existing primary structure." o Secondary Structures less than 8 feet from the side yard may not exceed 12 feet in height. o Maintain required 2 foot landscape buffer between driveway and property line. o Maintain front setback (40 feet), side yard setback (3 feet) and setback from primary structure (3 feet) o Add statement in residential zoning districts an existing garage located within the required setback areas are legal non-conforming structures that may be updated but the non-conformity may not be expanded.	X	X

Issues and Options Matrix		
The Planning Commission direction in light blue. City Council additional direction in underlined in dark blue. If there is an X under the CC column but no dark blue, the City Council made no modifications to the PC recommendation.	**Direction**	
	PC	**CC**
ISSUE 2: Maintaining and Enhancing the Village Character (Page 8) **PC and CC reviewed 4/30/2015**		
Option 1: Maintain existing standards with advisory design guidelines.		
Option 2: Establish new building form and character standards. The Zoning Code will establish mandatory site and building standards to maintain and enhance the Village character. These would apply to non-residential and mixed-use development. New standards could address the following design concepts: • Maximum setbacks to keep buildings and their entrances close to the sidewalk. • Permitted treatment of setback areas (e.g., plazas and landscaping, no parking) • Minimum building width at street edge (defined as percentage of lot width) to maintain a continuous presence of storefronts. • Buildings oriented towards a public street with a primary entrance directly accessible from the sidewalk. • Maximum length of unarticulated/blank building walls. • Required storefront transparency (percentage clear glass) • Maximum building/storefront width (require larger buildings to be broken down into a pedestrian-scale rhythm with individual building bay widths) • Surface parking location (at rear or side of buildings, not between a building and a street-facing property line). • Frequency and width of driveways crossing sidewalks. • Requirements or incentives for residential front porches.	X	X
Option 3: Incorporate design guidelines as standards in the Zoning Code. • Incorporate applicable design criteria from the Central Village Design Guidelines into the Zoning Code update.	X	X
Option 4: Remove reference to Central Village Design Guidelines. • This modification would require applicants to follow the development standards in the code without any guidance from the guidelines. The guidelines would be repealed during the zoning code update. The reference could be reintroduced after the City prepared updated design guidelines for the Village	X	X
Notes:		

1240		
The Planning Commission direction in light blue. City Council additional direction in underlined in dark blue. If there is an X under the CC column but no dark blue, the City Council made no modifications to the PC recommendation.	**Direction**	
	PC	**CC**
ISSUE 3: Accommodating High-Quality Development on 41st Avenue (Page 10) **PC review 5.18.2015**		
Option 1: Maintain Existing Regulations.		
Option 2: Increase Parking Flexibility. • Allow greater commercial parking flexibility through shared parking studies for multi-tenant commercial properties • Residential mixed with office space may be considered within shared parking study. • Residential mixed with commercial/restaurant/entertainment is problematic due to overlap in demand on parking.	X	X
Option 3: Create incentives for desired improvements.		
Option 4: Strengthen connection to 41st Avenue Design Guidelines.		
Option 5: Streamline Permitting Process. • Allowing commercial uses to occupy existing commercial spaces up to XXX square-feet without a CUP (limit to be established in draft code) • Only requiring a design permit for large commercial uses which involve significant exterior modifications (to be defined in draft code) • Create administrative permits and minor use permits	X	X
Notes from 5.18.2015 Planning Commission meeting: • Repeal existing 41st Ave design guidelines until such time that they can be comprehensively updated. Incorporate applicable design criteria from the 41st Ave Design Guidelines into the Zoning Code update.		

1240		
The Planning Commission direction in light blue. City Council additional direction in underlined in dark blue. If there is an X under the CC column but no dark blue, the City Council made no modifications to the PC recommendation.	**Direction**	
	PC	**CC**
ISSUE 4: Protecting Retail Vitality on 41st Avenue (Page 11) **PC review 5.18.2015**		
Option 1: Maintain existing regulations.		
Option 2: Add new findings for professional and medical office uses. • Only partial support • New findings for professional and medical office use must be objective and measurable; not nebulous.	**Partial support**	X
Option 3: Encourage professional and medical office uses in certain locations. • Planning Commission supported increase flexibility in office space in general. Directed staff to principally permit office space up to a newly established limit south of Capitola Road and require conditional use permit for new retail conversions to office north of Capitola Road. • Support Office on 2nd and 3rd story as principally permitted without size limitations in all commercial areas.	X	X
Option 4: Introduce new limitations for professional and medical office uses.		
Issue #5: Parking (Page 12)		
Issue #5A: Number of Required Parking Spaces (Page 13) **PC review 5.18.2015 CC review 10.19.2015**		
Option 1: Maintain Existing Requirement.		PENDING
Option 2: Modify Parking Requirements for Certain Land Uses in All Areas.		
Option 3: Create Location-Based Parking Standards. • The updated Zoning Code will establish location based parking requirements for the different commercial districts within the City, including neighborhood commercial, community commercial, central village, and industrial. • The central village parking standards will not change. CC: Modify existing 6 seat allowance for restaurant to a square foot allowance for dining area. Decrease required parking requirement for area not utilized for dining. • Single-family residential parking standards will not change. CC: max covered parking 1 space for single-family	X	X
Option 4: Allow parking reductions for multi-tenant commercial uses with Planning Commission approval. • Retain reductions in the number of required parking spaces for multi-tenant commercial developments supported by a parking study. Exclude mixed-use projects that contain residential. CC: Allow residential mixed use in CC (Bay Avenue and 41st Avenue) • All reductions require approval by Planning Commission after making special findings. • Finding that adequate parking is provided on-site as demonstrated by a parking study and reduction does not result in spillover parking impacts on neighborhoods.	X	X

1240		
The Planning Commission direction in light blue. City Council additional direction in underlined in dark blue. If there is an X under the CC column but no dark blue, the City Council made no modifications to the PC recommendation.	**Direction**	
	PC	**CC**
Option 5: Allow for reductions By-Right.		
Issue #5: Parking (continued)		
Issue #5B: Village Hotel Parking (Page 15) **PC review 5.18.2015 CC review on 10/19/2015**		
Option 1: Maintain Existing Requirements		
Option 2: Specific On-Site Parking standard for Village Hotel.		
Option 3: Base Standard on a Parking and Traffic Study prepared for the hotel development project application. • The number of parking spaces required for the theater hotel site will be determined by a parking and traffic study prepared specifically for the hotel development project application. • The site is unique and therefore flexibility is necessary to create a parking demand management plan that works specific to theater site.	X	X
Option 4: Allow Planning Commission and/or City Council to establish parking standards for an individual project based on performance criteria.		
Notes: Aside: PC request for CC to reconsider employee parking program in the City parking facilities to decrease impact on residents during winter months. CC would like to revisit the in-lieu program to include more land use types.		
Issue #5: Parking (continued)		
Issue #5C: Parking Efficiency (Page 16) **PC review 5.18.2015 CC review on 10/19/2015**		PENDING
Option 1: Maintain existing regulations.		
Option 2: Clarify existing code to match past practice, including:		
A: Add New Shared Parking Provision. • The updated Zoning Code will allow multiple land uses on a single parcel or development site to use shared parking facilities when operations for the land uses are not normally conducted during the same hours, or when hours of peak use differ. • Excludes residential CC: Allow residential mixed use in CC (Bay Avenue and 41st Avenue)	X	X
B: Add new parking lift provisions. • The updated Zoning Code will allow for elevator-like mechanical system to stack parking spaces in a vertical configuration. • Lift must be enclosed/not visible from public view.	X	X

1240		
The Planning Commission direction in light blue. City Council additional direction in underlined in dark blue. If there is an X under the CC column but no dark blue, the City Council made no modifications to the PC recommendation.	**Direction**	
	PC	**CC**
Issue #5D: Garages (Page 17) **PC review 5.18.2015 CC review 10.19.2015**		PENDING
Option 1: Maintain existing regulations.		
Option 2: Add design standards for carports. • Continue to require at least one covered parking space for homes 1,500 square feet or more. Covered parking may be provided in a garage or carport. • Design standards for carports will be added. • Carport should be the exception with findings to support the exception • Include Carport in FAR calculation.	X	X
Option 3: Limit covered spaces to garages only.		
Option 4: Eliminate covered parking requirement.		
Notes:		
Issue #6: Historic Preservation (Page 17) **PC review 5.21.2015**		PENDING
Option 1: Establish a Historic Resources Board.		
Option 2: Establish a new Historic Preservation Overlay Zone.		
Option 3: Establish new enforcement and penalty provisions.		
Option 4: Establish new maintenance and upkeep provisions.		

Planning Commission Notes:
• Incorporate the 5 new provisions identified in the issues and options summary, including
  o Procedures to identify historic resources
  o Improve criteria to identify historic resources
  o Add procedures and review criteria for projects which involve potentially significant resources.
  o Add criteria to approve demolition of a historic resource.
  o Add incentives for historic preservation.
• Do not include any of the additional options.
• As the new historic preservation ordinance is drafted, have Architectural Historian, Leslie Dill, and local Historian, Frank Perry, review the draft ordinance.
• Follow-up: CC would like to see money budgeted for following year for historic inventory
	X	X

1240		
The Planning Commission direction in light blue. City Council additional direction in underlined in dark blue. If there is an X under the CC column but no dark blue, the City Council made no modifications to the PC recommendation.	**Direction**	
	PC	**CC**
Issue 7: Signs (Page 19)		
A. Threshold for Review **PC Review on 4/30/2015 and CC Review 4/30/2015 and 11/12/2015**		
Option 1: Maintain existing regulations.		
Option 2: Allow staff-level review with new standards. • Revise sign standards to include new, well-defined and well-illustrated design standards that create new maximum allowances within staff-level administrative review. Signs can be approved administratively within an over-the-counter permit. • Include an option for Planning Commission review for signs that go beyond the maximum administrative review allowance. • Ensure high quality signs within new standards.	X	X
Notes:		
B. Tailored Standards (Page 19) **PC Review on 4/30/2015 and CC Review 4/30/2015 and 11/12/2015**		
Option 1: Maintain existing regulations.		
Option 2: Create tailored standards for different commercial areas. • Sign standards will be adjusted to address the unique character of different commercial areas. Tailored standards will include types of permitted signs, maximum sign area, sign dimensions, sign location and placement, illumination, materials, and other place appropriate standards. • The general desired signage character for different districts in Capitola could be as follows: o Village: Pedestrian oriented signs, village scale o Neighborhood Commercial: Neighborhood-scale signs serving pedestrians and vehicles o 41st Avenue: Larger-scale, auto-oriented signs to support corridor as a regional shopping destination. o Auto Plaza Drive: Unique to the use (auto-dealers) and address visibility challenges o Industrial Zone (Kennedy Drive): More industrial design aesthetic and flexibility of type and materials.	X	X
Notes:		

1240		
The Planning Commission direction in light blue. City Council additional direction in underlined in dark blue. If there is an X under the CC column but no dark blue, the City Council made no modifications to the PC recommendation.	**Direction**	
	PC	**CC**
Issue 7: Signs (continued)		
C. Monument Signs (Page 20) **PC Review on 4/30/2015 and CC Review 4/30/2015 and 11/12/2015**		
Option 1: Maintain existing regulations.		
Option 2: Create a new limit for monument signs based on linear frontage along a prime commercial street.		
Option 3: Create an allowance for more than 4 tenants per monument sign.		
Option 4: Update Master Sign Plan to clarify discretion in monument signs (lot size, # of tenants, and frontage).		
New Option • Preference for monument signs to be drafted into tailored standards for each commercial zone. • Update to allow digital gas pricing signs.	X	X
Issue 8: Non-Conforming Uses (Page 20) **PC Review 7/20/2015 and CC Review 10/26/2015**		
A. Calculation of Structural Alterations (Page 21)		
Option 1: Maintain the existing 80 percent building valuation maximum of present fair market value.		
Option 2: Maintain valuation cap but allow the Planning Commission to authorize additional alterations if specific findings can be made.		
Option 3: Remove valuation cap for structural alterations to non-conforming structures. • Non-conforming structures may be rebuilt with the approval of a non-conforming permit issued by the Planning Commission. • To approve a non-conforming permit, the Planning Commission must make a finding that the existing non-conforming structure does not have a negative impact on adjacent properties, the surrounding neighborhood, or the public. • Alterations to non-conforming structure may not increase the degree of non-conformity. • Any addition to a non-conforming structure would be required comply with all development standards of the zone.	X	X
Option 4: Change building valuation cap to a percentage of square footage calculation.		
Option 5: ~~Maintain the existing 80% threshold with~~ new exception for historic resources.		
Notes: Historic structures that do not comply with height, setbacks, floor area ratio, or parking standards may be reconstructed with the existing non-conformity as long as the structure is not modified or enlarged and the property exists in its entirety within the property lines of the site.		X

1240		
The Planning Commission direction in light blue. City Council additional direction in underlined in dark blue. If there is an X under the CC column but no dark blue, the City Council made no modifications to the PC recommendation.	**Direction**	
	PC	**CC**
Issue 8: Non-Conforming Uses (Continued)		
B. Non-conforming activities and structures on improved R-1 parcels. (Page 22)		
Option 1: Maintain existing sunset clause and opportunity to apply for extension. • Require upgrades to mitigate impacts. • Extensions are issued for 25 years maximum. • Applicant must agree to participate in a future assessment district to mitigate impacts of multifamily. Confirm with City attorney that this condition is legal. • Update code to include that the extension is publicly noticed and notice is sent to neighbor within 300 feet.	X	X
Option 2: Modify regulations to allow non-conforming multi-family uses to remain throughout the City, but not intensify.		
Option 3: Modify regulations to allow non-conforming multi-family uses to remain in targeted areas of the City.		
Option 4: Rezone areas with existing non-conforming multi-family uses to a multi-family zone. • Rezone condominiums at Opal Cliff East and West to multi-family. • Rezone affordable housing development behind Coastal Life Church on Monterey Avenue to multi-family.	X	X
Option 5: Create an incentive program to allow participating non-conforming property owners to retain their uses subject to providing specified public benefits. • City to work with City Architect to create design solutions to front facades and parking for typical four-plex. • Create incentives for applicants to apply for extension and improve their property prior to sunset clause. • Create a list of options for improvements that create more certainty within the extension process.	X	X
Notes:		

1240		
The Planning Commission direction in light blue. City Council additional direction in underlined in dark blue. If there is an X under the CC column but no dark blue, the City Council made no modifications to the PC recommendation.	**Direction**	
	PC	**CC**
Issue 9: Secondary Dwelling Units (Page 24) **PC June 22, 2015 and CC October 27, 2015**		
Option 1: Maintain existing code allowances/limitations for secondary dwelling units.		
Option 2: Amend the code to encourage development of additional secondary dwelling units.		

• Eliminate the current residency requirement and allow both the primary and secondary dwellings to be rented.
• Allow secondary dwelling units to be built at the reduced setbacks for accessory structures (4' from rear property line) with reduced height limit (12' maximum). Administrative permit. The City Council was split on the decreased setback for secondary structure to 4'. Request to re-evaluate within draft ordinance.
• Create opportunity for secondary dwelling units above a garage.
  • Must comply with all development standards.
  • No decreased setbacks for attached garage with second story.
  • Require approval by Planning Commission. City Council request to reevaluate permitting process for secondary units above garage within draft ordinance.
	X	X

Option 3: Amend the code to encourage development of additional secondary dwelling units in specific areas of the City only.		
Notes:		

1240		
The Planning Commission direction in light blue. City Council additional direction in underlined in dark blue. If there is an X under the CC column but no dark blue, the City Council made no modifications to the PC recommendation.	**Direction**	
	PC	**CC**
Issue 10: Permits and Approvals (Page 24) **PC and CC review on 4/30/2015**		
Option 1: No change to existing permits.		
Option 2: Modify permits. With this option staff will look for opportunities to combine, delete, and add permits in the zoning code to better meet the city's needs. Possible changes include the following:		
a. Create a new Administrative Permit. • Create administrative permit for a wide range of existing, ministerial staff-level actions. • Include: fence permits, temporary sign permits, approvals of temporary sidewalk/parking lot sales, and temporary storage.	X	X
b. Create a new Minor Use Permit. • A new minor use permit will be created similar to a Conditional Use Permit except that it will be approved by Community Development Director. • Notice will be mailed to neighbors prior to final action by Community Development Director and decisions could be appealed to Planning Commission. • The Director could also choose to refer applications to Planning Commission for decision. • Include: home occupancy permit and transient occupancy permits.	X	X
c. Create a New Substantial Conformance Process. • A substantial conformance process will be developed to allow administrative approval of specified minor alterations while still requiring Planning Commission consideration of more substantive changes.	X	X
Notes:		

1240		
The Planning Commission direction in light blue. City Council additional direction in underlined in dark blue. If there is an X under the CC column but no dark blue, the City Council made no modifications to the PC recommendation.	**Direction**	
	PC	**CC**
Issue 11: Architecture and Site Review (Page 25) **PC review 6/22/2015**		
A. Authority of Architecture and Site Review Committee (Page 25)		
Option 1: Maintain existing authority of Architecture and Site Committee.		
Option 2: Modify existing role of the Architecture and Site Committee.		
Option 3: Eliminate the Architecture and Site Committee.		
Notes: • ~~Replace~~/Rename the Arch & Site committee to reflect function as development review committee. • Function: review applications and make preliminary recommendations to applicant prior to Planning Commission review.	X	X
B. Timing of Design Permit Review (Page 26)		PENDING
Option 1: Maintain existing timing of Architecture and Site Review.	X	X
Option 2: Repurpose the committee to be a pre-design committee.		
Notes:		
C. Composition of Architecture and Site Committee (Page 26)		PENDING
Option 1: Maintain the existing composition of the Architecture and Site Committee.		
Option 2: Replace the committee with a City Architect.		
Option 3: Replace committee with an Architectural Peer review committee.		
Option 4: Revise committee as follows: • ~~All positions on committee to be either staff or contracted long-term consultant on as-needed basis.~~ • City to contract Architect to review substantial projects. Threshold for "substantial" to be determined. • City to continue requiring review of historic modifications by contracted Architectural Historian outside of Arch and Site committee. • Committee to include: o Architect (Contracted Consultant) for substantial projects. o Landscape Architect (Appointed) o Historian (Appointed) o Staff Planner, Public Works, and Building representatives.	X	X
Notes:		

1240		
The Planning Commission direction in light blue. City Council additional direction in underlined in dark blue. If there is an X under the CC column but no dark blue, the City Council made no modifications to the PC recommendation.	**Direction**	
	PC	**CC**
Issue 12: Design Permits (Page 27) **PC and CC review on 4/30/2015**		
A. When a Design Permit is Required – Commercial Uses (Page 27)		
Option 1: Maintain existing thresholds.		
Option 2: Require Design Permits only for Exterior Modifications. With this option, a design permit would be required to establish a new use only with an exterior modification to the structure. All other commercial design permit thresholds would remain the same.		
Option 3: Require Design Permit only for Larger Projects. • Design permit thresholds will be created to allow minor modifications to commercial buildings without requiring review by Arch and Site and Planning Commission.	X	X
Notes:		
B. Design Permit Approval Authority – Commercial Use (Page 27) **PC and CC review on 4/30/2015**		
Option 1: Maintain existing review authority.		
Option 2: Delegate limited approval authority to the Director. • The Director will be given the authority to approve the following types of commercial projects: o Minor repairs, changes and improvement to existing structures which use similar, compatible or upgraded quality building materials. o Additions not visible from the front façade up to a specified square-footage threshold. o Expansion of one tenant space into a second tenant space in a multi-tenant building. o Accessory structures including garbage and recycling enclosures.	X	X
Notes:		
C. When a Design Permit is Required – Residential Uses (Page 28) **PC and CC review on 4/30/2015**		
Option 1: Maintain existing thresholds.		
Option 2: Modify threshold for residential design permits, as follows: • Allow first story additions (unlimited) that are located on the back of an existing home and comply with all standards of the code. • Allow minor additions to the front of a building that upgrade the front façade and comply with all standards of the code. Minor additions could include enclosing recessed entrances, enclosing open front porches, and installation of bay windows.	X	X

1240		
The Planning Commission direction in light blue. City Council additional direction in underlined in dark blue. If there is an X under the CC column but no dark blue, the City Council made no modifications to the PC recommendation.	**Direction**	
	PC	**CC**
D. Design Permit Approval Authority – Residential Use (Page 29) **PC and CC review on 4/30/2015**		
Option 1: Maintain existing review authority.		
Option 2: Delegate limited approval authority to the Director • Establish new thresholds for administrative approval by Community Development Director	X	X
Notes:		
Issue 12: Design Permits (continued)		
E. Consideration for Design Permit Approval (Page 29) **PC and CC review on 4/30/2015**		
Option 1: Maintain existing architecture and site considerations.		
Option 2: Maintain the existing architecture and site considerations with additional considerations focused on design, • Include massing, height, scale, articulation, neighborhood compatibility, privacy, quality exterior materials.	X	X
Option 3: Update design considerations to focus on design rather than including ancillary issues.		
Notes:		
Issue 13: Planned Development (Page 30) **PC review on 6/22/2015**		PENDING
Option 1: Maintain existing regulations.		
Option 2: Reduce or eliminate minimum parcel size requirement. • Eliminate minimum parcel size requirement. • Exclude PD from Single-Family zone.		X
Option 3: Modify approval process.		
Option 4: Eliminate PD. • ~~City is largely built out and little opportunity exists for PD.~~ • ~~Existing zoning results in more compatible development~~	X	
Notes:		

1240		
The Planning Commission direction in light blue. City Council additional direction in underlined in dark blue. If there is an X under the CC column but no dark blue, the City Council made no modifications to the PC recommendation.	**Direction**	
	PC	**CC**
Issue 14: Environmental and Hazard Overlays (Page 30) **PC and CC review on 4/30/2015**		
Option 1: Maintain existing overlays and clarify boundaries.		
Option 2: Modify existing overlays. This option would modify existing overlays as described below: • **Archaeological/Paleontological Resources (APR)**. Eliminate this overlay zone. Continue to require the preparation of an archaeological survey report and mitigation plan for any project which disturbs native soils in an area with a probability of containing archaeological resources. Continue to address issue through CEQA process. • **Automatic Review (AR)**. Remove this overlay zone as it duplicates current process. • **Coastal Zone (CZ)**. Maintain this overlay zone as required by State law. • **Floodplain (F)**. Move existing Chapter 17.50 (Floodplain District) out of the zoning code and remove the floodplain overlay boundaries from the zoning map. Floodplain regulations are administered by the Building Official, not the Community Development Director, and should be located in Title 15 (Buildings and Construction), not the zoning code. The boundaries of this overlay should not be included in the zoning map, as they are based on FIRM maps which are frequently changing, particularly with rising seas. • **Geological Hazards (GH)**. Eliminate this overlay zone and replace with citywide standards for proposed development in beach areas, bluff and cliff areas, landslides-prone areas, and steep slope areas • **Chapter 17.95 (Environmentally Sensitive Habitats)**. Map boundaries of these areas as a new overlay zone and maintain existing regulations.		
Option 3: Create a new, consolidated environmental/hazards overlay. This option would merge the overlays into one new environmental/hazards overlay. The zoning code would state that proposed development within these areas could be subject to additional standards and limitations. The Coastal Zone overlay would remain as a separate overlay. This option could be combined with the creation of new citywide standards that would address geological hazards, flood hazards, sensitive habitat, and archaeological/paleontological resources.		
Notes: Staff to Simplify the overlays utilizing the best approach. Likely option 2, but top concern is simplicity for applicants and administration.	Hybrid	Hybrid

1240		
The Planning Commission direction in light blue. City Council additional direction in underlined in dark blue. If there is an X under the CC column but no dark blue, the City Council made no modifications to the PC recommendation.	**Direction**	
	PC	**CC**
Issue 15: Visitor-Serving Uses on Depot Hill (Page 31) **PC on 5/21/2015 and CC on 10/26/2015**		PENDING
Option 1: Maintain existing permitted uses.		
Option 2: Modify permitted use in Land Use table for Monarch Cove property in VS Zone. • Land uses to be modified as follows: A. Accessory structures and accessory uses appurtenant to any conditionally allowed use; B. Hotels, motels, hostels, inns; bed and breakfast lodging; C. Food service related to lodging; ~~D. Assemblages of people, such as festivals, not exceeding ten days and not involving construction of permanent facilities;~~ E. Accessory structures and uses established prior to establishment of main use or structure; F. Habitat restoration; habitat interpretive facility; ~~G. Live entertainment;~~ H. Public paths; ~~I. Business establishments that provide commercial places of amusement or recreation, live entertainment, or service of alcoholic beverages and that are located within two hundred feet of the boundary of a residential district;~~ J. Weddings; K. Business establishments that sell or dispense alcoholic beverages for consumption upon the premises; ~~L. Other visitor-serving uses of a similar character, density, and intensity as those listed in this section and determined by the planning commission to be consistent and compatible with the intent of this chapter and the applicable land use plan;~~ M. Offices and limited retail use, accessory to visitor-serving uses; N. One caretaker unit for the purpose of providing on-site security; O. Access roadway; P. Residential use by the owners and their family members of up to one unit per parcel on the three parcels, as long as a minimum of six guest bedrooms are available for visitor-serving use within the three parcels; ~~Q. Non-family residential use during the off-season months (November through April). (Ord. 886 § 3, 2005)~~ R. Add multi-family as a CUP	X	X
Option 3: Limit intensity of visitor accommodation uses.		
Option 4: Rezone ~~to R-1.~~ • VS/R-1 on El Salto and Monarch Cove Property • Dedicated Coastal Access path along bluff. • ~~Eliminate VS zoning on the El Salto property~~ • Eliminate Automatic Review from the parcels to the East of the El Salto property. • The General Plan must be amended to reflect this direction.	X	X
Notes:		

1240		
The Planning Commission direction in light blue. City Council additional direction in underlined in dark blue. If there is an X under the CC column but no dark blue, the City Council made no modifications to the PC recommendation.	**Direction**	
	PC	**CC**
Issue 16: Height (Page 32)		PENDING
A. Residential Neighborhoods (Page 32) **PC review on 5/21/2015 and 7/20/2015 CC 10.19.2015**		
Option 1: Maintain existing standards.		
Option 2: Eliminate 27-foot exception. This option would eliminate the 27-foot height exception by requiring all buildings to meet either a 25-foot or 27-foot height standard.		
Option 3: Allow greater variation based on existing neighborhood character. This option would allow greater variation in permitted building height based on neighborhood characteristics. There are a number of different ways to achieve this as described in Issue #1.		
Notes: During the 5/21/2015 meeting, the Planning Commission requested this item be brought back during the future neighborhood character (Issue 1) discussion. The following is the direction provided at 7/20/2015 Planning Commission meeting. o 25 feet height limit o 27 feet height exception for the following circumstances: • Addition to historic structures that is designed to match the roof pitch of the historic structure within the area of new addition. • Lots greater than 6,000 sf in size • Lots with width 60 feet wide or more. • Lots on a steep slope. Steep slope is defined as a lot having a slope of 25% or greater. • Max plate height of structure does not exceed 22 feet.	X	X
B. Capitola Village (Page 33) **PC review on 5/21/2015 CC 10/19/2015**		
Option 1: Maintain existing standard. • Maintain existing height limit of 27 feet in the Central Village • Include exception up to 31 feet for non-habitable space such as elevator, architectural features, and roof designs with architectural interest. Current exception §17.81.070. • Show examples of architectural features in code (cupolas, turrets, chimneys, etc.)	X	X
Option 2: Expand exception provisions.		
Option 3: Increase maximum height limit to accommodate 3 stories.		
Notes:		

1240		
The Planning Commission direction in light blue. City Council additional direction in <u>underlined</u> in dark blue. If there is an X under the CC column but no dark blue, the City Council made no modifications to the PC recommendation.	**Direction**	
	PC	**CC**
Issue 16: Height (continued) **PC review on 5/21/2015** **CC on 10.19.2015**		PENDING
C. Hotel (Page 33)		
Option 1: Apply CV Zone Standard to Hotel.		
Option 2: Establish ~~Performance~~ Qualitative Standard for Hotel Height tied to General Plan. • Future height of hotel must be aligned with the guidance in the General Plan • A future hotel on the unique parcel should not be tied to specific height standards. • Flexibility in the code is necessary to allow articulation, stepping, etc.	X	X
Option 3: Establish a Numerical Standard Unique to Hotel.		

1240		
The Planning Commission direction in light blue. City Council additional direction in underlined in dark blue. If there is an X under the CC column but no dark blue, the City Council made no modifications to the PC recommendation.	**Direction**	
	PC	**CC**
Issue 17: Floor Area Ratio (Page 34) **PC 4/30/2015; CC review on 4/30/2015 and 10/19/2015**		PENDING
A. Decks (Page 35)		
Option 1: Maintain existing standards.		
Option 2: Increase allowance beyond 150 sf.		
Option 3: Add exception for special circumstances.		
New Option: Remove decks from FAR Calculation • Acknowledged that deck regulations do not belong in the FAR standards. Decks should be included in the updated design permit thresholds and residential development standards. • Decks on the front of a home are exempt from a design permit and may be approved administratively. • Decks on the rear of a home may be approved administratively if it complies with new development standards including location/separation standards, size limitation, height (no higher than finished floor of second story) and is accessed through bedroom. • Rooftop decks and decks that do not comply with the administrative permit development standards require a design permit with Planning Commission approval. • Remove decks on restaurants and hotels from the floor area calculation. Include decks associated with bar/restaurant toward parking calc. • Clarify staircase requirement in code. • Lots less than 3000 sf: exception up to 250 sf for enclosed garage.	X	X
Issue 17: Floor Area Ratio (Continued) PC on 4/30/2015 and CC direction on 4/30/2015 and 10/19/2015		
B. Basements (Page 35)		PENDING
Option 1: Maintain existing standards.		
Option 2: Increase existing allowance beyond 250 square feet.		
Option 3: Remove basements from FAR formula. • Include area of basement in parking requirement. • Basements on slopes that are visible from exterior and not located below natural grade on all 4 sides count toward FAR . • Basements that are not visible and are located below natural grade on 4 sides should not count toward FAR.	X	X

1240		
The Planning Commission direction in light blue. City Council additional direction in underlined in dark blue. If there is an X under the CC column but no dark blue, the City Council made no modifications to the PC recommendation.	**Direction**	
	PC	**CC**
Phantom Floors, Roof Eaves, and Window Projections (Bay Windows)(Page 36) **PC on 4/30/2015 and CC direction on 4/30/2015 and 10/19/2015**		
Option 1: Maintain existing standards.		
Option 2: Remove phantom floors from the FAR calculation.		
Option 3: Remove roof eaves from the FAR calculation.		
Option 4: Remove window projects from FAR calculation.		
Option 5: Remove a combination of ~~phantom floors~~, roof eaves, and/or window projections from the FAR calculation. • Keep phantom floors in FAR calculation • Add dimensions to maximum size for Bay Windows	X	X
Issue 18: City Council Appeal of Planning Commission Decision (Page 36) **PC review on 6/22/2015**		PENDING
Option 1: Maintain existing appeal process.		
Option 2: Add "call-up" procedure with 2 Council member support requirement to hear a call-up an application. • Council member may initiate review of any decision or action of the Planning Commission by giving notice to the City Clerk within appeal period. • City Clerk places "call-up" vote on next regularly scheduled meeting. • During next regularly scheduled meeting, Council member provides reasoning for "call-up" of Planning Commission decision. 2 Council members must vote in support of hearing "call-up" • If supported by 2 members, City Clerk schedules review of Planning Commission decision.	X	Removed from Zoning Code issues.
Option 3: Add "call-up" procedure and require majority vote by City Council to call-up an application.		

ADDENDUM TO PROGRAM ENVIRONMENTAL IMPACT REPORT CITY OF CAPITOLA GENERAL PLAN UPDATE (SCH #2013072002)

For the

CITY OF CAPITOLA ZONING CODE UPDATE

INTRODUCTION

This addendum has been prepared to document compliance with the California Environmental Quality Act (CEQA) for the City of Capitola's proposed Zoning Code update. The proposed Zoning Code update would implement the City of Capitola's 2014 General Plan Update and includes both text and map amendments to reflect the goals, policies, and implementation measures in the 2014 General Plan.

This addendum provides an analysis of whether the adoption of the Zoning Code update would result in any new or more severe adverse environmental effects which were not previously analyzed in the 2014 General Plan Update Program EIR pursuant to CEQA Guidelines Sections 15162, 15164, and 15168.

PROJECT DESCRIPTION

The City of Capitola proposes a comprehensive update to its Zoning Code (Municipal Code Chapter 17) which includes both text and map amendments to reflect the goals, policies, and implementation measures in the 2014 General Plan update. The existing Zoning Code has not been comprehensively updated since 1975.

The Zoning Code update would establish new and modified land use regulations which will guide future development and design throughout the City of Capitola. The proposed Zoning Code update includes new and revised zoning districts, permitting procedures, and development standards throughout the City of Capitola. Development standards and uses in the Zoning Code update have been modified from the existing code to be consistent with current federal and state regulations, better reflect current conditions, desired development trends, and best planning practices.

The proposed Zoning Code update would also move the City's Green Building Ordinance from Municipal Code Chapter 17 (Zoning Code) to Chapter 15 (Buildings and Construction). No changes are currently proposed to the Green Building Ordinance other than moving it to another chapter of the Municipal Code.

Changes to the Zoning Code are primarily administrative in nature, including a new and more user-friendly format, improved organization and clarity, revised nomenclature and naming conventions, and previously uncodified procedural requirements. The updated Code presents information and standards in table formats and relies more heavily on graphics to illustrate the meaning and intent of various regulations.

A summary of notable changes included in the proposed Zoning Code update are outlined below:

Attachment: Addendum to EIR (1392 : Zoning Code Update)

- Improved organization and format to improve clarity and usability;
- A new user guide to help citizens access, understand, and apply the Zoning Code;
- Revised regulations to comply with federal and state law;
- Streamlined permitting process for routine permits including signs, design permits, rooftop solar systems, and tenant improvements;
- Combined the current Commercial-Residential and Neighborhood-Commercial zoning districts into a new Neighborhood Mixed-Use zoning district to be consistent with the General Plan land use designation;
- Consolidated/eliminated 6 overlay zones which were redundant with other zoning and/or CEQA regulations to simplify the zoning map;
- Updated coastal overlay chapter with significantly improved organization and clarity;
- Improved historic preservation chapter which codifies process to review and modify historic structures and provides incentives and exceptions to promote preservation;
- Simplified legal non-conforming standards which eliminates the existing 80% valuation standard and adds a new replication allowance;
- Revised parking standards for take-out restaurants in the Village to replace the current 6-seat rule with a square-footage allowance;
- Relaxed development standards for secondary dwelling units;
- Planned Developments would no longer be allowed in R-1 zones;
- Better defined community benefits to qualify for a Planned Development or General Plan allowances for increased floor area ratio;
- Simplified formula to calculate Floor Area Ratio;
- New lighting standards to prevent light trespass;
- New regulations to control unattended donation boxes;
- Improved guidance on when post-approval changes to a project trigger review by the Planning Commission;
- New standards to limit the allowable area of outdoor commercial displays;
- Incentives to encourage non-conforming multi-family uses in single-family zones to make needed property improvements. Also reduced allowable extensions from 50 to 25 years.
- New standards to allow parklets and sidewalk dining areas;
- New minor modification process to allow the Planning Commission to authorize minor deviations to certain development standards which don't meet variance findings;
- New standards to regulate the placement of outdoor decks in residential zones;
- Modified Design Review process to allow a second architect to review major projects;
- New requirements for large commercial and residential projects to provide bike and electric vehicle parking.

While some of the above-listed revisions will result in modest changes to existing development standards, none of the revisions would allow increased density, reduced lot size requirements, or substantial changes to lot coverage, floor area ratio, height, or requirements for on-site parking.

Use regulations have also been revised in the proposed code to account for modern use types not contemplated in the current code and to remove outdated and inapplicable use classifications. Like the current code, the updated code would require a discretionary use permit for use types which have the potential to adversely affect existing community character.

CEQA ADDENDUM PROCEDURES

This document has been prepared in accordance with CEQA Guidelines sections 15164 and 15168 to explain the rationale for determining that the proposed Capitola Zoning Code update would not create any new or substantially more severe significant effects on the environmental that were not analyzed in the General Plan Update EIR.

In determining whether an Addendum is the appropriate document to analyze modifications to the General Plan EIR, State CEQA Guidelines Section 15164 states:

(a) The lead agency or responsible agency shall prepare an addendum to a previously certified EIR if some changes or additions are necessary but none of the conditions described in Section 15162 calling for preparation of a subsequent EIR have occurred.

(b) An addendum to an adopted negative declaration may be prepared if only minor technical changes or additions are necessary or none of the conditions described in Section 15162 calling for the preparation of a subsequent EIR or negative declaration have occurred.

(c) An addendum need not be circulated for public review but can be included in or attached to the final EIR or adopted negative declaration.

(d) The decision-making body shall consider the addendum with the final EIR or adopted negative declaration prior to making a decision on the project.

(e) A brief explanation of the decision not to prepare a subsequent EIR pursuant to Section 15162 should be included in an addendum to an EIR, the lead agency's required findings on the project, or elsewhere in the record. The explanation must be supported by substantial evidence.

Since the General Plan EIR has been certified, the environmental impacts of subsequent activities proposed under the General Plan must be examined in light of the impact analysis in the certified EIR to determine if additional CEQA documentation must be prepared. One of the standards that applies is whether, under Public Resources Code Section 21166 and State CEQA Guidelines Sections 15162 and 15163, there are new significant effects or other grounds that require preparation of a subsequent EIR or supplemental EIR in support of further agency action on the project. Under these guidelines, a subsequent or supplemental EIR shall be prepared if any of the following criteria are met:

(a) When an EIR has been certified or negative declaration adopted for a project, no subsequent EIR shall be prepared for that project unless the lead agency determines, on the basis of substantial evidence in light of the whole record, one or more of the following:

1) Substantial changes are proposed in the project which will require major revisions of the previous EIR or negative declaration due to the involvement of new significant environmental effects or a substantial increase in the severity of previously identified significant effects;

2) Substantial changes occur with respect to the circumstances under which the project is undertaken which will require major revisions of the previous EIR or negative declaration due to the involvement of new significant environmental effects or a substantial increase in the severity of previously identified significant effects; or

3) New information of substantial importance, which was not known and count not have been known with the exercise of reasonable diligence at the time the previous EIR was certified as complete or the negative declaration was adopted, shows any of the following:

A. The project will have one or more significant effects not discussed in the previous EIR or negative declaration;

B. Significant effects previously examined will be substantially more severe than shown in the previous EIR;

C. Mitigation measures or alternatives previously found not to be feasible would in fact be feasible and would substantially reduce one or more significant effects of the project, but the project proponents decline to adopt the mitigation measure or alternative; or

D. Mitigation measures or alternatives which are considerably different from those analyzed in the previous EIR would substantially reduce one or more significant effects on the environment, but the project proponents decline to adopt the mitigation measure or alternative.

As demonstrated in the environmental analysis contained herein, none of the conditions that had been analyzed in the General Plan EIR would change with adoption of the proposed Zoning Code update. Furthermore, no new information of substantial importance meeting the criteria listed in State CEQA Guidelines Section 15162 has been identified.

PRIOR ENVIRONMENTAL DOCUMENT

The Capitola City Council adopted the General Plan Update and certified the associated EIR on June 26, 2014. The certified EIR found that adoption of the GPU would have significant, unavoidable effects to air quality, hydrology and water quality, traffic, utilities and service systems, and greenhouse gas emissions. In accordance with CEQA section 15091, the Capitola City Council adopted findings of overriding considerations to certify the EIR.

ENVIRONMENTAL REVIEW UPDATE CHECKLIST

I. AESTHETICS

Since the previous EIR was certified or previous ND was adopted, are there any changes in the project, changes in circumstances under which the project is undertaken and/or "new information of substantial importance" that cause one or more effects to aesthetic resources including: scenic vistas; scenic resources including, but not limited to, trees, rock outcroppings, or historic buildings.; existing visual character or quality of the site and its surroundings; or day or nighttime views in the area?

Response: The proposed Zoning Code update would not result in new or increased severity of significant visual and light/glare impacts beyond what was addressed in the General Plan EIR. The amendments to the Zoning Code are consistent with the development assumptions under the adopted General Plan. Housing and commercial uses would be developed in the same locations and within prescribed densities and intensities as contemplated in the General Plan EIR. All future development projects would be subject to applicable City requirements pertaining to visual resources, as well as to further CEQA analyses of project specific impacts.

II. AGRICULTURAL AND FORESTRY RESOURCES

Since the previous EIR was certified or previous ND was adopted, are there any changes in the project, changes in circumstances under which the project is undertaken and/or "new information of substantial importance" that cause one or more effects to agricultural resources including: conflict with zoning for or result in rezoning of forest land; result in the loss of forest land or conversion of forest land to non-forest use; convert Important Farmland and/or conflict with existing zoning for agricultural use or Williamson Act contract?

Response: There are no forest lands, farmlands of state or local importance, or agriculturally zoned properties in the City of Capitola. Consequently, the GP EIR concluded that there would be no significant impacts to agriculture or forestry resources. The proposed Zoning Code update would not result in any new impacts not previously considered by the GP EIR.

III. AIR QUALITY

Since the previous EIR was certified or previous ND was adopted, are there any changes in the project, changes in circumstances under which the project is undertaken and/or "new information of substantial importance" that cause one or more effects to air quality including: conflicts with or obstruction of implementation of the Regional Air Quality Strategy (RAQS) or applicable portions of the State Implementation Plan (SIP); violation of any air quality standard or substantial contribution to an existing or projected air quality violation; a cumulatively considerable net increase of any criteria pollutant for which the project region is non-attainment under an applicable federal or state ambient air quality standard; exposure of sensitive receptors to

substantial pollutant concentrations; or creation of objectionable odors affecting a substantial number of people?

Response: The General Plan EIR found that implementation of the Plan could result in significant, unavoidable impacts to air quality through an increase in mobile and stationary source emissions and cumulative contributions to regional air quality standards. The proposed Zoning Code update would not increase any residential densities or commercial intensities nor does it include new allowances which could facilitate development which could result in direct or indirect air quality impacts. Therefore, there are no project changes or any new information of substantial importance which indicate that the proposed Zoning Code update would exacerbate air quality impacts beyond the analysis and conclusions in the General Plan EIR.

IV. BIOLOGICAL RESOURCES

Since the previous EIR was certified or previous ND was adopted, are there any changes in the project, changes in circumstances under which the project is undertaken and/or "new information of substantial importance" that cause one or more effects to biological resources including: adverse effects on any sensitive natural community (including riparian habitat) or species identified as a candidate, sensitive, or special status species in a local or regional plan, policy, or regulation, or by the California Department of Fish and Game or U.S. Fish and Wildlife Service; adverse effects to federally protected wetlands as defined by Section 404 of the Clean Water Act; interference with the movement of any native resident or migratory fish or wildlife species or with wildlife corridors, or impeding the use of native wildlife nursery sites; and/or conflicts with the provisions of any adopted Habitat Conservation Plan, Natural Communities Conservation Plan, or other approved local, regional or state habitat conservation plan, policies or ordinances?

Response: The General Plan EIR found that implementation of the Plan would not result in any significant impacts to biological resources. The proposed Zoning Code update does not include any policies or actions which would involve new or altered physical changes to the environment which have the potential to adversely affect biological resources. There have been no changes in the project or is there any new information of substantial importance to indicate that the proposed Zoning Code update would result in new or more severe impacts to biological resources.

V. CULTURAL RESOURCES

Since the previous EIR was certified or previous ND was adopted, are there any changes in the project, changes in circumstances under which the project is undertaken and/or "new information of substantial importance" that cause one or more effects to cultural resources including: causing a change in the significance of a historical or archaeological resource as defined in State CEQA Guidelines Section 15064.5; destroying a unique paleontological resource or site or unique geologic feature; and/or disturbing any human remains, including those interred outside of formal cemeteries?

Response: The General Plan EIR found that implementation of the Plan could result in significant impacts to cultural resources, but that mitigation measures could be applied to reduce the impact to a less than significant level. The proposed Zoning Code update does not include any residential density or commercial intensity increases which could result in additional housing development above what was evaluated in the General Plan EIR. Therefore, there have been no changes to the project or new information of substantial importance which indicate that the proposed Zoning Code update could result in new or more severe impacts to cultural resources.

VI. GEOLOGY AND SOILS

Since the previous EIR was certified or previous ND was adopted, are there any changes in the project, changes in circumstances under which the project is undertaken and/or "new information of substantial importance" that result in one or more effects from geology and soils including: exposure of people or structures to potential substantial adverse effects, including the risk of loss, injury, or death involving rupture of a known earthquake fault, seismic-related ground failure, including liquefaction, strong seismic ground shaking, or landslides; result in substantial soil erosion or the loss of topsoil; produce unstable geological conditions that will result in adverse impacts resulting from landslides, lateral spreading, subsidence, liquefaction or collapse; being located on expansive soil creating substantial risks to life or property; and/or having soils incapable of adequately supporting the use of septic tanks or alternative wastewater disposal systems where sewers are not available for the disposal of wastewater?

Response: The General Plan EIR found that implementation of the Plan would have no potential to result in significant impacts to/from geology and soils. There have been no changes to the project or new information of substantial importance which indicate that the proposed Zoning Code update could result in new or more severe impacts to/from geology and soils.

VII. GREENHOUSE GASES

Since the previous EIR was certified or previous ND was adopted, are there any changes in the project, changes in circumstances under which the project is undertaken and/or "new information of substantial importance" that show the project may generate greenhouse gas emissions, either directly or indirectly, that may have a significant impact on the environment; or would conflict with an applicable plan, policy or regulation adopted for the purpose of reducing the emission of greenhouse gases?

Response: The General Plan EIR found that implementation of the Plan would result in significant, unavoidable impacts to greenhouse gases and climate change. The proposed Zoning Code update includes the same residential densities and commercial intensities as what was evaluated by the General Plan EIR, therefore, there have not been any changes to

the project or new information of substantial importance which indicate that the proposed Zoning Code update could result in new or more severe impacts to greenhouse gas emissions.

VIII. HAZARDS AND HAZARDOUS MATERIALS

Since the previous EIR was certified or previous ND was adopted, are there any changes in the project, changes in circumstances under which the project is undertaken and/or "new information of substantial importance" that result in one or more effects from hazards and hazardous materials including: creation of a significant hazard to the public or the environment through the routine transport, storage, use, or disposal of hazardous materials or wastes; creation of a significant hazard to the public or the environment through reasonably foreseeable upset and accident conditions involving the release of hazardous materials into the environment; production of hazardous emissions or handling hazardous or acutely hazardous materials, substances, or waste within one-quarter mile of an existing or proposed school; location on a site which is included on a list of hazardous materials sites compiled pursuant to Government Code Section 65962.5 creating a hazard to the public or the environment; location within an airport land use plan or, where such a plan has not been adopted, within two miles of a public airport or public use airport; within the vicinity of a private airstrip resulting in a safety hazard for people residing or working in the project area; impair implementation of or physically interfere with an adopted emergency response plan or emergency evacuation plan; and/or exposure of people or structures to a significant risk of loss, injury or death involving wildland fires, including where wildlands are adjacent to urbanized areas or where residences are intermixed with wildlands?

Response: The General Plan EIR found that implementation of the Plan would not result in any significant impacts to/from hazards and hazardous materials. There have been no changes to the project, or new information of substantial importance which indicate that the proposed Zoning Code update would result in a new or more severe impact to hazards and hazardous materials.

X. HYDROLOGY AND WATER QUALITY

Since the previous EIR was certified or previous ND was adopted, are there any changes in the project, changes in circumstances under which the project is undertaken and/or "new information of substantial importance" that cause one or more effects to hydrology and water quality including: violation of any waste discharge requirements; an increase in any listed pollutant to an impaired water body listed under section 303(d) of the Clean Water Act ; cause or contribute to an exceedance of applicable surface or groundwater receiving water quality objectives or degradation of beneficial uses; substantially deplete groundwater supplies or interfere substantially with groundwater recharge such that there would be a net deficit in aquifer volume or a lowering of the local groundwater table level; substantially alter the existing drainage pattern of the site or area in a manner which would result in substantial erosion, siltation or flooding on- or off-site; create or contribute runoff water which would exceed the capacity of existing or planned storm water drainage systems; provide substantial additional sources of polluted runoff;

place housing or other structures which would impede or redirect flood flows within a 100-year flood hazard area as mapped on a federal Flood Hazard Boundary or Flood Insurance Rate Map or other flood hazard delineation map, including City Floodplain Maps; expose people or structures to a significant risk of loss, injury or death involving flooding, including flooding as a result of the failure of a levee or dam; and/or inundation by seiche, tsunami, or mudflow?

Response: The General Plan EIR found that the implementation of the Plan could result in significant unavoidable impacts to groundwater supply, but found no significant impacts to water quality, drainage, erosion, or flooding. The proposed Zoning code update would not increase residential densities or commercial intensities which would facilitate new water-dependent development. Therefore, there have been no changes to the project or any new information of substantial importance which indicate that the proposed Zoning code update would result in new or more severe impacts to hydrology or water quality.

XI. LAND USE AND PLANNING

Since the previous EIR was certified or previous ND was adopted, are there any changes in the project, changes in circumstances under which the project is undertaken and/or "new information of substantial importance" that cause one or more effects to land use and planning including: physically dividing an established community; and/or conflicts with any applicable land use plan, policy, or regulation of an agency with jurisdiction over the project adopted for the purpose of avoiding or mitigating an environmental effect?

Response: The General Plan EIR found that implementation of the Plan would not result in any significant impacts to land use and planning. There have been no changes in the project or information of substantial importance which indicate that the proposed Zoning code update would result in any new or more severe impacts to land use and planning.

XII. MINERAL RESOURCES

Since the previous EIR was certified or previous ND was adopted, are there any changes in the project, changes in circumstances under which the project is undertaken and/or "new information of substantial importance" that cause one or more effects to mineral resources including: the loss of availability of a known mineral resource that would be of value to the region and the residents of the state; and/or loss of locally-important mineral resource recovery site delineated on a local general plan, specific plan or other land use plan?

Response: There are no mineral resource deposits in the City of Capitola which could be reasonably extracted given existing non-compatible land uses. Accordingly, the General Plan EIR found that implementation of the Plan would not result in any impacts to mineral resources. There have been no changes to the project or new information of substantial

importance which indicate that the proposed Zoning code update would result in new or more severe impacts to mineral resources.

XIII. NOISE

Since the previous EIR was certified or previous ND was adopted, are there any changes in the project, changes in circumstances under which the project is undertaken and/or "new information of substantial importance" that result in one or more effects from noise including: exposure of persons to or generation of noise levels in excess of standards established in the local general plan or noise ordinance, or applicable standards of other agencies; exposure of persons to or generation of excessive groundborne vibration or groundborne noise levels; a substantial permanent increase in ambient noise levels in the project vicinity above levels existing without the project; a substantial temporary or periodic increase in ambient noise levels in the project vicinity above levels existing without the project; for projects located within an airport land use plan or, where such a plan has not been adopted, within two miles of a public airport or public use airport, or for projects within the vicinity of a private airstrip, would the project expose people residing or working in the project area to excessive noise levels?

Response: The General Plan EIR found that implementation of the Plan could result in significant impacts from noise resulting from construction of future projects authorized by the Plan. Consequently, the General Plan EIR included mitigation measures to reduce impacts from noise to a less than significant level. However, there have been no changes in the project or new information of substantial importance which indicate that the proposed Zoning code update would result in new or more severe impacts to/from noise.

XIV. POPULATION AND HOUSING

Since the previous EIR was certified or previous ND was adopted, are there any changes in the project, changes in circumstances under which the project is undertaken and/or "new information of substantial importance" that result in one or more effects to population and housing including displacing substantial numbers of existing housing or people, necessitating the construction of replacement housing elsewhere?

Response: The General Plan EIR found that implementation of the Plan would not result in any significant impacts to population and housing. There have been no changes to the project or information of substantial importance which indicate that the proposed Zoning code update would result in any new or more severe impacts to population and housing.

XV. PUBLIC SERVICES

Since the previous EIR was certified or previous ND was adopted, are there any changes in the project, changes in circumstances under which the project is undertaken and/or "new information of substantial importance" that result in one or more substantial adverse physical impacts associated with the provision of new or physically altered governmental facilities or the need for new or physically altered governmental facilities, the construction of which could cause significant environmental impacts, in order to maintain acceptable service ratios, response times or other performance objectives for any of the following public services: fire protection, police protection, schools, parks, or other public facilities?

Response: The General Plan EIR found that implementation of the Plan would not result in any significant impacts to public services. There have been no changes to the project or information of substantial importance which indicate that the proposed Zoning code update would result in any new or more severe impacts to public services.

XVI. RECREATION

Since the previous EIR was certified or previous ND was adopted, are there any changes in the project, changes in circumstances under which the project is undertaken and/or "new information of substantial importance" that result in an increase in the use of existing neighborhood and regional parks or other recreational facilities such that substantial physical deterioration of the facility would occur or be accelerated; or that include recreational facilities or require the construction or expansion of recreational facilities which might have an adverse physical effect on the environment?

Response: The General Plan EIR found that implementation of the Plan would not result in any significant impacts to recreation. There have been no changes to the project or information of substantial importance which indicate that the proposed Zoning code update would result in any new or more severe impacts to recreation.

XVII. TRANSPORTATION/TRAFFIC

Since the previous EIR was certified or previous ND was adopted, are there any changes in the project, changes in circumstances under which the project is undertaken and/or "new information of substantial importance" that cause effects to transportation/traffic including: conflict with an applicable plan, ordinance or policy establishing measures of effectiveness for the performance of the circulation system, taking into account all modes of transportation including mass transit and non-motorized travel and relevant components of the circulation system, including but not limited to intersections, streets, highways and freeways, pedestrian and bicycle paths, and mass transit; conflict with an applicable congestion management program, including, but not limited to, level of service standards and travel demand measures, or other standards established by the county congestion management agency for designated roads or highways; cause a change in air traffic patterns, including either an increase in traffic levels or a change in location that results in

substantial safety risks; substantial increase in hazards due to a design feature (e.g., sharp curves or dangerous intersections) or incompatible uses (e.g., farm equipment); inadequate emergency access; and/or a conflict with adopted policies, plans, or programs supporting alternative transportation (e.g., bus turnouts, bicycle racks)?

Response: The General Plan EIR found that implementation of the Plan could result in significant, unavoidable impacts to transportation. The proposed Zoning code update does not include any increased residential densities or commercial intensities which would facilitate new development, which could result in additional traffic. Therefore, there have been no changes to the project or information of substantial importance which indicate that the proposed Zoning code update would result in any new or more severe impacts to transportation.

XVIII. UTILITIES AND SERVICE SYSTEMS

Since the previous EIR was certified or previous ND was adopted, are there any changes in the project, changes in circumstances under which the project is undertaken and/or "new information of substantial importance" that cause effects to utilities and service systems including: exceedance of wastewater treatment requirements of the applicable Regional Water Quality Control Board; require or result in the construction of new water or wastewater treatment facilities, new storm water drainage facilities or expansion of existing facilities, the construction of which could cause significant environmental effects; require new or expanded entitlements to water supplies or new water resources to serve the project; result in a determination by the wastewater treatment provider, which serves or may serve the project that it has adequate capacity to serve the project's projected demand in addition to the provider's existing commitments; be served by a landfill with sufficient permitted capacity to accommodate the project's solid waste disposal needs; and/or noncompliance with federal, state, and local statutes and regulations related to solid waste?

Response: The General Plan EIR found that implementation of the Plan could result in significant unavoidable impacts to utilities and service systems due to the potential for groundwater overdraft. The proposed Zoning code update would not increase residential densities or commercial intensities which would facilitate new water-dependent development or the need for new or expanded wastewater treatment facilities or landfills. There have been no changes to the project or information of substantial importance which indicate that the proposed Zoning code update would result in any new or more severe impacts to utilities and service systems.

XIX. MANDATORY FINDINGS OF SIGNIFICANCE:

Since the previous EIR was certified or previous ND was adopted, are there any changes in the project, changes in circumstances under which the project is undertaken and/or "new

information of substantial importance" that result in any mandatory finding of significance listed below?

Does the project degrade the quality of the environment, substantially reduce the habitat of a fish or wildlife species, cause a fish or wildlife population to drop below self- sustaining levels, threaten to eliminate a plant or animal community, reduce the number or restrict the range of a rare or endangered plant or animal or eliminate important examples of the major periods of California history or prehistory?

Does the project have impacts that are individually limited, but cumulatively considerable? ("Cumulatively considerable" means that the incremental effects of a project are considerable when viewed in connection with the effects of past projects, the effects of other current projects, and the effects of probable future projects)?

Does the project have environmental effects, which will cause substantial adverse effects on human beings, either directly or indirectly?

Response: There have been no changes to the project or any new information of substantial importance which indicate that the proposed Zoning code update would result in any new or more severe impacts to the quality of the environment, including adverse impacts to habitat for sensitive species, cumulative environmental impacts, or adverse direct or cumulative effects on human beings.

City of Capitola Zoning Code

Public Review Draft
February 4, 2016

Attachment: Draft Zoning Code Public Review 02.04.2016 (1392 : Zoning Code Update)

City of Capitola Zoning Code

Public Review Draft
February 4, 2016

Prepared by:

Ben Noble, Urban and Regional Planning
PlaceWorks

ZONING CODE USER'S GUIDE

General Plan and Zoning Code Overview

On June 26, 2014 the City of Capitola adopted an updated General Plan - the City's primary policy document governing local land use and development. The General Plan contains a Land Use Map identifying permitted land uses and development intensities, and establishes basic policies to guide development and conservation decisions in Capitola over the next ten to twenty years.

Capitola's Zoning Code, codified as Title 17 in the Capitola Municipal Code, implements the General Plan with detailed land use and development regulations. The Zoning Code establishes a Zoning Map with zoning districts that apply to all property in Capitola. The Zoning Code identifies exactly which land uses are allowed in each zoning district and establishes the permitted building heights, minimum setbacks from property lines, and other development standards in each zoning district.

In addition to development standards, the Zoning Code also establishes standards for signs, parking, landscaping, wireless communications, historic resources, and many other topics. Finally, the Zoning Code identifies permits required for different land uses and types of development, and the process by which the City reviews permit applications and administers the requirements of the Zoning Code.

Preparation of the Zoning Code

Shortly after the adoption of the new General Plan, the City began the process to update the Zoning Code. In August 2014, the City began public outreach for the Zoning Code Update with stakeholder meetings and a public survey. Following this initial outreach City staff prepared a master list of issues to address in the updated Zoning Code and an Issues and Options report that presents options for how to address a number of key policy issues. In 2015, the Planning Commission and City Council held over ten meetings to discuss the report and provide direction to City staff on preferred options to address the key issues. City staff also hosted a community meeting in June 2015 to receive public input on several key issues.

Following public input and direction from the City Council and Planning Commission, City staff and consultants drafted the updated Zoning Code and prepared an updated Zoning Map. The Public Review Draft Zoning Code and Zoning Map was published on February 4, 2016. In early 2016 the Planning Commission and City Council will meet to review the Public Review Draft Zoning Code and receive public comments on the draft document. Following these meetings City staff will prepare a revised updated Zoning Code and conduct environmental review as required by the California Environmental Quality Act (CEQA). The City aims to adopt the updated Zoning Code and Zoning Map by June 2016.

Attachment: Draft Zoning Code Public Review 02.04.2016 (1392 : Zoning Code Update)

Organization of the Zoning Code

The updated Zoning Code is organized into five parts, as follows:

- **Part 1 – Enactment and Applicability.** Part 1 legally establishes the Zoning Code, identifies rules for interpreting the Zoning Code, and identifies the Zoning districts and overlay zones established in the Zoning Map.
- **Part 2 – Zoning Districts and Overlay Zones.** Part 2 contains the land use regulations and development standards that are unique to each zoning district and overlay zone.
- **Part 3 – Citywide Standards.** Part 3 contains standards that apply to all property in Capitola, addressing issues such as parking, signs, landscaping, and accessory structures.
- **Part 4 – Permits and Administration.** Part 4 identifies procedures and requirements for permits and other approvals required by the zoning codes, and procedures for the administration of the zoning code.
- **Part 5 – Glossary.** Part 5 defines all specialized terms used in the Zoning Code.

Numbering and Referencing

The numbering system used in the updated Zoning Code continues the system in the existing Zoning Code and is consistent with other titles in the municipal code. The updated Zoning Code is organized as follows:

Title 17 – Zoning Code

Chapter 17.04 – Chapter Name

17.04.010 – Title of First Section

A. Subsection

1. Paragraph

a. Subparagraph

i. Sub-subparagraph

Changes to the Existing Zoning Code

The Zoning Code Update has resulted in a number of significant changes to Capitola's existing Zoning Code. Some of these changes are organizational and stylistic, others are substantive.

Overall, the Zoning Code has been reorganized so that readers can more easily find content and be aware of applicable requirements. Standards are presented in tables and graphics are used to illustrate important concepts and requirements. The Zoning Code has been written in Plain English with short and simple sentences and use of everyday words where possible.

Attachment: Draft Zoning Code Public Review 02.04.2016 (1392 : Zoning Code Update)

Substantive changes to the Zoning Code implement policies in the General Plan, input from the Planning Commission and City Council during the Issues and Options review, and input from residents, recent applicants, and City staff. Some substantive changes also address recent changes to State and federal law and to improve the legal defensibility of the City's development regulations.

In the updated Zoning Code important substantive changes to the existing Zoning Code are identified with a note that looks like this:

> **Note:** Important new content in the Zoning Code and major changes to the existing Zoning Code are highlighted using text boxes such as this.

These notes highlight key changes to aid the City Council, Planning Commission, and public in the review of the updated Zoning Code. Some of these changes noted in the updated Zoning Code include the following:

Zoning Districts and Zoning Map (Part 1)

- **Zoning Districts.** The new Neighborhood Mixed Use (MU-N) zoning district replaces the existing the CR and CN zoning districts. The Professional Office (PO) zoning district is eliminated.
- **Overlay Zones.** The Geological Hazards and Archaeological/Paleontological Hazards overlays translated into city-wide standards. The Automatic Review overlay zone eliminated. The Floodplain overlay zone moved out of the Zoning Code.
- **Zoning Map.** Zoning district boundaries changed to be consistent with the General Plan Land Use Map and errors with the existing Zoning Map corrected.

Zoning District Standards (Part 2)

- **Residential Zoning Districts.** New height and setback standards tailored to different neighborhood conditions.
- **Mixed Use Zoning Districts.** New building form, placement, and character design standards and new standards for a Village hotel.
- **Commercial Zoning Districts.** New limitations on office uses and residential transition standards.
- **Planned Developments.** PD zoning prohibited in single-family neighborhoods, minimum parcel size requirements eliminated, and new findings requiring substantial public benefits.

Citywide Standards (Part 3)

- **Parking**. New carport limitations and design standards, electric vehicle charging requirements, on-site parking alternatives, and bicycle parking requirements.
- **Signs**. Updated standards tailored to different areas in city, ability to approve signs administratively that comply with standards.

Attachment: Draft Zoning Code Public Review 02.04.2016 (1392 : Zoning Code Update)

- **Historic Preservation**. New chapter with process and criteria to approve modifications to historic resources
- **Incentives**. New chapter to implement General Plan policies to allow increased height and intensity in commercial zoning districts for projects that provide substantial community benefits.
- **Nonconforming Uses and Structures**. New provisions to allow replication of nonconforming single-family homes and new incentives to improve nonconforming multi-family priorities in single-family neighborhoods.
- **Supplemental Standards**. New standards for outdoor lighting, donation boxes, outdoor dining, outdoor displays of merchandise, and mixed-use development in commercial zoning districts.

Permits and Administration (Part 4)

- **Design Permits.** Revised thresholds for Design Permits, Design Permit review authority, and design review criteria.
- **Design Review Committee.** A new Design Review Committee replaces the existing Architecture and Site Review Committee. The role and membership of the Design Review Committee is similar but not identical to the Architecture and Site Review Committee.
- **Minor Use Permit.** New Minor Use Permit allows the Community Development Director to approve certain land uses.
- **Minor Modifications.** New Minor Modification approval allows the Planning Commission to approve minor deviations from development standards without a Variance.

Using the Zoning Code

Below is a general summary of how to use the updated Zoning Code. This summary is intended to help property owners and other applicants understand how the Zoning Code works and the process to determine whether a proposed project complies with applicable regulations.

All project applicants are encouraged to contact the Community Development Department to verify the standards and requirements that apply to a proposed project before preparing and submitting a project application.

Step 1: Identify your Zoning District and Any Overlay Zones

Identify the zoning district and any overlay zones that apply to your property. You can find your property on the Zoning Map, which shows the zoning districts and overlay zones that apply to it. Table 17.12-1 (Base Zoning Districts) in Chapter 17.12 lists all zoning districts in Capitola, and Table 17.12-2 (Overlay Zones) lists all of the overlay zones. Each property in Capitola is assigned one base zoning district. Some properties are subject to one or more overlay zones, but not all.

Attachment: Draft Zoning Code Public Review 02.04.2016 (1392 : Zoning Code Update)

Step 2: Determine if your Land Use is Permitted

After you have identified the zoning district and any overlay zones that apply to your property, determine if your existing or proposed land uses are permitted. Each chapter within Part 2 of the Zoning Code contains a table that list permitted land uses in the zoning district. For example, Table 17.16-1 lists permitted land uses in the residential zoning districts. If your property is in a residential zoning district, look in this table to determine if your land use is permitted. Using the key provided at the top of the table, determine if you land use is permitted by right or permitted with an Administrative Permit, Minor Use Permit, or Conditional Use Permit.

All land uses listed in the land use regulation table are defined in the Glossary (Chapter 17.160). If your land use does not clearly fall within a land use defined in the Zoning Code, the Community Development Department will determine if the land use should be treated the same as an equivalent listed land use following the procedures in Section 17.08.03.D (Unlisted Land Uses).

If your property is subject to one or more overlay zones, you also need to determine if your land use is permitted within the overlay zones. Land use regulations for overlay zones are found in Chapter 17.40 (Residential Overlay Zones) and Chapter 17.44 (Coastal Overlay Zones).

Step 3: Identify Development Standards in your Zoning District

Next, identify the development standards in your zoning districts and overlay zones if applicable. For each zoning district the Zoning Code establishes standards including minimum setbacks from property lines, maximum building height, and other limitations on the size, placement, and design of development.

Development standards for each zoning district are provided in Part 2 of the Zoning Code. For residential zoning districts, development standards can be found in Section 17.16.030 (Development Standards) of Chapter 17.16 (Residential Zoning Districts). Basic site and structure requirements are typically presented in a table followed by text with additional requirements or exceptions. Development standard tables may reference other sections of the Zoning Code that are relevant to your project.

Like with land use regulations, if you property is subject to one or more overlay zones, you also need to determine that your project complies with any additional development standards for the overlay zones.

Step 4: Identify Other Applicable Development Standards and Land Use Regulations

After you've determined that your project complies with land use regulations and development standards that are unique to your zoning district and overlay zone, determine that your project complies with citywide standards. These citywide standards are in Part 3 of the Zoning Code and include parking (Chapter 17.76), landscaping (Chapter 17.72), and signs (Chapter 17.80) for commercial projects. The Community Development Department will help you to identify which standards apply to your project and whether your project complies with these standards.

Attachment: Draft Zoning Code Public Review 02.04.2016 (1392 : Zoning Code Update)

Certain land uses also are subject to special standards located in Chapter 17.96 (Supplemental Standards) of the Zoning Code. Land Use regulation tables for zoning districts in Part 2 include references to any supplemental standards. If your land use is subject to supplemental standards, review the applicable standards in Chapter 17.96 to verify compliance. The Community Development Department will help to identify any applicable standards and your compliance.

Step 5: Identify Required Permits and Approvals

After you've determined that your project complies with all applicable standards and regulations, you need to determine which permits and approvals are required. The land use regulation tables in Part 2 identifies which permits are required for the land use (Administrative Permit, Minor Use Permit, Conditional Use Permit) or no permit (permitted by right).

If you propose a physical change to a structure or site, your project may require a Design Permit. Projects that require a Design Permit are listed in Table 17.120-1 in Chapter 17.120 (Design Permits). Some Design Permits are approved by the Planning Commission, others by the Community Development Director.

Your project may require other types of permits, such as a sign permit for signs, a Coastal Permit for development within the Coastal Zone, or a Certificate of Appropriateness for modifications to a historic property. All permits required by the Zoning Code all listed in Table 17.108-1 in Chapter 17.108 (Administrative Responsibility) and chapters for each permit are in Part 4 of the Zoning Code. Be sure to review with a City Planner all required permits for your project.

Once you have identified which permits are required for your project, you need to identify the procedures and requirements to obtain approval. Find the chapter for each required permit in Part 4, and review the requirements. The permit chapter will tell you whether the Planning Commission or the Community Development Director approves the permit, whether a public hearing is required, and the criteria that the City will use to approve your project. Permit chapters also refer to procedures that apply to all types of permits, such as application submittal and review (Chapter 17.112), public notice and hearing (Chapter 17.148), and post-decision procedures (Chapter 17.156).

Attachment: Draft Zoning Code Public Review 02.04.2016 (1392 : Zoning Code Update)

CITY OF CAPITOLA ZONING CODE CONTENTS

Part 1 – Enactment and Applicability

Chapter 17.04 - Purpose and Effect of Zoning Code……..04-1

17.04.010 Title and Authority
17.04.020 Purpose of the Zoning Code
17.04.030 Relationship to the General Plan
17.04.040 Applicability of the Zoning Code

Chapter 17.08 - Interpretation…….. 08-1

17.08.010 Purpose
17.08.020 Authority
17.08.030 Rules of Interpretation
17.08.040 Procedures for Interpretation/Determinations
17.08.050 Zoning Code Enforcement

Chapter 17.12 - Zoning Districts and Map……. 12-1

17.12.010 Purpose
17.12.020 Zoning Districts
17.12.030 Zoning Map

Part 2 – Zoning Districts and Overlay Zones

Chapter 17.16 - Residential Zoning Districts…….. 16-1

17.16.010 Purpose of the Residential Zoning Districts
17.16.020 Land Use Regulations
17.16.030 Development Standards

Chapter 17.20 - Mixed Use Zoning Districts…….. 20-1

17.20.010 Purpose of the Mixed Use Zoning Districts
17.20.020 Land Use Regulations
17.20.030 Development Standards

Chapter 17.24 - Commercial and Industrial Zoning Districts……... 24-1

17.24.010 Purpose of the Commercial and Industrial Zoning Districts
17.24.020 Land Use Regulations
17.24.030 Development Standards

Attachment: Draft Zoning Code Public Review 02.04.2016 (1392 : Zoning Code Update)

Chapter 17.28 - Visitor Serving Zoning Districts……28-1

17.28.010 Purpose of the Visitor Serving Zoning Districts
17.28.020 Dual Zoning
17.28.030 Land Use Regulations
17.28.040 Development Standards

Chapter 17.32 - Special Purpose Zoning Districts……..32-1

17.32.010 Purpose of the Special Purpose Zoning Districts
17.32.020 Land Use Regulations
17.32.030 Development Standards

Chapter 17.36 - Planned Development Zoning District……36-1

17.36.010 Purpose of the Planned Development Zoning District
17.36.020 Where Allowed
17.36.030 Permitted Land Uses
17.36.040 Development Standards
17.36.050 Required Approvals
17.36.060 Preliminary Development Plans
17.36.070 Planned Development Rezoning
17.36.080 Final Development Plans

Chapter 17.40 - Residential Overlay Zones…… 40-1

17.40.010 Purpose
17.40.020 Affordable Housing (-AH) Overlay Zone
17.40.030 Vacation Rental Use (-VRU) Overlay Zone
17.40.040 Village Residential (-VR) Overlay Zone

Chapter 17.44 - Coastal Overlay Zone…… 44-1

17.44.010 Purpose
17.44.020 Definitions
17.44.030 Relationship to Base Zoning Districts
17.44.040 Allowed Land Uses
17.44.050 Development Standards
17.44.060 Coastal Permit Requirements
17.44.070 Coastal Permit Exemptions
17.44.080 Categorical Exclusions
17.44.090 Challenges to City Determinations
17.44.100 Application Submittal
17.44.110 Public Notice and Hearing
17.44.120 Findings for Approval
17.44.130 Notice of Final Action

Attachment: Draft Zoning Code Public Review 02.04.2016 (1392 : Zoning Code Update)

17.44.140 Appeals
17.44.150 Permit Issuance
17.44.160 Emergency Permits
17.44.170 Coastal Permit Amendments

Part 3 – Citywide Standards

Chapter 17.48 - Height, Setbacks, and Floor Area…… 48-1

17.48.010 Purpose
17.48.020 Height Measurement and Exceptions
17.48.030 Setback Measurement and Exceptions
17.48.040 Floor Area and Floor Area Ratio

Chapter 17.52 - Accessory Structures and Uses……...52-1

17.52.010 Purpose and Applicability
17.52.020 Accessory Structures
17.52.030 Accessory Uses

Chapter 17.56 - Archaeological and Paleological Resources…… 56-1

17.56.010 Purpose and Intent
17.56.020 Coastal Permit
17.56.030 Archaeological Survey Report
17.56.040 Environmental Assessment Requirement
17.56.050 Development Standards

Chapter 17.60 - Fences and Walls…… 60-1

17.60.010 Permit Requirements
17.60.020 Measurement of Fence and Wall Height
17.60.030 Height Limits
17.60.040 Fences Adjacent to Soquel Creek Pathway and Grand Avenue Walkway
17.60.050 Materials
17.60.060 Parking Lot Screening
17.60.070 Nonconforming Fences and Walls

Chapter 17.64 - Environmentally Sensitive Habitat Areas…… 64-1

17.64.010 Purpose
17.64.020 Applicability
17.64.030 General Standards
17.64.040 Soquel Creek and Lagoon
17.64.050 Soquel Creek and Escalona Gulch Monarch Butterfly Habitat Areas
17.64.060 Escalona Gulch Monarch Butterfly Habitat Areas

Attachment: Draft Zoning Code Public Review 02.04.2016 (1392 : Zoning Code Update)

Chapter 17.68 - Geological Hazards…… 68-1

17.68.010 Purpose and Applicability
17.68.020 Geologic/Engineering Report
17.68.030 Shoreline Protection Measures
17.68.040 Development in Bluff and Cliff Areas

Chapter 17.72 - Landscaping…….. 72-1

17.72.010 Purpose
17.72.020 Applicability
17.72.030 Water Efficient Landscape Design and Installation Ordinance
17.72.040 Landscape Plans
17.72.050 Required Landscape Areas
17.72.060 Landscape Standards

Chapter 17.74 - Secondary Dwelling Units…… 74-1

17.60.010 Purpose
17.60.020 Permitted Location
17.60.030 Required Permits
17.60.040 Design and Development Standards
17.60.050 Findings
17.60.060 Deed Restrictions
17.60.070 Incentives

Chapter 17.76 - Parking and Loading…… 76-1

17.76.010 Purpose
17.76.020 Applicability
17.76.030 Required Parking Spaces
17.76.040 General Requirements
17.76.050 On-site Parking Alternatives
17.76.060 Parking Design and Development Standards
17.76.070 Parking Lot Landscaping
17.76.080 Bicycle Parking
17.76.090 On-site Loading
17.76.100 Shuttle Program Parking

Chapter 17.80 -Signs……..... 80-1

17.80.010 Purpose
17.80.020 Definitions
17.80.030 Permit Requirements
17.80.040 Rules of Measurement
17.80.050 Signs Allowed Without Permits
17.80.060 Prohibited Signs
17.80.070 General Sign Standards

Attachment: Draft Zoning Code Public Review 02.04.2016 (1392 : Zoning Code Update)

17.80.080 Standards for Specific Types of Signs
17.80.090 Sign Standards for Zoning Districts
17.80.100 Residential Signs
17.80.110 Temporary Signs
17.80.120 Adjustment to Sign Standards
17.80.130 Master Sign Program
17.80.140 Nonconforming Signs
17.80.150 Violations and Enforcement

Chapter 17.84 - Historic Preservation……..84-1

17.84.010 Purpose
17.84.020 Types of Historic Resources
17.84.030 Adding or Removing Historic Landmark Designation
17.84.040 Maintenance of Historic Structures List
17.84.050 Criteria for Designating Historic Resources
17.84.060 Certificate of Appropriateness
17.84.070 Historic Preservation Incentives
17.84.080 Demolition of Historic Resources

Chapter 17.88 - Incentives for Community Benefits…… 88-1

17.88.010 Purpose
17.88.020 Incentives Restricted to Added Benefits
17.88.030 Allowable Benefits
17.88.040 Available Incentives
17.88.050 Relationship to State Density Bonus Law
17.88.060 Application Submittal and Review
17.88.070 Public Notice and Hearing
17.88.080 Findings
17.88.090 Post-Decision Procedures

Chapter 17.92 - Nonconforming Parcels, Uses, and Structures…… 92-1

17.92.010 Purpose
17.92.020 Applicability
17.92.030 General
17.92.040 Nonconforming Parcels
17.92.050 Nonconforming Use of Land
17.92.060 Nonconforming Use of Structures
17.92.070 Nonconforming Multi-Family Uses in the R-1 Zoning District
17.92.080 Nonconforming Structures
17.92.090 Findings

Attachment: Draft Zoning Code Public Review 02.04.2016 (1392 : Zoning Code Update)

Chapter 17.96 - Supplemental Standards…… 96-1

17.96.010 Purpose
17.96.020 Animal Keeping
17.96.030 Emergency Shelters
17.96.040 Home Occupations
17.96.050 Intersection Sight Distance
17.96.060 Large Commercial Land Uses
17.96.070 Large Home Day Care
17.96.080 Large Residential Care Facilities
17.96.090 Offshore Oil Development Support Facilities
17.96.100 Permanent Outdoor Displays
17.96.110 Outdoor Lighting
17.96.120 Placement of Underground Utilities
17.96.130 Recycling Collection Facilities
17.96.140 Residential Mixed Use Development in Commercial Zoning Districts
17.96.150 Self-Storage Facilities
17.96.160 Solar Energy Systems
17.96.170 Soquel Creek Pathway, Bulkheads, and Decks
17.96.180 Temporary Sidewalk Dining
17.96.190 Temporary Uses and Structures
17.96.200 Unattended Donation Boxes

Chapter 17.100 - Mobile Home Park Conversions……100-1

17.100.010 Purpose and Intent
17.100.020 Applicability
17.100.030 Definitions
17.100.040 Relocation Impact Report
17.100.050 Notice to Prospective Occupants of Pending Change in Park Status
17.100.060 Exemptions from Relocation Assistance Obligations
17.100.070 Application for Change of Use – Public Hearing – Findings
17.100.080 Measures to Prevent Avoidance of Relocation Assistance Obligations
17.100.090 Compliance with Relocation Assistance
17.100.100 Modification and Revocation of Approved Closure or Conversion
17.100.110 Expiration and Extension of Approval
17.100.120 Preemption
17.100.130 Severability

Chapter 17.104 - Wireless Communication Facilities……104-1

17.104.010 Purpose
17.104.020 Definitions

Attachment: Draft Zoning Code Public Review 02.04.2016 (1392 : Zoning Code Update)

17.104.030 Applicability
17.104.040 Permits and Approvals
17.104.050 Location Standards
17.104.060 Development Standards
17.104.070 Small Cells and Distributed Antenna Systems
17.104.080 Antenna Siting and Mounting Techniques
17.104.090 Modifications to Existing Facilities
17.104.100 Operational Standards
17.104.110 Miscellaneous Requirements
17.104.120 Severability

Part 4 – Permits and Administration

Chapter 17.108 - Administrative Responsibility……108-1

17.108.010 Purpose
17.108.020 Planning Agency
17.108.030 Review and Decision-Making Authority
17.108.040 Design Review Committee

Chapter 17.112 - Permit Application and Review……..112-1

17.112.010 Purpose
17.112.020 Application Preparation and Filing
17.112.030 Application Fees
17.112.040 Application Review
17.112.050 Multiple Permit Applications
17.112.060 Project Evaluation and Staff Reports
17.112.070 Environmental Review
17.112.080 Applications Deemed Withdrawn

Chapter 17.116 - Administrative Permits……116-1

17.116.010 Purpose
17.116.020 When Required
17.116.030 Review Authority
17.116.040 Application Submittal, Review, and Action
17.116.050 Public Notice and Hearing
17.116.060 Conditions of Approval
17.116.070 Appeals and Post-Decision Procedures

Chapter 17.120 - Design Permits…… 120-1

17.120.010 Purpose

Attachment: Draft Zoning Code Public Review 02.04.2016 (1392 : Zoning Code Update)

17.120.020 Types of Design Permits
17.120.030 When Required
17.120.040 Application Submittal and Review
17.120.050 Design Review Committee
17.120.060 Public Notice and Hearing
17.120.070 Design Review Criteria
17.120.080 Findings for Approval
17.120.090 Conditions of Approval
17.120.100 Appeals and Post-Decision Procedures

Chapter 17.124 - Use Permits……..124-1

17.124.010 Purpose
17.124.020 When Required
17.124.030 Review Authority
17.124.040 Application Submittal and Review
17.124.050 Public Notice and Hearing
17.124.060 Considerations
17.124.070 Findings for Approval
17.124.080 Conditions of Approval
17.124.090 Appeals and Post-Decision Procedures
17.124.100 Master Use and Tenant Use Permits

Chapter 17.128 - Variances……. 128-1

17.128.010 Purpose
17.128.020 When Allowed
17.128.030 Review Authority
17.128.040 Application Submittal and Review
17.128.050 Public Notice and Hearing
17.128.060 Findings for Approval
17.128.070 Conditions of Approval
17.128.080 Precedent
17.128.090 Appeals and Post-Decision Procedures

Chapter 17.132 - Sign Permits……132-1

17.132.010 Purpose
17.132.010 Types of Sign Permits
17.132.030 When Required
17.132.040 Review Authority
17.132.050 Application Submittal and Review
17.132.060 Public Notice and Hearing
17.132.070 Findings for Approval
17.132.080 Conditions of Approval
17.132.090 Post-Decision Procedures

Attachment: Draft Zoning Code Public Review 02.04.2016 (1392 : Zoning Code Update)

Chapter 17.136 - Minor Modifications……136-1

17.136.010 Purpose
17.136.020 When Allowed
17.136.030 Review Authority
17.136.040 Application Submittal and Review
17.136.050 Public Notice and Hearing
17.136.060 Findings for Approval
17.136.070 Conditions of Approval
17.136.080 Appeals and Post-Decision Procedures

Chapter 17.140 - Reasonable Accommodations……140-1

17.140.010 Purpose
17.140.020 When Allowed
17.140.030 Review Authority
17.140.040 Public Notice of Process Availability
17.140.050 Application Requirements
17.140.060 Review Procedure
17.140.070 Criteria for Decision
17.140.080 Conditions of Approval
17.140.090 Appeals and Post-Decision Procedures

Chapter 17.144 - Zoning Code Amendments……144-1

17.144.010 Purpose
17.144.020 Initiation
17.144.030 Application
17.144.040 Planning Commission Hearing and Action
17.144.050 City Council Hearing and Action
17.144.060 Findings for Approval
17.144.070 Effective Dates

Chapter 17.148 - Public Notice and Hearings…….. 148-1

17.148.010 Purpose
17.148.020 Notice of Hearing
17.148.030 Notice of Pending Action
17.148.040 Scheduling of Hearing
17.148.050 Hearing Procedure
17.148.060 Recommendations
17.148.070 Decision and Notice

Chapter 17.152 - Appeals……152-1

17.152.010 Purpose
17.152.020 Appeal Subjects and Jurisdiction

Attachment: Draft Zoning Code Public Review 02.04.2016 (1392 : Zoning Code Update)

17.152.030 Filing and Processing of Appeals
17.152.040 Judicial Review

Chapter 17.156 - Post-Decision Procedures……...156-1

17.156.010 Purpose
17.156.020 Issuance of Permits
17.156.030 City Council Decisions
17.156.040 Effective Date of Decision
17.156.050 Conformance to Approved Plans
17.156.060 Performance Guarantees
17.156.070 Changes to an Approved Project
17.156.080 Time Limits and Extensions
17.156.090 Resubmittals
17.156.100 Permits to Run with the Land
17.156.110 Permit Revocation

Part 5 – Glossary

Chapter 17.160 - Glossary…… 160-1

Attachment: Draft Zoning Code Public Review 02.04.2016 (1392 : Zoning Code Update)

PART 1

Enactment and Applicability

Chapter 17.04 - Purpose and Effect of Zoning Code……..04-1

17.04.010 Title and Authority
17.04.020 Purpose of the Zoning Code
17.04.030 Relationship to the General Plan
17.04.040 Applicability of the Zoning Code

Chapter 17.08 - Interpretation…….. 08-1

17.08.010 Purpose
17.08.020 Authority
17.08.030 Rules of Interpretation
17.08.040 Procedures for Interpretation/Determinations
17.08.050 Zoning Code Enforcement

Chapter 17.12 - Zoning Districts and Map…… 12-1

17.12.010 Purpose
17.12.020 Zoning Districts
17.12.030 Zoning Map

Attachment: Draft Zoning Code Public Review 02.04.2016 (1392 : Zoning Code Update)

Attachment: Draft Zoning Code Public Review 02.04.2016 (1392 : Zoning Code Update)

Chapter 17.04 – PURPOSE AND EFFECT OF ZONING CODE

Sections:

17.04.010 Title and Authority
17.04.020 Purpose of the Zoning Code
17.04.030 Relationship to the General Plan
17.04.040 Applicability of the Zoning Code

17.04.010 Title and Authority

Title 17 of the Capitola Municipal Code shall be known and cited as the "Capitola Zoning Code" and referred to in this title as "the Zoning Code." The Zoning Code is adopted pursuant to the authority in Section 65850 of the California Government Code.

17.04.020 Purpose of the Zoning Code

A. General. The purpose of the Zoning Code is to implement the General Plan and to protect the public health, safety, and welfare.

B. Specific. The Zoning Code is intended to:

1. Preserve and enhance Capitola's small-town feel and coastal village charm.
2. Ensure that all development exhibits high-quality design that supports a unique sense of place.
3. Protect and enhance the quality of life in residential neighborhoods.
4. Encourage active and inviting commercial and mixed-use areas.
5. Support a vibrant, diverse, and dynamic local economy.
6. Allow for a broad range of housing choices that meets the needs of all segments of the community.
7. Protect and enhance natural resources that contribute to Capitola's unique identify and scenic beauty.
8. Maintain and enhance coastal access and visitor-serving facilities and services.
9. Protect and preserve the Capitola's historic resources.
10. Support a balanced transportation system that accommodates the needs of automobiles, pedestrians, and bicycles.

17.04.030 Relationship to the General Plan

The Zoning Code implements the General Plan by regulating the use of land and structures in Capitola. If the Zoning Code conflicts with the General Plan, the General Plan governs.

Attachment: Draft Zoning Code Public Review 02.04.2016 (1392 : Zoning Code Update)

17.04.040 Applicability of the Zoning Code

A. Applicability to Property. The Zoning Code applies to all land, uses, and structures within the Capitola city limits.

B. Compliance with Regulations. All uses, structures, and development activity in Capitola shall comply with the Zoning Code.

C. Conflicting Regulations. Where conflict occurs with other City regulations or with State or federal laws, higher law shall control over lower law unless local variation is permitted. Where conflicting laws are of equal stature, the more restrictive shall control unless otherwise specified in the Zoning Code or in State or federal law.

Attachment: Draft Zoning Code Public Review 02.04.2016 (1392 : Zoning Code Update)

Chapter 17.08 – INTERPRETATION

Sections:

17.08.010 Purpose
17.08.020 Authority
17.08.030 Rules of Interpretation
17.08.040 Procedures for Interpretation/Determinations
17.08.050 Zoning Code Enforcement

17.08.010 Purpose

This chapter establishes rules and procedures for interpreting the Zoning Code to ensure that it is applied and enforced in a consistent manner.

17.08.020 Authority

The City Council delegates to the Community Development Director and the Director's designees the authority to interpret the meaning and applicability of all provisions in the Zoning Code.

17.08.030 Rules of Interpretation

A. General Rules. Rules of interpretation in Municipal Code Chapter 1.04 (General Provisions) apply to the Zoning Code. The following general rules also apply to the interpretation and application of the Zoning Code.

1. In the event of any conflict between the provisions of this Zoning Code, the most restrictive requirement shall control.
2. Where there is a conflict between text and any figure, illustration, graphic, heading, map, table, or caption, the text governs.
3. The words "shall," "will," "is to," and "are to" are mandatory. "Should" means a regulation that is not mandatory, but must be either fulfilled or the applicant must demonstrate an alternative that fulfills the intent of the regulation or that a non-economic hardship makes compliance infeasible. "May" is permissive.
4. The following conjunctions are interpreted as follows
   a. "And" means that all items or provisions so connected apply.
   b. "Or" means that all items or provisions so connected apply singularly or in any combination.
   c. "Either . . . or" means that one of the items or provisions so connected apply singularly, but not in combination.
5. All officials, bodies, agencies, ordinances, policies, and regulations referred to in the Zoning Code are those of Capitola unless otherwise noted.

Attachment: Draft Zoning Code Public Review 02.04.2016 (1392 : Zoning Code Update)

B. Calendar Days. Numbers of days specified in the Zoning Code are continuous calendar days unless otherwise noted. Where the last of a number of days falls on a holiday or weekend, time limits are extended to the following working day.

C. Land Use Regulation Tables. Land use regulation tables in Part 2 (Zoning Districts and Overlay Zones) establish permitted land uses within each zoning district. Notations within these tables have the following meanings:

1. **Permitted Uses.** A "P" means that a use is permitted by right in the zoning district and is not subject to discretionary review and approval.
2. **Administrative Permit**. An "A" means the use is permitted with the approval of an Administrative Permit.
3. **Minor Use Permit**. An "M" means that a use requires approval of a Minor Use Permit.
4. **Conditionally Permitted Uses**. A "C" means that a use requires approval of a Conditional Use Permit.
5. **Uses Not Allowed.** A "-" means that a use is not allowed in the zoning district.

Note: Procedures and criteria for addressing unlisted land uses in Subsection D below are new.

D. Unlisted Land Uses. If a proposed land use is not listed in the Zoning Code, the use is not permitted except as follows:

1. An unlisted use is not permitted if the use is listed as a permitted use in one or more other zoning districts. In such a case, the absence of the use in the zoning district within the land use table means that the use is prohibited in the zoning district.
2. The Community Development Director may determine that an unlisted proposed use is equivalent to a permitted or conditionally permitted use if all of the following findings can be made:
   a. The use is similar to other uses allowed in the zoning district.
   b. The density or intensity of the use is similar to other uses in the zoning district.
   c. The use is compatible with permitted or conditionally permitted uses in the zoning district.
   d. The use will meet the purpose of the zoning district.
   e. The use is consistent with the goals and policies of the General Plan.
   f. The use will not be detrimental to the public health, safety, or welfare.
3. When the Community Development Director determines that a proposed use is equivalent to a listed use, the proposed use shall be treated in the same manner as the listed use with respect to development standards, permits required, and all applicable requirements of the Zoning Code.

E. Zoning Map Boundaries. Where uncertainty exists as to the boundaries of zoning districts as shown on the Zoning Map, the following rules apply:

1. Boundaries shown as approximately following the centerlines of streets, highways, or alleys are construed to follow the centerlines.
2. Boundaries shown as approximately following platted lot lines are construed as following the lot lines.
3. Boundaries shown as approximately following city limits are construed as following city limits.
4. Boundaries shown following railroad lines are construed to be midway between the main tracks.
5. In unsubdivided property or where a zoning district boundary divides a parcel, the location of the boundary are determined by the use of the scale appearing on the Zoning Map.
6. In case further uncertainty exists, the Community Development Director shall determine the exact location of the boundaries. The Director's decision may be appealed to the Planning Commission to determine the exact location of the boundaries.

F. Parcels Containing Two or More Zoning Districts.

1. For parcels containing two or more zoning districts ("split zoning"), the location of the zoning district boundary shall be determined by the Community Development Director. The Director's decision may be appealed to the Planning Commission to determine the exact location of the boundaries.
2. For parcels containing two or more zoning districts, the regulations for each zoning district shall apply within the zoning district boundaries as identified on the Zoning Map.

17.08.040 Procedures for Interpretation/Determinations

Note: Procedures for responding to Zoning Code interpretation requests in Section 17.08.040 are new.

A. Request for Interpretation. The Community Development Director shall respond in writing to written requests for interpretation of the Zoning Code if the requested interpretation would substantially clarify an ambiguity which interferes with the effective administration of the Zoning Code. The following procedures apply for a request for interpretation:

1. The request shall be in writing, shall identify the provision to be interpreted, and shall be accompanied by the fee identified in the latest Fee Schedule.

Attachment: Draft Zoning Code Public Review 02.04.2016 (1392 : Zoning Code Update)

2. The request shall provide any information that the Director requires to assist in its review.

3. The Director shall respond to an interpretation request within 30 days of receiving the request.

B. Form and Content of Interpretation. Official interpretations prepared by the Director shall be in writing, and shall quote the Zoning Code provisions being interpreted. The interpretation shall describe the circumstance that caused the need for the interpretation.

C. Official Record of Interpretations. An official record of interpretations shall be kept and updated regularly by the Community Development Department. The record of interpretations shall be indexed by the number of the section that is the subject of the interpretation and made available for public inspection during normal business hours.

D. Referral to Planning Commission. The Director may refer any request for interpretation of the Zoning Code to the Planning Commission for review and interpretation.

E. Appeals. Any official interpretation prepared by the Director may be appealed to the Planning Commission. The Planning Commission's interpretation may be appealed to the City Council. Appeals shall be accompanied by the fee identified in the latest Fee Schedule.

17.08.050 Zoning Code Enforcement

Enforcement of the Zoning Code shall occur in a manner consistent with Capitola Municipal Code Title 4 (General Municipal Code Enforcement).

Attachment: Draft Zoning Code Public Review 02.04.2016 (1392 : Zoning Code Update)

Chapter 17.12 – ZONING DISTRICTS AND MAP

Sections:

17.12.010 Purpose
17.12.020 Zoning Districts
17.12.030 Zoning Map

17.12.010 Purpose

This chapter identifies the zoning districts that apply to land within the Capitola city limits and establishes the official Capitola Zoning Map.

17.12.020 Zoning Districts

A. Base Zoning Districts. Capitola is divided into zoning districts that implement the General Plan Land Use Map as shown in Table 17.12-1.

Note: There have been some changes to existing zoning districts and overlay zones as shown in Table 17.12-1 and Table 17.12.-2. Changes include creating a new Neighborhood Mixed Use zoning districts for portions of Capitola Road and Capitola Avenue, distinguishing between the Community Commercial and Regional Commercial zoning districts along 41st Avenue, deleting the Automatic Review overlay, and changing the Archaeological/Paleontological Resources overlay and Geological Hazards overlay into citywide standards.

TABLE 17.12-1: BASE ZONING DISTRICTS

Zoning District Symbol	Name of Zoning District	General Plan Land Use Designation
Residential Zoning Districts		
R-1	Single-Family Residential	Single-Family Residential (R-SF)
RM-L	Multi-Family Residential, Low Density	Multi-Family Residential (R-MF)
RM-M	Multi-Family Residential, Medium Density	
RM-H	Multi-Family Residential, High Density	
MH	Mobile Home Park	Mobile Home Park (MH)
Mixed-Use Zoning Districts		
MU-V	Village Mixed Use	Village Mixed-Use (MU-V)
MU-N	Neighborhood Mixed Use	Neighborhood Mixed-Use (MU-N)

Attachment: Draft Zoning Code Public Review 02.04.2016 (1392 : Zoning Code Update)

Zoning District Symbol	Name of Zoning District	General Plan Land Use Designation
Commercial and Industrial Zoning Districts		
C-C	Community Commercial	Community Commercial (C-C)
C-R	Regional Commercial	Regional Commercial (C-R)
I	Industrial	Industrial (I)
Other Zoning Districts		
VS	Visitor Serving	Visitor Accommodations (VA)
CF	Community Facility	Public/Quasi-Public Facility (P/QP)
P/OS	Parks and Open Space	Parks and Open Space (P/OS)
PD	Planned Development	N/A

B. Overlay Zones. The Zoning Code and Zoning Map include the overlay zones shown in Table 17.12-2. Overlay zones impose additional regulations on properties beyond what is required by the underlying base zoning district.

TABLE 17.12-2: OVERLAY ZONES

Overlay Zone Symbol	Name of Overlay Zone
-AH	Affordable Housing
-VRU	Vacation Rental Use
-VR	Village Residential
-CZ	Coastal Zone

17.12.030 Zoning Map

A. Adoption. The City Council hereby adopts the Capitola Zoning Map ("Zoning Map"), which establishes the boundaries of all base zoning districts and overlay zones provided for in the Zoning Map.

B. Incorporation by Reference. The Zoning Map, including all legends, symbols, notations, references, and other information shown on the map, is incorporated by reference and made a part of the Zoning Code.

Attachment: Draft Zoning Code Public Review 02.04.2016 (1392 : Zoning Code Update)

C. Location. The Zoning Map is kept, maintained, and updated electronically by the Community Development Department, and is available for viewing by the public at the Department and on the official City of Capitola website.

Attachment: Draft Zoning Code Public Review 02.04.2016 (1392 : Zoning Code Update)

Attachment: Draft Zoning Code Public Review 02.04.2016 (1392 : Zoning Code Update)

PART 2

Zoning Districts and Overlay Zones

Chapter 17.16 - Residential Zoning Districts…….. 16-1

17.16.010 Purpose of the Residential Zoning Districts
17.16.020 Land Use Regulations
17.16.030 Development Standards

Chapter 17.20 - Mixed Use Zoning Districts…….. 20-1

17.20.010 Purpose of the Mixed Use Zoning Districts
17.20.020 Land Use Regulations
17.20.030 Development Standards

Chapter 17.24 - Commercial and Industrial Zoning Districts……... 24-1

17.24.010 Purpose of the Commercial and Industrial Zoning Districts
17.24.020 Land Use Regulations
17.24.030 Development Standards

Chapter 17.28 - Visitor Serving Zoning Districts…… 28-1

17.28.010 Purpose of the Visitor Serving Zoning Districts
17.28.020 Dual Zoning
17.28.030 Land Use Regulations
17.28.040 Development Standards

Chapter 17.32 - Special Purpose Zoning Districts……..32-1

17.32.010 Purpose of the Special Purpose Zoning Districts
17.32.020 Land Use Regulations
17.32.030 Development Standards

Chapter 17.36 - Planned Development Zoning District……36-1

17.36.010 Purpose of the Planned Development Zoning District
17.36.020 Where Allowed
17.36.030 Permitted Land Uses
17.36.040 Development Standards
17.36.050 Required Approvals
17.36.060 Preliminary Development Plans
17.36.070 Planned Development Rezoning
17.36.080 Final Development Plans

Attachment: Draft Zoning Code Public Review 02.04.2016 (1392 : Zoning Code Update)

Chapter 17.40 - Residential Overlay Zones…… 40-1

17.40.010 Purpose
17.40.020 Affordable Housing (-AH) Overlay Zone
17.40.030 Vacation Rental Use (-VRU) Overlay Zone
17.40.040 Village Residential (-VR) Overlay Zone

Chapter 17.44 - Coastal Overlay Zone…… 44-1

17.44.010 Purpose
17.44.020 Definitions
17.44.030 Relationship to Base Zoning Districts
17.44.040 Allowed Land Uses
17.44.050 Development Standards
17.44.060 Coastal Permit Requirements
17.44.070 Coastal Permit Exemptions
17.44.080 Categorical Exclusions
17.44.090 Challenges to City Determinations
17.44.100 Application Submittal
17.44.110 Public Notice and Hearing
17.44.120 Findings for Approval
17.44.130 Notice of Final Action
17.44.140 Appeals
17.44.150 Permit Issuance
17.44.160 Emergency Permits
17.44.170 Coastal Permit Amendments

Attachment: Draft Zoning Code Public Review 02.04.2016 (1392 : Zoning Code Update)

Chapter 17.16 - RESIDENTIAL ZONING DISTRICTS

Sections:

17.16.010 Purpose of the Residential Zoning Districts
17.16.020 Land Use Regulations
17.16.030 Development Standards

17.16.010 Purpose of the Residential Zoning Districts

A. General. The purpose of the residential zoning districts is to support attractive, safe, and friendly neighborhoods consistent with Capitola's intimate small-town feel and coastal village charm. Development within the residential zoning districts features high quality design that enhances the visual character of the community. The mass, scale, and design of new homes are compatible with existing homes in neighborhoods and are carefully designed to minimize impacts to existing homes. Residential zoning districts contain a range of housing types and community facilities to support diverse and complete neighborhoods with a high quality of life for residents.

B. Specific.

1. **Single-Family Residential (R-1) Zoning District**. The purpose of the R-1 zoning district is to protect and enhance the unique qualities of individual neighborhoods in Capitola. The R-1 zoning district allows for variation in development standards based on the existing development patterns within these neighborhoods. New development respects the existing scale, density, and character of neighborhoods to strengthen Capitola's unique sense of place.

2. **Multi-Family Residential (RM) Zoning District.** The purpose of the RM zoning district is to accommodate a range of housing types to serve all Capitola residents. The RM zoning districts allows single-family and multi-family housing at higher densities to maintain and increase the supply of affordable housing choices. Housing in the RM zoning districts is carefully designed to enhance Capitola's unique identity and to minimize impacts on adjacent land uses and structures. The RM zone is divided into three subzones (RM-L, RM-M, and RM-H) allowing for a range of permitted residential densities.

3. **Mobile Home Park (MH) Zoning District.** The MH zone provides areas for exclusive development of mobile home parks. Mobile home parks provide a valuable source of affordable housing serving Capitola's lower-income and senior residents.

17.16.020 Land Use Regulations

A. Permitted Land Uses. Table 17.16-1 identifies land uses permitted in the residential zoning districts.

Attachment: Draft Zoning Code Public Review 02.04.2016 (1392 : Zoning Code Update)

Note: Some land use terms in the existing Zoning Code have been changed in the updated Zoning Code to reflect current usage and State law. Despite this change, permitted land uses in the residential zoning districts have generally remained the same.

TABLE 17.16-1: PERMITTED LAND USES IN THE RESIDENTIAL ZONING DISTRICTS

Key **P** Permitted Use **A** Administrative Permit required **M** Minor Use Permit required **C** Conditional Use Permit required **–** Use not allowed	**Zoning District**			
	R-1	**RM**	**MH**	**Additional Regulations**
Residential Uses				
Duplex Homes	-	P	-	
Elderly and Long Term Care	-	C	-	
Group Housing	-	P	-	
Mobile Home Parks	-	C	P [1]	Chapter 17.100
Multi-Family Dwellings	-	P	-	
Residential Care Facilities, Small	P	P	C [2]	
Residential Care Facilities, Large	C	C	C [2]	Section 17.96.080
Secondary Dwelling Units	A	A	-	Chapter 17.74
Single-Family Dwellings	P	P	C [2]	
Public and Quasi-Public Uses				
Community Assembly	C	C	C	
Day Care Centers	C	C	C	
Home Day Care, Large	M	M	M	Section 17.96.070
Home Day Care, Small	P	P	P	
Parks and Recreational Facilities	-	C	C	
Schools, Public or Private	-	C	C	
Commercial Uses				
Bed and Breakfast	C	C	-	
Vacation Rentals	See Section 17.32.040			
Transportation, Communication, and Utility Uses				
Utilities, Major	C	C	C	
Utilities, Minor	P	P	P	
Wireless Communications Facilities	See Chapter 17.104			
Other Uses				
Accessory Uses and Structure	P [3]	P [3]	P[3]	Chapter 17.52
Home Occupation	A	A	A	Chapter 17.96.040
Temporary Uses and Structures	M	M	-	Section 17.96.190
Urban Agriculture				
Home Gardens	P	P	P	

Key **P** Permitted Use **A** Administrative Permit required **M** Minor Use Permit required **C** Conditional Use Permit required **–** Use not allowed	Zoning District			
	R-1	**RM**	**MH**	**Additional Regulations**
Community Gardens	M	M	M	
Urban Farms	C	C	C	

Notes:
[1] May include offices incidental and necessary to conduct a mobile home park use.
[2] Permitted on the mobile home park parcel or on a separate parcel of no less than 5,000 square feet.
[3] An accessory structure that exceed the development standards of Chapter 17.52 requires a Conditional Use Permit.

B. Additional Permits. In addition to permits identified in Table 17.16-1, development projects in the residential zoning districts may also require a Design Permit pursuant to Chapter 17.120 (Design Permits). Modifications to a historic resource may require a Certificate of Appropriateness pursuant to Chapter 17.84 (Historic Preservation).

17.16.030 Development Standards

A. General Standards - Single-Family and Multi-Family Zoning Districts. Table 17.16-2 identifies development standards that apply in the R-1 and RM zoning districts.

TABLE 17.16-2: DEVELOPMENT STANDARDS IN THE R-1 AND RM ZONING DISTRICTS

	R-1	**RM**	**Additional Standards**
Site Requirements			
Parcel Area, Minimum	5,000 sq. ft.	N/A	
Parcel Width, Minimum	30 ft.	N/A	
Parcel Depth, Minimum	80 ft.	N/A	
Floor Area Ratio, Maximum	See Section 17.16.030.B.1	N/A	17.16.030.B 17.48.040
Parcel Coverage, Maximum	N/A	40%	
Parcel Area Per Unit, Minimum	N/A	RM-L: 4,400 sq. ft. RM-M: 2,900 sq. ft. RM-H: 2,200 sq. ft.	
Parking and Loading	See Chapter 17.76		
Structure Requirements			
Setbacks, Minimum			17.48.030
Front	Ground floor: 15 ft. Second story: 20 ft.	15 ft.	
Rear	20% of parcel depth; 25 ft. max.	15% of parcel depth	

Attachment: Draft Zoning Code Public Review 02.04.2016 (1392 : Zoning Code Update)

	R-1	RM	Additional Standards
Interior Side	Ground floor: 10% of parcel width; 3 ft. min.; 7 ft. max. Second story: 15% of parcel width	10% of parcel width	17.16.030.B. 4&5
Street Side, Corner Lots	10 ft.	10 ft.	17.16.030.B.3
Height, Maximum	25 ft.	RM-L: 30 ft. RM-M: 30 ft. RM-H: 35 ft.	17.16.030.B.6 & 7 17.48.020
Accessory Structures	See Chapter 17.52		

B. Additional Standards in the R-1 Zoning District. The following additional standards apply in the R-1 zoning district.

1. **Floor Area Ratio**. Table 17.16-3 identifies the maximum permitted floor area ratio (FAR) in the R-1 zoning district.

TABLE 17.16-3: MAXIMUM FLOOR AREA RATIO IN THE R-1 ZONING DISTRICT

Lot Size	Maximum FAR
2,650 sq. ft. or less	0.58
2,651 to 3,250 sq. ft.	0.57
3,251 to 3,500 sq. ft.	0.56
3,501 to 3,750 sq. ft.	0.55
3,751 to 4,000 sq. ft.	0.54
4,001 to 4,250 sq. ft.	0.53
4,251 to 4,500 sq. ft.	0.52
4,501 to 4,750 sq. ft.	0.51
4,751 to 5,000 sq. ft.	0.50 [1]
5,001 to 6,000 sq. ft.	0.49 [1]
More than 6,000 sq. ft.	0.48 [1]

Notes:
[1] Parcels of 5,000 sq. ft. or more with approved second dwelling units are permitted a maximum FAR of 0.60 for all structures.

2. **Front Setbacks in Riverview Terrace.** Within the areas shown in Figure 17.16-1, the Planning Commission may approve a reduced front setback to reflect existing front setbacks on neighboring properties on the same side of the street. The reduced front setback shall in all cases be no less than 10 feet.

Note: In the existing Zoning Code minimum front setbacks in Riverview Terrace may be reduced to the average of lots on same side of street within 500 feet of the subject property to a maximum of 10 feet. Paragraph 2 above allows minimum setbacks to be reduced to reflect existing front setbacks on neighboring properties on the same side of the street.

FIGURE 17.16-1: RIVERVIEW TERRACE

3. **Garage Setbacks.**

   a. Attached garages shall be setback a minimum of 5 feet behind the front or street side building wall of the primary structure. The Planning Commission may reduce this minimum setback to 3 feet in sidewalk exempt areas.

Attachment: Draft Zoning Code Public Review 02.04.2016 (1392 : Zoning Code Update)

b. Required setbacks for detached garages are identified in Chapter 17.52 (Accessory Structures).

4. **Corner Lots**. The minimum rear setback for reserve corner lots shall be the minimum interior side yard of the adjacent property, but no less than 4 feet. See Figure 17.16-2.

FIGURE 17.16-2: REVERSE CORNER LOT REAR SETBACK

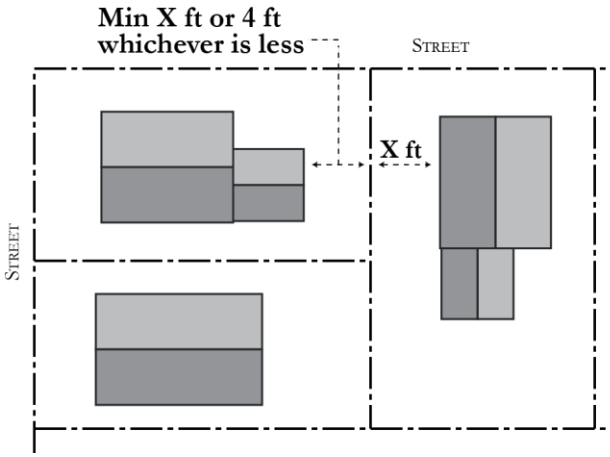

5. **Second Story Setback Exceptions.** Second story additions must comply with increased setback requirements in Table 17.16-2, except in the following cases:

   a. For lots 30 feet wide or less, the minimum interior side setback for a second story is the same as for the ground floor.

   b. Up to 20 percent of the length of an upper story wall may be constructed at the same setback as the first-floor wall if the first-floor wall is at least 4 feet from the side property line. See Figure 17.16-3.

FIGURE 17.16-3: SECOND STORY SETBACK EXCEPTION

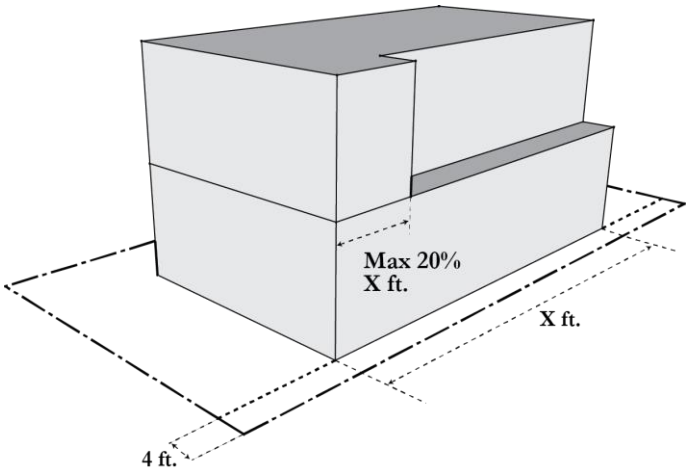

Attachment: Draft Zoning Code Public Review 02.04.2016 (1392 : Zoning Code Update)

Note: R-1 height exceptions in Paragraph 6 below are new.

6. **Height Exceptions.** A maximum height of up to 27 feet in the R-1 zoning district is allowed in the following circumstances:

   a. Additions to historic structures that is designed to match the roof pitch of the historic structure within the area of new addition.

   b. Parcels greater than 6,000 sf in size.

   c. Parcels with a width 60 feet or more.

   d. Parcels with an average slope of 25 percent or greater.

   e. When the plate height of structure does not exceed 22 feet.

7. **Plate Height in Side Setback Areas.** For portions of a building with four feet or less from an interior side property line, the maximum wall plate height is 12 feet. See Figure 17.16-4.

FIGURE 17.16-4: MAXIMUM PLATE HEIGHT

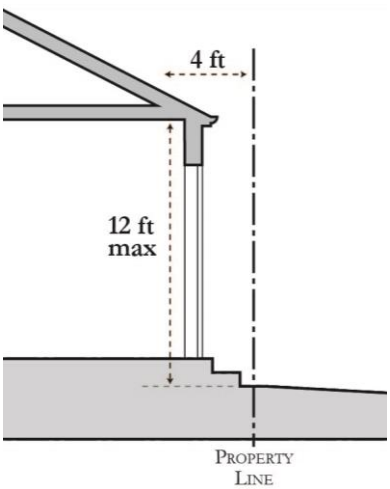

Note: Standards in Paragraph 8 below to allow decks and balconies with an Administrative Permit instead of a Design Permit are new.

8. **Decks and Balconies.**

   a. Upper floor decks and balconies on the side or rear of a residential structure are allowed with an Administrative Permit if the deck or balcony is:

      (1) Located 10 feet or more from property line and 20 feet or more from another single-family dwelling; and

Attachment: Draft Zoning Code Public Review 02.04.2016 (1392 : Zoning Code Update)

(2) Does not directly face a window, balcony, patio, or other usable open space of another single-family dwelling.

b. Decks and balconies that do not meet standards (1) and (2) above require Planning Commission approval of a Design Permit.

C. Additional Standards for RM Zoning Districts. The following additional standards apply in the RM zoning district.

1. **Single-Family Dwellings.** Single-family dwellings in RM zoning districts shall comply with the development standards that apply in the R-1 zoning district.

2. **Open Space.** Common and private open space in the RM zoning district shall be provided as shown in Table 17.16-4.

TABLE 17.16-4: USABLE OPEN SPACE IN RM ZONING DISTRICT

Common Open Space [1]	
Minimum area (percent of site area)	15% [2] [3]
Minimum horizontal dimension	15 ft.
Private Open Space [4]	
Minimum percentage of units with private open space	50%
Minimum area (for individual unit)	48 sq. ft.
Minimum horizontal dimension	4 ft.

Notes:
[1] Common open space shall be fully landscaped and accessible to all residents.
[2] Roof terraces and roof gardens may provide up to 50 percent of the required common open space area.
[3] The Planning Commission may allow reduced common open space to a minimum of 10 percent for projects less than one acre in size or for projects that provide additional private open space equal to or greater than the amount of reduced common open space.
[4] Private open space may include screened terraces, decks, balconies, and other similar areas

Note: The existing Zoning Code requires 50 percent of the required rear yard to be developed as common open space. Subsection C above requires 15 percent of the site area to be common open space. Ability to reduce common open space is new to provide flexibility for smaller infill projects.

D. Standards for the MH Zoning District. Table 17.16-5 identifies development standards that apply in the Mobile Home (MH) zoning district.

TABLE 17.16-5 MH ZONING DISTRICT DEVELOPMENT STANDARDS

		Additional Standards
Site Area [1]	5 acres [2]	
Residential Density, Maximum	20 units per acre	
Setbacks [3]		17.48.030
Front	15 ft.	
Interior Side	10 ft.	
Exterior Side	10 ft.	
Rear	20 ft.	

Notes:
[1] Applies to overall mobile home park area, not sites for individual units.
[2] For vacant property rezoned to MH, the minimum lot area is 5 acres. For existing mobile home parks, the minimum parcel size is 5 acres or the existing parcel size, whichever is less.
[3] Applies only to the perimeter of the mobile home park, not to sites and structures within the interior of the park.

Note: Minimum setbacks for the perimeter of the mobile home park in Table 17.16-5 above are new.

Attachment: Draft Zoning Code Public Review 02.04.2016 (1392 : Zoning Code Update)

Chapter 17.20 - MIXED USE ZONING DISTRICTS

Sections:

17.20.010 Purpose of the Mixed Use Zoning Districts
17.20.020 Land Use Regulations
17.20.030 Development Standards

17.20.010 Purpose of the Mixed Use Zoning Districts

A. General. The purpose of the mixed use zoning districts is to provide for active and inviting destinations in Capitola with a diversity of residential and commercial land uses. In the mixed use zoning districts development supports a lively, pedestrian-friendly public realm with inviting storefronts facing the sidewalk. A diversity of local and independent businesses, recreational amenities, and public spaces balance the needs of residents and visitors. New development respects Capitola's history and reflects its unique coastal village character. The diversity of land uses, pedestrian-friendly development, and general level of activity in the mixed use zoning districts supports a range of transportation choices, including walking, biking, and transit.

B. Specific.

1. **Village Mixed Use (MU-V) Zoning District**. The purpose of the MU-V zoning district is to preserve and enhance Capitola Village as the heart of the community. A diversity of commercial, residential, and recreational uses in the MU-V zoning district serve both visitors and residents. Land uses and development enhance the vitality of the Village while maintaining a high quality of life for residents. A fine-grain mix of retail, restaurants, services, and recreational amenities in the MU-V zoning district cater to all ages and support year-round activity during the day and night.

2. **Neighborhood Mixed Use (MU-N) Zoning District**. The purpose of MU-N zoning district is to allow for neighborhood-serving mixed use areas that enhance residents' quality of life. The MU-N zoning districts contain an eclectic mix of retail, restaurants, and services for residents and visitors. A range of housing types close to non-residential uses increases housing choices and supports a walkable community. Development in the MU-N zoning district is carefully designed to complement its surroundings and minimize impacts on neighboring properties. Land uses strengthen connections between destinations in Capitola, including the Village, Bay Avenue, and 41st Avenue.

17.20.020 Land Use Regulations

A. Permitted Land Uses. Table 17.20-1 identifies land uses permitted in the mixed use zoning districts.

Attachment: Draft Zoning Code Public Review 02.04.2016 (1392 : Zoning Code Update)

Note: Permitted land uses in the mixed use zoning districts have been revised to better reflect the purpose of the zoning districts. New Minor Use Permit required for uses that need discretionary review but may not need a Planning Commission hearing.

TABLE 17.20-1: PERMITTED LAND USES IN THE MIXED USE ZONING DISTRICTS

Key **P** Permitted Use **A** Administrative Permit required **M** Minor Use Permit required **C** Conditional Use Permit required **–** Use not allowed	**Zoning District**		
	MU-V	**MU-N**	**Additional Regulations**
Residential Uses			Section 17.20.020.B & C
Duplex Homes	P/C [1]	P	
Elderly and Long Term Care	C	C	
Group Housing	C	C	
Multi-Family Dwellings	P/C [1]	C	
Residential Care Facilities, Small	C	P	
Residential Care Facilities, Large	C	C	Section 17.96.080
Residential Mixed Use	See Section 17.20.020.D	C	
Secondary Dwelling Units	A	A	Chapter 17.74
Single-Family Dwellings	C [3]	P	
Public and Quasi-Public Uses			
Community Assembly	C	C	
Cultural Institutions	C	C	
Day Care Centers	M	M	
Government Offices	P/C [1]	M	
Home Day Care, Large	M	M	Section 17.96.070
Home Day Care, Small	P	P	
Medical Offices and Clinics	-	M	
Parks and Recreational Facilities	C	C	
Public Safety Facilities	C	C	
Schools, Public or Private	-	C	
Commercial Uses			
Alcoholic Beverage Sales	C	C	
Banks and Financial Institutions	C	P [2]	
Commercial Entertainment and Recreation	C	C	
Eating and Drinking Places			
Bars and Lounges	C	C	
Restaurants and Cafes	C	C	

Attachment: Draft Zoning Code Public Review 02.04.2016 (1392 : Zoning Code Update)

Key **P** Permitted Use **A** Administrative Permit required **M** Minor Use Permit required **C** Conditional Use Permit required **–** Use not allowed	Zoning District		
	MU-V	**MU-N**	**Additional Regulations**
Take-Out Food and Beverage	M	M	
Gas and Service Stations	-	-	
Lodging			
Bed and Breakfast	C	C	
Hotels and Motels	C	C	
Personal Services	P	P [2]	
Professional Offices	P/C [1]	M	
Retail	P	P [2]	
Vacation Rental	See Chapter 17.40		
Transportation, Communication, and Utility Uses			
Utilities, Major	C	C	
Utilities, Minor	P	P	
Wireless Communications Facilities	See Chapter 17.104		
Other Uses			
Accessory Uses and Structures	See Chapter 17.52		Chapter 17.52
Home Occupations	A	A	Section 17.96.040
Temporary Uses and Structures	See Section 17.96.170		
Urban Agriculture			
Home Gardens	P	P	
Community Gardens	M	M	
Urban Farms	C	C	

Notes:
[1] Second and third floor uses permitted by-right. Ground floor uses require a Conditional Use Permit.
[2] Larger than 3,000 sq. ft. requires a Conditional Use Permit.
[3] Permitted by-right in the Village Residential overlay zone

B. Village Residential Overlay. Pursuant to Section 17.40.040 (Village Residential (-VR) Overlay Zone), only residential uses are permitted in the -VR overlay zone. The Village Residential (-VR) overlay zone applies to the following areas within the MU-V zoning district: Six Sisters, Venetian Court, Lawn Way, Riverview Avenue, Cliff Drive, and Cherry Avenue.

C. Ground Floor Conversions to Residential. Existing ground floor commercial uses in the MU-V zoning district may not be converted to a residential use unless located in the Village Residential (-VR) overlay zone.

D. Residential Mixed Use in the MU-V Zoning District.

Attachment: Draft Zoning Code Public Review 02.04.2016 (1392 : Zoning Code Update)

1. If a proposed residential mixed use project in the MU-V zoning district contains any use that requires a Conditional Use Permit, the entire project, including the residential use, requires a Conditional Use Permit.
2. If a proposed residential use replaces an existing upper floor commercial use, the residential use is allowed by-right.

17.20.030 Development Standards

A. General. Table 17.20-2 identifies development standards that apply in the mixed use zoning districts.

Note: Minimum parcel dimensions and maximum front setbacks in Table 17-20-2 below are new.

TABLE 17.20-2: DEVELOPMENT STANDARDS IN THE MIXED USE ZONING DISTRICTS

	Zoning District		Additional Standards
	MU-V	MU-N	
Site Requirements			
Parcel Area, Minimum	3,000 sq. ft.	5,000 sq. ft.	
Parcel Width, Minimum	30 ft.	50 ft.	
Parcel Depth, Minimum	100 ft.	100 ft.	
Floor Area Ratio, Maximum	2.0	1.0	
Parking and Loading	See Chapter 17.76		
Structure Requirements			
Setbacks			
Front	Min: 0 ft. Max: 15 ft.	Min: 0 ft. from property line or 10 ft. from curb, whichever is greater Max: 25 ft.	Section 17.20.030.D
Rear	None [1]	10 ft. min. from property line [1] [2] [3]	
Interior Side	None	10% of lot width [2] [3]	
Street Side	Min: 0 ft. Max: 15 ft.	Min: 0 ft. from property line or 10 ft. from curb, whichever is greater Max: 25 ft.	
Height, Maximum	27 ft.	27 ft.	Section 17.20.030.B Section 17.48.020
Accessory Structures	See Chapter 17.52		

Notes:
[1] 20% of lot depth for residential use on parcel.

Attachment: Draft Zoning Code Public Review 02.04.2016 (1392 : Zoning Code Update)

[2] The Planning Commission may approve reduced front, side, and rear setback requirements for properties fronting Capitola Avenue north of the trestle up to and including 431 Capitola Avenue.
[3] The Planning Commission may reduce front, side, and rear setbacks when a parcel is adjacent to commercial along the side and rear property lines and when the parcel width or depth is significantly less than typical parcels within the zoning district.

Note: MU-V height exceptions to allow up to 30 feet in subsection B below are new.

B. MU-V Height Exceptions. The following exceptions are permitted to the maximum permitted height in the MU-V zoning district as shown in Table 17.20-2:

1. Up to 30 feet for habitable space with a roof pitch of at least 5/12. See Figure 17.20-1.
2. Projections for non-habitable decorative features and structures as allowed by Section 17.48.030.C

FIGURE 17.20-1: INCREASED HEIGHT IN THE MU-V ZONING DISTRICT

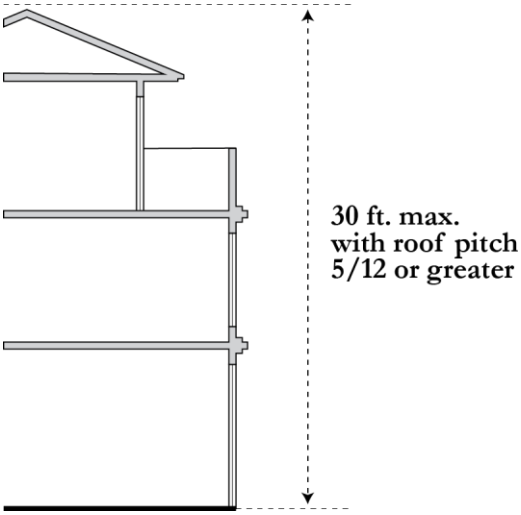

Note: Design standards for the mixed use zoning districts in subsection C below are new.

C. General Design Standards. The following standards apply to all new buildings in the MU-V and MU-N zoning districts.

1. **Building Orientation**. Buildings shall be oriented towards a public street with the primary entrance to the site or building directly accessible from an adjacent sidewalk. See Figure 17.20-2.

Attachment: Draft Zoning Code Public Review 02.04.2016 (1392 : Zoning Code Update)

FIGURE 17.20-2: BUILDING ORIENTATION

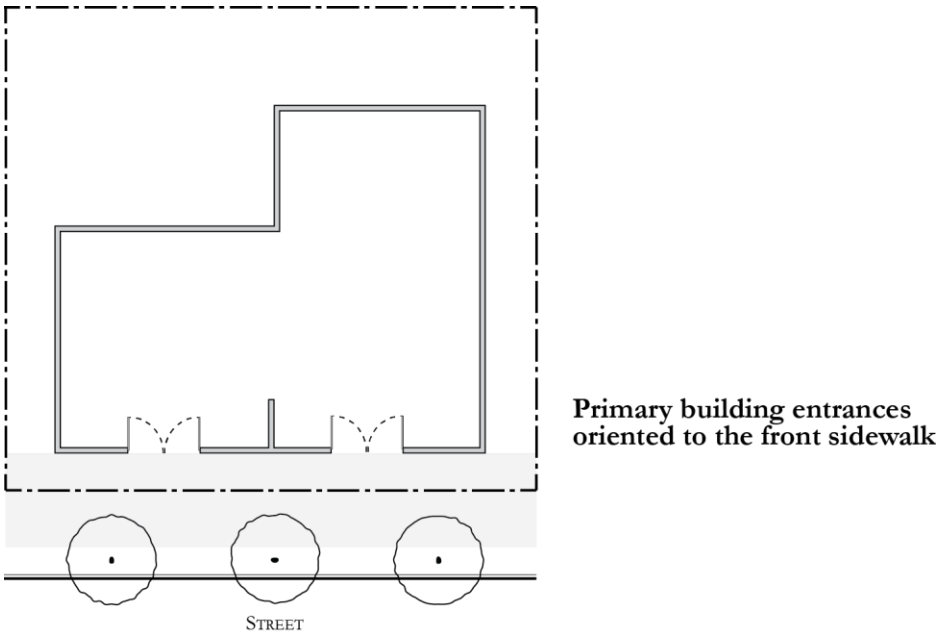

2. **Blank Walls**. The maximum length of an unarticulated/blank building wall fronting a public street shall be 10 feet. See Figure 17.20-3. Building articulation may be provided by:

   a. Doors, windows, and other building openings;

   b. Building projections or recesses, doorway and window trim, and other details that provide architectural articulation and design interest;

   c. Varying wall planes, heights or contrasting materials and colors; and

   d. Awnings, canopies or arcades to reinforce the pedestrian scale and provide shade and cover from the elements.

FIGURE 17.20-3: BLANK WALL LIMITATIONS

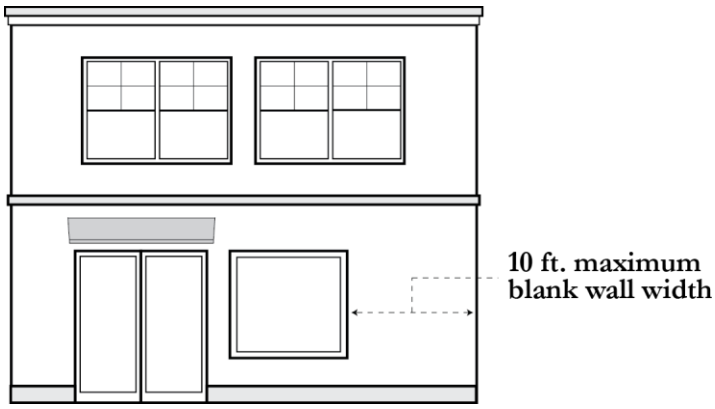

Attachment: Draft Zoning Code Public Review 02.04.2016 (1392 : Zoning Code Update)

3. **Storefront Width**. The maximum building/storefront width shall be 25 feet. See Figure 17.20-4. Larger buildings shall be broken down into a pedestrian-scale rhythm with individual building bay widths of 25 feet.

FIGURE 17.20-4: STOREFRONT WIDTH

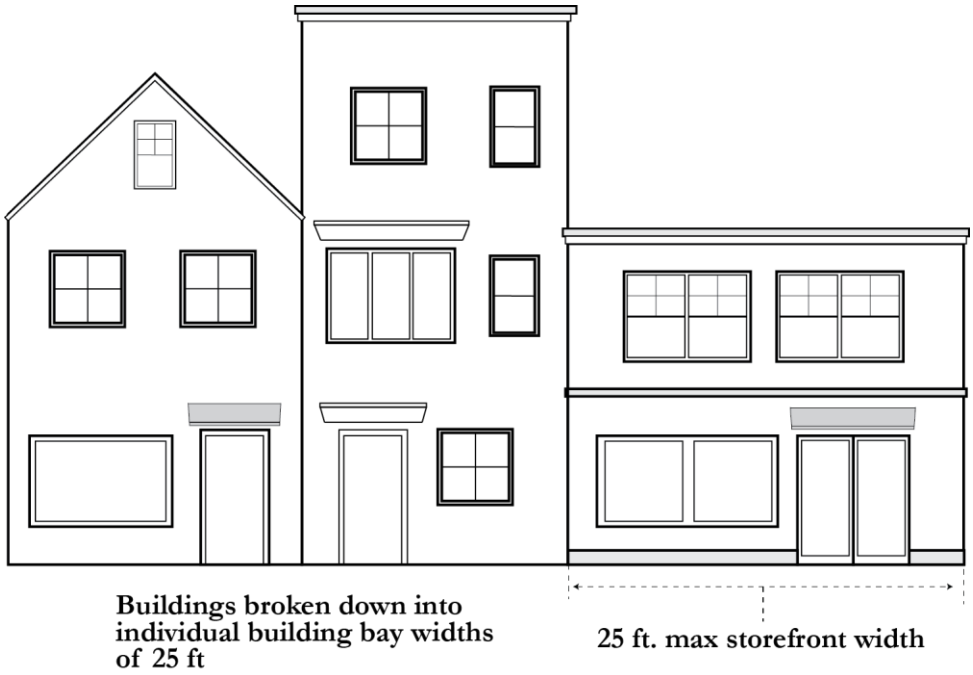

4. **Ground Floor Building Transparency.**

   a. The ground floor street-facing building walls of non-residential uses shall provide transparent windows or doors with views into the building for a minimum of 65 percent of the building frontage located between 2½ and 7 feet above the sidewalk. See Figure 17.20-5. Ninety percent of the transparent windows or doors area shall remain clear to allow views into the building.

FIGURE 17.20-5: STOREFRONT TRANSPARENCY

Attachment: Draft Zoning Code Public Review 02.04.2016 (1392 : Zoning Code Update)

b. Exceptions to this transparency requirement may be allowed with a Design Permit if the Planning Commission finds that:
   (1) The proposed use has unique operational characteristics which preclude building openings, such as for a cinema or theatre; and
   (2) Street-facing building walls will exhibit architectural relief and detail, and will be enhanced with landscaping in such a way as to create visual interest at the pedestrian level.

5. **Parking Location and Buffers.**

   a. Surface parking shall be located to the rear or side of buildings. Surface parking may not be located between a building and a street-facing property line. See Figure 17.20-6.

   b. Surface parking adjacent to a street-facing property line shall be screened along the public right-of-way with a decorative wall, hedge, trellis, and/or landscaping at least 3 feet in height.

   c. Loading areas shall be located to the side and rear of buildings, and shall be sufficiently screened from the public right-of-way, as determined by the Community Development Director.

FIGURE 17.20-6: PARKING LOCATION

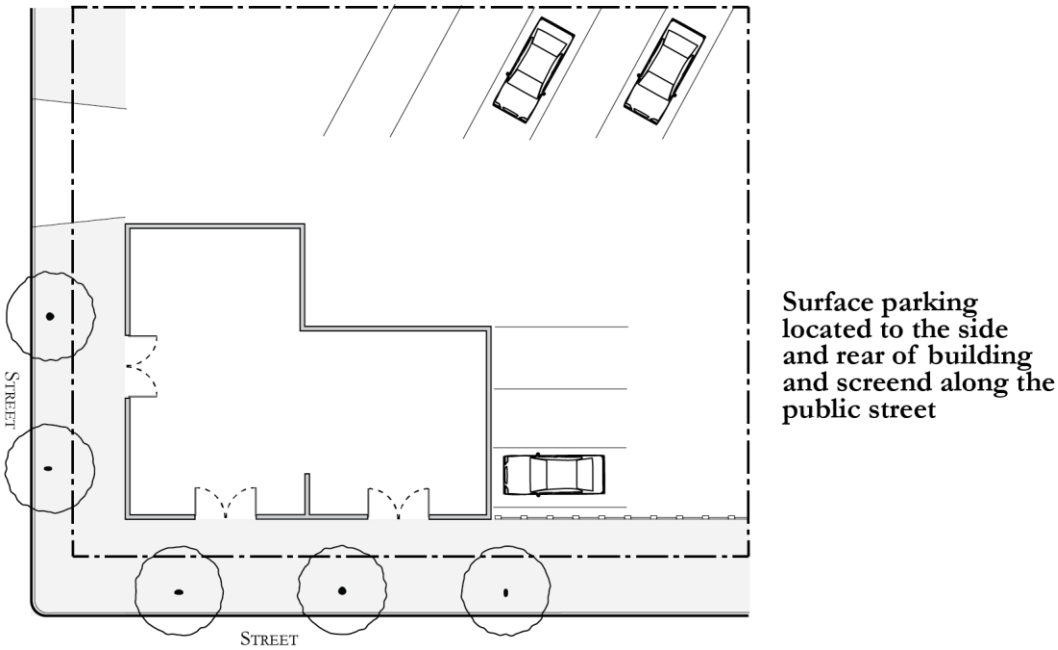

6. **Driveways and Curb Cuts.**

   a. New driveways shall comply with the dimension standards shown in Table 17.20-3 (Driveway Dimension Standards). The Community Development Director may approve exceptions to these standards in the case of shared or joint use of driveways and parking lots.

Attachment: Draft Zoning Code Public Review 02.04.2016 (1392 : Zoning Code Update)

TABLE 17.20-3: DRIVEWAY DIMENSION STANDARDS

Driveway Type	Driveway Width	
	Minimum	Maximum
1-way	8 ft.	12 ft.[1]
2-way	20 ft.	25 ft. [1].

Note: [1] Driveways shall not exceed 40% of parcel width.

b. New curb cuts, where allowed, shall be located and designed to maximize safety and convenience for pedestrians, bicycles and mass transit vehicles, as determined by the Community Development Director.

Note: Minimum build-to requirements in the MU-V zoning district in subsection D below are new.

D. Setbacks in the MU-V Zoning District. The following setback standards apply to all new structures in the MU-V zoning district.

1. Building shall be constructed at the front property line for a minimum of 50 percent of the parcel's linear street frontage. See Figure 17.20-7. The Planning Commission way modify or waive this requirement upon finding that:

   a. Compliance with the build-to width requirement would render the proposed project infeasible;

   b. The project incorporates a front-facing courtyard of public seating area; or

   c. An alternative site design would result in an enhanced pedestrian experience.

FIGURE 17.20-7: BUILD TO LINE – MU-V ZONING DISTRICT

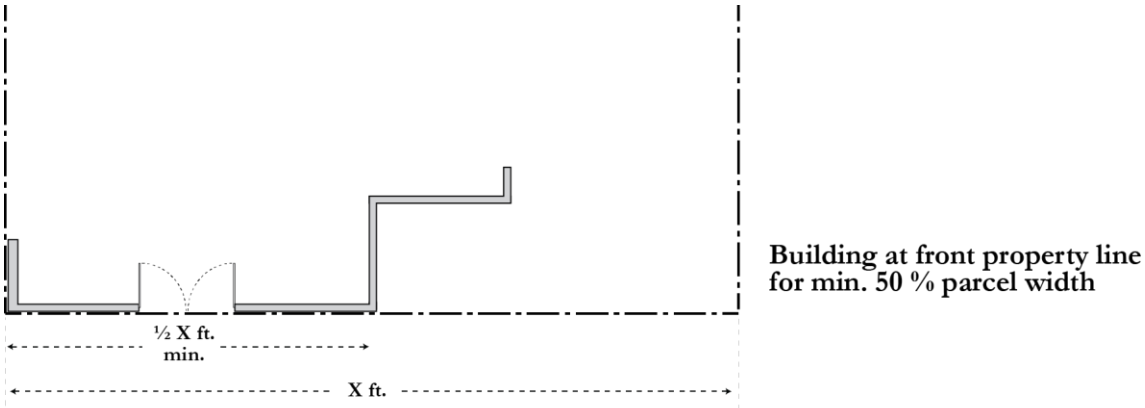

2. Front setback areas shall be pedestrian oriented and contain semi-public amenities such as courtyards or outdoor seating areas.

Attachment: Draft Zoning Code Public Review 02.04.2016 (1392 : Zoning Code Update)

3. Structures shall be setback a minimum of 10 feet from the property line on the northerly side of the first two hundred fifty feet of Cliff Drive, west of the intersection of Wharf Road.

E. Setbacks in the MU-N Zoning District. Front setback areas in the MU-N Zoning District shall be pedestrian oriented and shall be either landscaped or contain semi-public amenities such as courtyards or outdoor seating areas.

Note: Height and FAR standards for the Village hotel are new to implement General Plan policies.

F. Height and FAR Standards for the Village Hotel

1. **General.** The City Council may approve exceptions to height and floor area ratio (FAR) limits shown in Table 17.20-2 for a hotel on the former Village theater site (APN 035-262-04) in the MU-V zoning district. These exceptions are intended to facilitate the development of a new hotel in the Capitola Village consistent with the General Plan.

2. **Maximum FAR**. The City Council may allow a maximum FAR of 3.0 for a proposed hotel on the former Village theater site.

3. **Height.** The City Council may allow an exception to the 27-foot height limit for a proposed hotel on the former Village theater site, provided that:

   a. The maximum height of the hotel remains below the elevation of the bluff behind the hotel; and

   b. The bluff behind the hotel remains visible from the Capitola wharf as a green edge with existing mature trees maintained on site.

4. **Basis for Approval**. To approve increased FAR and/or height, the City Council must make all of the following findings:

   a. The design of the hotel respects the scale and character of neighboring structures and enhances Capitola's unique sense of place.

   b. The additional height and/or FAR allows for a superior project with substantial community benefit.

   c. The hotel will contribute to the economic vitality of the Village and support an active, attractive, and engaging pedestrian environment.

   d. The hotel design minimizes impacts to public views of the beach and Village from vantage points outside of the Village.

   e. Parking for the hotel is provided in a way that minimizes vehicle traffic in the Village and strengthens the Village as a pedestrian-oriented destination.

   f. The project is designed to minimize adverse impacts to neighboring properties to the greatest extent possible.

Attachment: Draft Zoning Code Public Review 02.04.2016 (1392 : Zoning Code Update)

Chapter 17.24 – COMMERCIAL AND INDUSTRIAL ZONING DISTRICTS

Sections:

17.24.010 Purpose of the Commercial and Industrial Zoning Districts
17.24.020 Land Use Regulations
17.24.030 Development Standards

17.24.010 Purpose of the Commercial and Industrial Zoning Districts

A. Community Commercial (C-C) Zoning District. The purpose of the C-C zoning district is to provide areas for a variety of commercial uses serving Capitola residents and visitors. The C-C zoning district allows for retail, restaurants, and services that meet the daily needs of the community. The scale, intensity, and design of development in the C-C zoning district is compatible with adjacent neighborhoods and contributes to Capitola's unique coastal village character. Interspersed residential and office uses in the C-C zoning district support a diverse local economy and range of housing choices.

B. Regional Commercial (C-R) Zoning District. The purpose of the C-R zoning district is to provide areas for commercial uses that serve regional shoppers as well as Capitola residents, workers, and visitors. The C-R zoning district maintains a critical mass of retail and service uses that maintain 41st Avenue as a successful retail destination. Office, medical, and residential uses are restricted in prime retail locations to protect the long-term economic vitality of the corridor. Incremental redevelopment of underutilized properties in the C-R zoning district enhance the corridor as a pedestrian-friendly shopping destination that enhance Capitola's unique identity and quality of life.

C. Industrial (I) Zoning District. The purpose of the I zoning district is to provide an area for heavy commercial and light industrial uses in Capitola. The I zoning district allows for non-residential uses which are desired in the community but could be incompatible with land uses in other zoning districts. The I zoning district accommodates businesses that contribute to a diverse economy, provide local jobs, and serve the needs of residents and other businesses in Capitola.

17.24.020 Land Use Regulations

A. Permitted Land Uses. Table 17.24-1 identifies land uses permitted in the commercial and industrial zoning districts.

Note: Permitted land uses in the commercial and industrial zoning districts have been revised to better reflect the purpose of the zoning districts. New Minor Use Permit required for uses that need discretionary review but may not need a Planning Commission hearing.

Attachment: Draft Zoning Code Public Review 02.04.2016 (1392 : Zoning Code Update)

TABLE 17.24-1: PERMITTED LAND USES IN COMMERCIAL AND INDUSTRIAL ZONING DISTRICTS

Key **P** Permitted Use **A** Administrative Permit required **M** Minor Use Permit required **C** Conditional Use Permit required **–** Use not allowed	**Zoning District**			
	C-C	**C-R**	**I**	**Additional Requirements**
Residential Uses				
Multi-Family Dwellings	C	C [5]	-	
Residential Mixed Use	C	C	-	17.96.140
Public and Quasi-Public Uses				
Colleges and Trade Schools	C	C	C	
Community Assembly	C	C	-	
Cultural Institutions	C	C	-	
Day Care Centers	C	C	-	
Emergency Shelters	-	-	P	17.96.030
Government Offices	See 17.24.020.C		C	
Medical Offices and Clinics	See 17.24.020.C		-	
Public Safety Facilities	C	C	C	
Commercial Uses				
Alcoholic Beverage Sales	C	C	C	
Banks and Financial Institutions	P [2]	P [2]	-	
Business Services	P [2]	P [2]	P	
Commercial Entertainment and Recreation	M	M	-	
Drive-Through Facilities	C [4]	C [4]	-	
Eating and Drinking Establishments				
Bars and Lounges	C	C	-	
Restaurants and Cafes	M [2]	M [2]	-	
Take-Out Food and Beverage	M [2]	M [2]	-	
Food Preparation	M [2]		P	
Gas and Service Stations	C	C	-	
Liquor Stores	C	C	-	
Lodging				
Bed and Breakfast	C	-	-	
Hotel	C	C	-	
Maintenance and Repair Services	M	C	P	
Personal Services	P [1]	P [1]	-	
Professional Offices	See 17.24.020.C		P	

Attachment: Draft Zoning Code Public Review 02.04.2016 (1392 : Zoning Code Update)

Salvage and Wrecking	-	-	P	
Self-Storage	C		C	17.96.150
Retail	P	P	-	
Vehicle Repair	C	C	P	
Vehicle Sales and Rental	C	C	-	
Wholesaling	-	M [3]	P	
Heavy Commercial and Industrial Uses				
Construction and Material Yards	-	-	P	
Custom Manufacturing	M	M	P	
Light Manufacturing	-	-	P	
Warehousing and Distribution	-	-	P	
Transportation, Communication, and Utility Uses				
Utilities, Major	-	C	C	
Utilities, Minor	P	P	P	
Recycling Collection Facilities	See 17.76.130			
Wireless Communications Facilities	See 17.104			
Other Uses				
Accessory Uses	See 17.52			
Home Occupations	A	A	-	Chapter 17.96.040
Temporary Uses	See 17.76.190			
Urban Agriculture				
Home Garden	P	P	-	
Community Garden	M	M	-	
Urban Farm	C	C	-	

Notes:
[1] Combination of two or more tenant suites within a multi-tenant building or greater than 5,000 sq. ft. requires Minor Use Permit
[2] Combination of two or more tenant suites within a multi-tenant building or greater than 5,000 sq. ft. requires Conditional Use Permit
[3] Without stock. Storage of merchandise limited to samples only.
[4] Prohibited within 100 feet of a residential zoning district or residential use.
[5] Permitted only on a mixed use site with the residential use secondary to the primary commercial uses on the site. Residential uses on the site are limited to less than 50 percent of the floor area of buildings on the site. Residential uses shall be located and designed to maintain a primarily commercial character and function on the site.

B. Additional Permits. In addition to permits identified in Table 17.24-1, development projects in the commercial and industrial zoning districts may also require a Design Permit pursuant to Chapter 17.120 (Design Permits). Modifications to a historic resource may require a Certificate of Appropriateness pursuant to Chapter 17.84 (Historic Preservation).

Note: Limitations on office uses in subsection C below are new.

C. Office Uses in the C-C and C-R Zoning Districts. In the C-C and C-R zoning districts, permits required for office uses, including professional, medical, banks, financial institutions and governmental offices, are shown in Table 17.24-2.

Attachment: Draft Zoning Code Public Review 02.04.2016 (1392 : Zoning Code Update)

TABLE 17.24-2: PERMITTED OFFICE USES IN THE C-C AND C-R ZONING DISTRICTS

Location and Size of Office Use	C-C Zoning District	C-R Zoning District
Conversion of a retail use to an office use	N/A	C
Ground floor, less than 5,000 sq. ft.	P	C
Ground floor, 5,000 sq. ft. or more	C	C
Upper floor above a ground floor	P	P
Located within a multi-tenant site in which the office space is not located within a storefront and is setback from the front façade.	P	P

17.24.030 Development Standards

A. General. Table 17.24-3 identifies development standards that apply in the commercial and industrial zoning districts.

TABLE 17.24-3: DEVELOPMENT STANDARDS IN COMMERCIAL AND INDUSTRIAL ZONING DISTRICTS

	C-C	C-R	I	Additional Standards
Site Requirements				
Parcel Area, Minimum	5,000 sq. ft.			
Parcel Width, Minimum	50 ft.			
Parcel Depth, Minimum	100 ft.			
Floor Area Ratio, Maximum	1.0	1.5	0.5	17.24.030.C
Residential Density, Maximum	20 du/acre		N/A	
Structure Requirements				
Setbacks, Minimum				
Front	See 17.24.030.B		0 ft.	
Rear	0 ft. unless adjacent to a residential zoning district (see 17.24.030.D)			
Interior Side	0 ft. unless adjacent to a residential zoning district (see 17.24.030.D)			
Street Side	See 17.24.030.B		0 ft.	
Height, Maximum	40ft.	40 ft.	30 ft.	17.24.030.C & D
Landscaped Open Space, Minimum	5%		10%	17.72
Parking and Loading	See 17.76			

Notes:

Attachment: Draft Zoning Code Public Review 02.04.2016 (1392 : Zoning Code Update)

[1] 15 ft. min. from property line abutting a residential zoning district.

B. Front and Street Side Setbacks in the C-R and C-C Zoning Districts. In the C-R and C-C zoning districts, buildings shall be setback from the front and street side property line so that:

1. The building is at least 15 feet from the curb or street edge; and
2. Building placement allows for a minimum 10-foot sidewalk along the property frontage. See Figure 17.24-1.

Note: The existing Zoning Code requires front setbacks of 15 feet from the property line. Subsection B above requires front setbacks of 15 feet from the curb or street edge.

FIGURE 17.24-1: FRONT AND STREET SIDE SETBACKS IN THE C-R AND C-C ZONING DISTRICTS

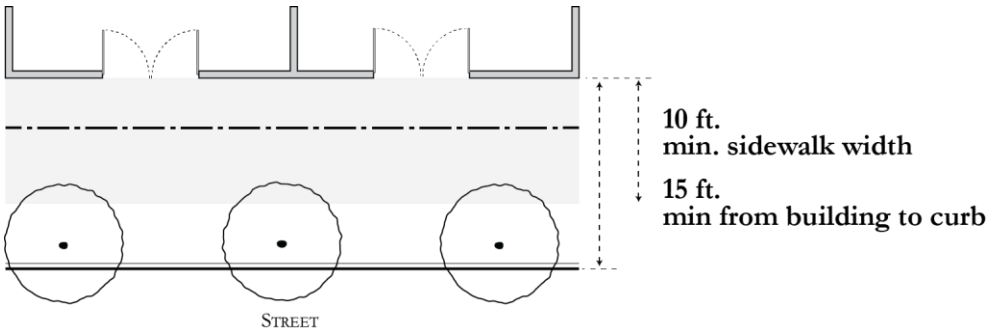

C. Increased Floor Area and Height in C-C and C-R Zoning Districts.

Note: Section 17.27.080 in the existing Zoning Code allows the City Council to approve height exceptions with no specified limit. This section establishes increased floor area and height allowances consistent with General Plan policies and adds an upper limit for height exceptions.

1. **General.** The City Council may approve exceptions to height and floor area ratio (FAR) limits shown in Table 17.24-2 for proposed projects in the C-C and C-R zoning districts. These exceptions are intended to facilitate the redevelopment of underutilized properties along 41st Avenue consistent with the vision for the corridor described in the General Plan.
2. **Increased FAR**. The City Council may allow an increased FAR up to a maximum of 2.0 for proposed development projects in the C-C and C-R zoning districts. To be eligible for an increased FAR, properties must front 41st Avenue or the 41st Avenue/Capitola Road intersection or be part of the Capitola Mall site. Structures on parcels fronting the east side of 41st Avenue that apply for the increased FAR must be set back a minimum of 100 feet from a property line abutting a residential property.
3. **Increased Height.** The City Council may allow an exception to the 40-foot height limit in the C-R and C-C zoning districts up to maximum of 50 feet.
4. **Community Benefit Required**. To be eligible for increased FAR or height in the C-C and C-R zoning districts, a project must provide a substantial community benefit consistent with Chapter 17.88 (Incentives for Community Benefits).

5. **Planning Commission Recommendation**. At a noticed public hearing the Planning Commission shall provide a recommendation to the City Council on any request for increased FAR or height in the C-C and C-R zoning districts.

6. **Basis for Approval**. To approve increased FAR or a height exception in the C-C and C-R zoning districts, the City Council must make all findings specified in Section 17.88.080 (Findings) in Chapter 17.88 (Incentives for Community Benefits). The City Council may approve increased FAR or a height exception only for projects that provide a substantial community benefit, enhance the economic vitality of the 41st Avenue corridor, and minimize adverse impacts to neighboring properties as required by General Plan Action LU-9.3.

D. Residential Transition Standards. Where a commercial or industrial zoning district abuts a residential zoning district, the following standards apply.

Note: Daylight plane requirement in paragraph 2 below is new.

1. **Setbacks.** The minimum setback from the residential property line shall be 15 feet for interior side yards and 20 feet for rear yards.

2. **Daylight Plane.** No structure shall extend above or beyond a daylight plane having a height of 20 feet at the setback from the residential property line and extending into the parcel at an angle of 45 degrees. See Figure 17.24-2.

3. **Landscaping**. A landscaped planting area, extending a minimum of 10 feet from the property line, shall be provided along all residential property lines. A tree screen shall be planted in this area with trees planted at a minimum interval of 15 feet.

FIGURE 17.24-2: RESIDENTIAL TRANSITIONS – DAYLIGHT PLANE

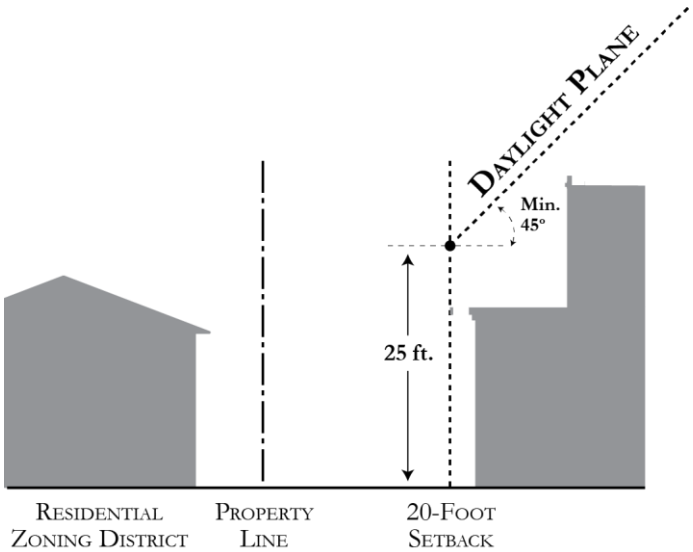

4. **Loading**. Loading and unloading shall be designed to have the least amount of impact on neighboring residential uses. When feasible, loading and unloading provided from the commercial frontage rather than from areas adjacent residential uses.

Attachment: Draft Zoning Code Public Review 02.04.2016 (1392 : Zoning Code Update)

Chapter 17.28 - VISITOR SERVING ZONING DISTRICTS

Sections:

17.28.010 Purpose of the Visitor Serving Zoning Districts
17.28.020 Dual Zoning
17.28.030 Land Use Regulations
17.28.040 Development Standards

17.28.010 Purpose of the Visitor Serving Zoning Districts

A. General. The purpose of the Visitor Serving (VS) zoning district is to provide the visiting public with a range of opportunities to enjoy Capitola's coastal location. These VS zoning district accommodate a range of visitor serving uses including overnight accommodations, dining establishments, and recreational facilities. The VS zoning district implements policies to maintain and enhance visitor serving uses in Capitola consistent with the General Plan and Local Coastal Program (LCP).

B. Subzones. The VS zoning district is divided into five subzones (see Figure 17.128-1) with unique land use and development standards:

1. **Visitor Serving - Rispin (VS-R).** Applies to the Rispin site (APN 035-371-01 & 02).
2. **Visitor Serving - Shadowbrook (VS-SB).** Applies to the Shadowbrook site (APN035-111-04).
3. **Visitor Serving - Monarch Cove Inn (VS-MC).** Applies to the Monarch Cove Inn site (APN 036-143-31 & 036-142-27) and the portion of parcel 036-142-28 that is located between the two Monarch Cove Inn parcels.
4. **Visitor Serving - El Salto (VS-ES).** Applies to the El Salto site (APN 036-143-35).
5. **Visitor Serving - General.** Applies to all other parcels zoned Visitor Serving in Capitola.

17.28.020 Dual Zoning

The VS zoning districts may be the only zoning districts applicable to a property, but at times it is applied along with other zoning districts to a property, such as "VS/R-1" or "VS/P/OS" dual zoning. Dual zoning means that the uses and development standards of the VS zoning district apply, although uses allowed by another district may also be permitted through approval of a Conditional Use Permit. The Planning Commission may apply development standards from the other zoning district in lieu of or as well as the VS district.

Attachment: Draft Zoning Code Public Review 02.04.2016 (1392 : Zoning Code Update)

FIGURE 17.28-1: VISITOR-SERVING DISTRICTS

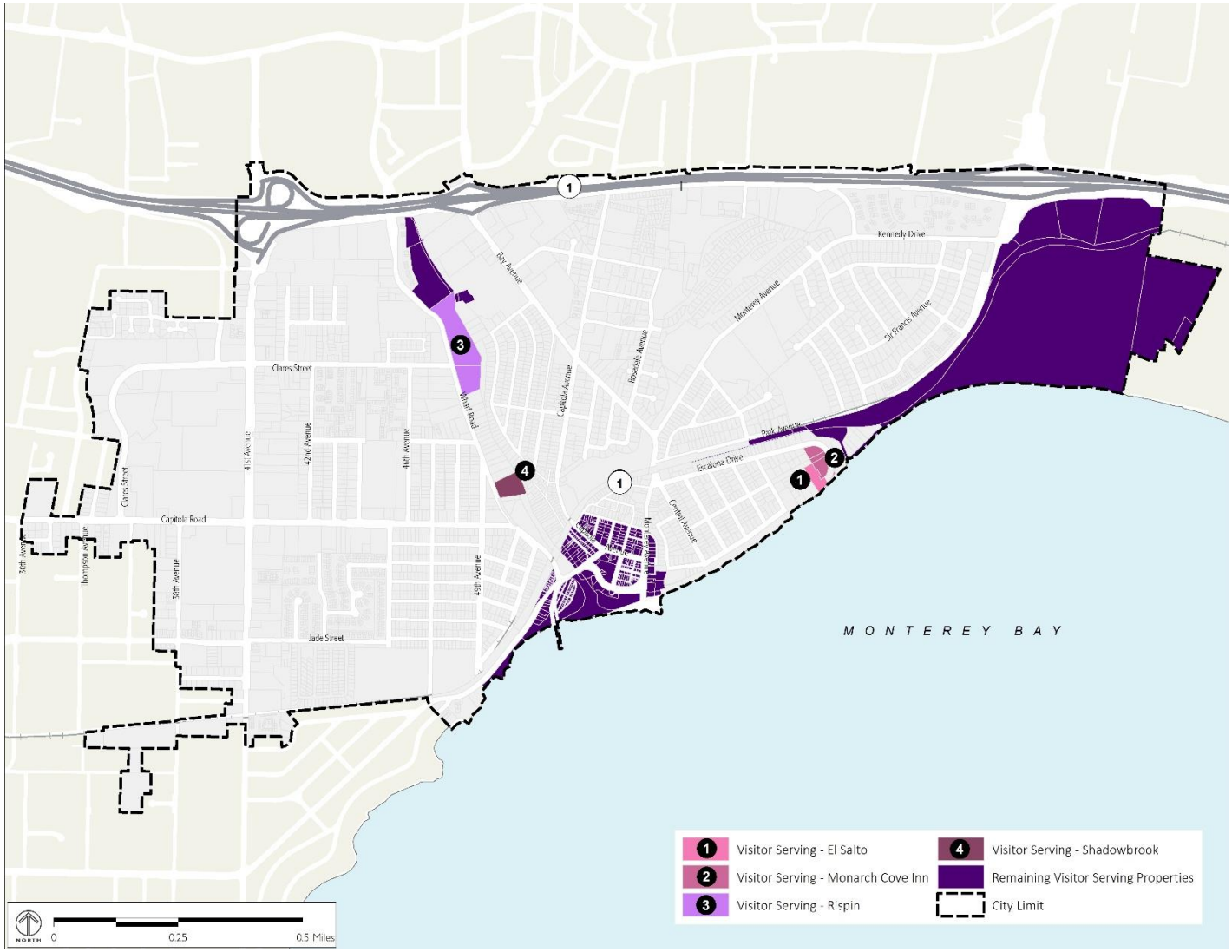

Attachment: Draft Zoning Code Public Review 02.04.2016 (1392 : Zoning Code Update)

17.28.030 Land Use Regulations

A. Permitted Land Uses. Table 17.28-1 identifies land uses permitted in the VS zoning district.

> **Note:** Permitted land uses on the Monarch Cove property have been revised to prohibit festivals, live entertainment, and commercial places of amusement or recreation, and to allow multi-family uses with a Conditional Use Permit.

TABLE 17.28-1: PERMITTED LAND USES IN THE VISITOR SERVING ZONING DISTRICTS

Key **P** Permitted Use **M** Minor Use Permit required **C** Conditional Use Permit required **–** Use not allowed	**VS Subzones**					**Additional Regulations**
	VS-G	**VS-R**	**VS-SB**	**VS-MC**	**VS-ES**	
Residential Uses						
Employee Housing	C [1]	-	-	-	-	
Multi-Family Dwellings	C [2]	-	-	C [2]	C [2]	
One Caretaker Unit for On-Site Security	C	C	C	C	C	
Single-Family Dwellings	C [3]	-	-	C [3]	C [3]	
Public and Quasi-Public Uses						
Community Assembly	C	-	-	-	-	
Day Care Centers	C	-	-	-	-	
Habitat Restoration and Habitat Interpretive facilities	C	C	C	C	-	
Parks and Recreational Facilities	C	C	-	-	-	
Public Parking Lots	C	C	-	-	-	
Public Paths	C	C	C	C	C	
Public Safety Facilities	C	-	-	-	-	
Public Wharfs	C	-	-	-	-	
Schools, Public or Private	C	-	-	-	-	
Commercial Uses						
Business Establishments that Provide Commercial Places of Amusement or Recreation, Live Entertainment, or Service of Alcoholic Beverage	C [4]	C [4]	C [4]	-	-	
Business Establishments that Sell or Dispense Alcoholic Beverages for On-Site Consumption	C	C	C	C	-	
Restaurants						
Full Service	C [5]	C [5]	C [5]	-	-	
Lodging						
Hotels, Inns, Bed and Breakfast, and Hostels	C	C	-	C	C	
Campgrounds [6]	C	-	-	-	-	

Attachment: Draft Zoning Code Public Review 02.04.2016 (1392 : Zoning Code Update)

Key **P** Permitted Use **M** Minor Use Permit required **C** Conditional Use Permit required **–** Use not allowed	VS Subzones					Additional Regulations
	VS-G	**VS-G**	**VS-G**	**VS-G**	**VS-G**	
Recreational Vehicle Parks	C	-	-	-	-	
Transportation, Communication, and Utility Uses						
Utilities, Major	C	C	C	C	C	
Utilities, Minor	P	P	P	P	P	
Wireless Communications Facilities	See Chapter 17.104					
Other Uses						
Access Roadways	C	C	C	C	C	
Accessory Structures and Uses, New	C [7]	C	C	C	C	
Accessory Structures and Uses Established Prior to Primary Use or Structure	C	C	-	C	-	
Change of Visitor Serving Commercial Uses within a Structure	C [8]	-	-	-	-	
Food Service Accessory to a Lodging Use [9]	C	C	-	C	C	
Home Occupations	C	-	-	-	-	Section 17.96.030
Expansion of a Legal Nonconforming Use within an Existing Structure	C	-	-	-	-	
Legal Nonconforming Use Changed to a Use of a Similar or More Restricted Nature	C	-	-	-	-	
Live Entertainment	C	C	C	-	-	
Offices Accessory to Visitor Serving Use	C	C	C	C	-	
Parking Areas to Serve the Primary Use	C	C	C	C	C	
Retail Accessory to a Visitor Serving Use	C	C	-	C	-	
Temporary Assemblages of People, such as Festivals, Fairs, and Community Events	C [10]	C [10]	C [10]	C [11]	-	
Weddings	C	C	C	C	-	

Notes:
[1] Permitted only as an accessory use.
[2] Multi-family dwellings shall comply with development standards in the Multi-Family Residential, Medium Density (RM-M) zoning district.
[3] Single-family dwellings shall comply with development standards in the Single-Family Residential (R-1) zoning district.
[4] May not be located within 200 feet of the boundary of a residential zoning district.
[5] Drive up and car service is not allowed.
[6] May include moderate intensity recreational uses, including tent platforms, cabins, parks, stables, bicycle paths, restrooms, and interpretive facilities.
[7] Intensification of the primary use is not allowed.
[8] The new use may not change the nature or intensity of the commercial use of the structure.
[9] Permitted only to serve guests of the lodging use.
[10] Events may not exceed 10 days and may not involve construction of permanent facilities.
[11] Limited to a single one-day event per year.

Attachment: Draft Zoning Code Public Review 02.04.2016 (1392 : Zoning Code Update)

B. Additional Visitor Serving Uses. In the VS-G, VS-MC, and VS-SB zoning districts, the Planning Commission may allow other visitor serving uses of a similar character, density, and intensity as those listed in Table 17.28-1 if the Planning Commission finds the other uses to be consistent and compatible with the intent of this chapter, the General Plan, and the Local Coastal Program.

17.28.040 Development Standards

A. General. Table 17.28-2 identifies development standards that apply in the VS zoning districts.

TABLE 17.28-2: DEVELOPMENT STANDARDS IN THE VISITOR SERVING ZONING DISTRICTS

	VS Zoning Districts	Additional Standards
Parcel Area, Minimum	5,000 sq. ft	
Impervious Surface, Maximum	VS-R: 25% VS-SB, VS-MC & VS-ES: 50% [1] VS-G: No maximum	
Floor Area Ratio, Maximum	0.25	
Setbacks, Minimum	See Section 17.28.040.B	
Height, Maximum	30 ft.	17.28.040.C

Notes:
[1] In the VS-SB zoning district, the impervious surface requirement applies to the parcel located directly adjacent to Soquel Creek. In the VS-ES zoning district, the impervious surface calculation excludes the portion of parcel 036-142-28 located outside of the Monarch Cove Inn.

B. Setbacks. The following setback requirements apply in the VS zoning districts.

1. The Planning Commission may require front, side and rear setbacks through the Design Review process to provide adequate light and air, ensure sufficient distance between adjoining uses to minimize any incompatibility, and to promote excellence of development. Where a side or rear yard abuts residential property, a setback of at least 10 feet shall be provided.
2. Front and exterior side yards shall not be used for required parking facilities.
3. For the visitor-serving El Salto parcels located adjacent to the bluff top, new development shall adhere to the setback and development provision provided in the LCP natural hazards policies and in Chapter 17.68 (Geologic Hazards).
4. To protect the waters and riparian habitat of Soquel Creek, new development on the Shadowbrook Restaurant and Rispin parcels shall adhere to the LCP natural systems policies and Chapter 17.64 (Environmentally Sensitive Habitat Areas).

C. Height Exceptions. With a recommendation from the Planning Commission, the City Council may approve additional height up to a maximum of 36 feet in the VS zoning districts when the following findings can be made:

1. The proposed development and design is compatible with existing land uses in surrounding areas and the General Plan.
2. Streets and thoroughfares are suitable and adequate to serve the proposed development.
3. The proposed development does not produce shadows which may adversely affect the enjoyment of adjacent streets, buildings, or open space.
4. Major public views are not blocked by the proposed development.

D. Landscaping. See Table 17.72-2 in Chapter 17.72 (Landscaping).

E. Lighting. In addition to outdoor lighting standards in Section 17.96.100, (Outdoor Lighting), the following lighting requirements apply in the VS zoning district:

1. All exterior lighting shall be unobtrusive, harmonious with the local area and constructed or located so that only the area intended is illuminated and off-site glare is fully controlled.
2. The location, type and wattage of exterior lighting must be approved by the Community Development Director prior to the issuance of building permits or the establishment of the use.

Attachment: Draft Zoning Code Public Review 02.04.2016 (1392 : Zoning Code Update)

Chapter 17.32 – SPECIAL PURPOSE ZONING DISTRICTS

Sections:

17.32.010 Purpose of the Special Purpose Zoning Districts
17.32.020 Land Use Regulations
17.32.030 Development Standards

17.32.010 Purpose of the Special Purpose Zoning Districts

A. Community Facility (CF). The CF zoning district provides areas for public and community facilities serving Capitola residents and visitors. Land uses permitted in the CF zoning district include public uses such as governmental offices, police and fire stations, community centers, schools, libraries, and other similar uses. The CF zoning district implements the Public/Quasi-Public land use designation in the General Plan.

B. Parks and Open Space (P/OS). The P/OS zoning district provides parks, recreational facilities, and open space for the use and enjoyment of the community. The P/OS zoning district also protects and preserves environmentally sensitive natural areas and habitat in Capitola. The P/OS zoning district implements the Parks and Open Space land use designation in the General Plan.

17.32.020 Land Use Regulations

A. Permitted Uses. Table 17.32-1 identifies land uses permitted in the CF and P/OS zoning districts.

B. Commercial Uses in the P/OS Zoning Districts. Commercial uses that are accessory to a permitted use in in the P/OS zoning district are permitted with a Conditional Use Permit.

C. Visitor Accommodations in New Brighten State Beach. Visitor accommodations and campground uses are permitted in the New Brighten State beach at a maximum intensity of three units per gross lot area.

D. P/OS Standards. The following standards apply to uses in the P/OS zoning district.

1. Any structure, land use, or removal of vegetation or natural materials that in the opinion of the Planning Commission is inconsistent with the purpose of the P/OS zoning district is prohibited.
2. Development shall be subordinate to its recreational, scenic, or natural resource purpose consistent with the Local Coastal Program (LCP). Natural resource protection shall include protection of arroyos, creeks and riparian corridors, woodlands and other environmentally sensitive habitat.
3. No new permanent structures are permitted on the open, sandy beach area of Capitola except for facilities required for public health and safety (e.g., lifeguard stands, approved beach erosion control structures).

Attachment: Draft Zoning Code Public Review 02.04.2016 (1392 : Zoning Code Update)

TABLE 17.32-1: PERMITTED LAND USES IN THE CF AND P/OS ZONING DISTRICTS

Key **P** Permitted Use **A** Administrative Permit required **M** Minor Use Permit required **C** Conditional Use Permit required **–** Use not allowed	**Zoning District**		
	CF	**P/OS**	**Additional Regulations**
Public and Quasi-Public Uses			
Colleges and Trade Schools	C	-	
Community Assembly	P [1]	-	
Cultural Institutions	P [1]	-	
Day Care Centers	P [1]	-	
Government Offices	P	-	
Parks and Recreational Facilities	P [1]	P [1]	
Public Safety Facilities	P	-	
Schools, Public or Private	P	-	
Transportation, Communication, and Utilities Uses			
Recycling Collection Facilities	C	-	17.96.130
Utilities, Major	C	C	
Utilities, Minor	P	P	
Wireless Telecommunications Facilities	See Chapter 17.104		
Other Uses			
Accessory Uses and Structures	See Chapter 17.52		
Temporary Uses and Structures	See Section 17.96.170		
Urban Agriculture			
Community Gardens	M [1]	M [1]	
Urban Farms	C [1]	C [1]	

Notes:
[1] Publicly owned and/or operated facilities only.

E. Public Parking in the Coastal Zone.

1. Public parking existing as of [date of Zoning Ordinance adoption] in the following locations in the CF zoning district shall be maintained for public parking:

   a. The Upper City Hall parking lot;

   b. The Cliff Drive overlook parking; and

Attachment: Draft Zoning Code Public Review 02.04.2016 (1392 : Zoning Code Update)

c. The Cliff Drive Southern Pacific railroad right-of-way parking unless Cliff Drive must be relocated due to cliff erosion.

2. Substantial changes in public parking facilities in the coastal zone require a Local Coastal Program (LCP) amendment.

17.32.030 Development Standards

A. Floor Area Ratio. The maximum permitted floor area ratio (FAR) is 0.25 in the P/OS zoning district and as determined by the Planning Commission through the Design Review process in the P/OS zoning district.

B. Other Development Standards. Other development standards (e.g., setbacks, height, building coverage) in the CF and P/OS zoning districts shall be determined by the Planning Commission through the Design Review process.

Attachment: Draft Zoning Code Public Review 02.04.2016 (1392 : Zoning Code Update)

Chapter 17.36 – PLANNED DEVELOPMENT ZONING DISTRICT

Sections:

17.36.010 Purpose of the Planned Development Zoning District
17.36.020 Where Allowed
17.36.030 Permitted Land Uses
17.36.040 Development Standards
17.36.050 Required Approvals
17.36.060 Preliminary Development Plans
17.36.070 Planned Development Rezoning
17.36.080 Final Development Plans

17.36.010 Purpose of the Planned Development Zoning District

The purpose of the Planned Development (PD) zoning district is to allow for high quality development that deviates from standards and regulations applicable to the other zoning districts in Capitola. The PD zoning district is intended to promote creativity in building design, flexibility in permitted land uses, and innovation in development concepts. The PD zoning district provides land owners with enhanced flexibility to take advantage of unique site characteristics and develop projects that will provide public benefits for residents, employees, and visitors. Development within each PD zoning district is regulated by a Preliminary and Final Development Plan approved by the City Council.

17.36.020 Where Allowed

Note: This section prohibits PD zoning on properties designated for single-family residential use. Section 17.39.020 in the existing Zoning Code allows PD zoning for all uses. The existing minimum parcel size for PD zoning also has been removed.

The PD zoning district may be applied to any property in Capitola except for those designated as Single-Family Residential on the Zoning Map and General Plan Land Use Map.

17.36.030 Permitted Land Uses

Permitted land uses in each PD zoning district shall conform to the applicable General Plan land use designation and to the Final Development Plan that applies to the property.

17.36.040 Development Standards

A. **Established in Final Development Plan.** Development standards (e.g., height, setbacks, building coverage) for each PD zoning district shall be established in the applicable Final Development Plan.

Attachment: Draft Zoning Code Public Review 02.04.2016 (1392 : Zoning Code Update)

B. Maximum Intensity. The maximum permitted floor area ratio and residential density shall not exceed maximums established in the General Plan for the applicable land use designation.

C. Public Improvements. Public infrastructure and improvements in the PD zoning district shall conform to the City's standard specifications as maintained by the City Engineer.

17.36.050 Required Approvals

A. Development Plans and Zoning Map Amendments. Establishment of a PD zoning district requires approval of a Preliminary Development Plan followed by concurrent approval of a Zoning Map amendment and a Final Development Plan.

B. Design Review. A proposed development must receive a Design Permit as required by Chapter 17.120 (Design Permits). All development and land uses within a PD zoning district shall be consistent with the approved Final Development Plan.

17.36.060 Preliminary Development Plans

Note: This section requires City Council approval of a Preliminary Development Plan. The existing Zoning Code requires only Planning Commission approval of a Preliminary Development Plan.

A. Review Authority. The City Council takes action on Preliminary Development Plan applications following recommendation from the Planning Commission.

B. Application Submittal and Review.

1. Preliminary Development Plan applications shall be filed and reviewed in compliance with Chapter 17.112 (Permit Application and Review). The application shall include the information and materials required by the Community Development Department and the information required by Paragraph C (Application Materials) below.
2. If the property is not under a single ownership, all owners must join the application, and a map showing the extent of ownership shall be submitted with the application.
3. It is the responsibility of the applicant to provide evidence in support of the findings required by Paragraph F (Findings) below.

C. Application Materials. Preliminary Development Plan applications shall include the following information and materials:

1. **Project Description.** A written description of the project proposed within the PD zoning district. The project description shall include a narrative statement of the project objectives and a statement of how the proposed project will comply with General Plan goals and policies for the applicable land use designation. An overview of the proposed land use, densities, open space, and parking should be included in the project description.
2. **Community Benefits.** A description of how the proposed development is superior to development that could occur under the standards applicable in other zoning districts, and

Attachment: Draft Zoning Code Public Review 02.04.2016 (1392 : Zoning Code Update)

how it will achieve superior community design, environmental preservation, and/or substantial public benefits as defined in Paragraph G below.

3. **Site Map.** Maps depicting the existing topography, on-site structures and natural features, mature trees, and other significant vegetation and drainage patterns. The map shall show the proposed PD zoning district boundaries and all properties within 500 feet of the site boundary.

4. **Concept Plan.** An overall diagram of the project concept. This diagram shall illustrate the overall development concept, including proposed land uses, buildings, circulation, open space, and any other significant elements in the proposed project. Phases shall be clearly indicated if multiple phases are proposed.

5. **Infrastructure.** A written description of the infrastructure necessary to serve each phase of the project proposed.

D. Planning Commission Review and Recommendation.

1. The Planning Commission shall hold a public hearing on the Preliminary Development Plan application as required by Chapter 17.148 (Public Notice and Hearings).

2. The Planning Commission shall recommend to the City Council the approval, approval with modification, or denial of the Preliminary Development Plan application. The recommendation shall be based on the findings in Paragraph F (Findings) below.

E. City Council Review and Decision. Upon receipt of the Planning Commission's recommendation, the City Council shall conduct a public hearing and either approve, approve with modification, or deny the Preliminary Development Plan.

F. Findings. The City Council may approve an application for a Preliminary Development Plan only if all of the following findings can be made:

1. The proposed development is consistent with the General Plan, Local Coastal Program (if applicable), and any applicable specific plan or area plan adopted by the City Council.

2. The proposed development is superior to the development that could occur under the standards applicable in the other zoning districts.

3. The proposed project will provide a substantial public benefits as defined in Paragraph G (Substantial Public Benefit Defined) below.

4. The site for the proposed development is adequate in size and shape to accommodate proposed land uses.

5. Adequate transportation facilities, infrastructure, and public services exist or will be provided to serve the proposed development.

6. The proposed development will not have a substantial adverse effect on surrounding property and will be compatible with the existing and planned land use character of the surrounding area.

Attachment: Draft Zoning Code Public Review 02.04.2016 (1392 : Zoning Code Update)

Note: The requirement that a PD project provide a substantial public benefit in Finding 3 above and described in subsection G below is new.

G. Substantial Public Benefit Defined. When used in this chapter, "substantial public benefit" means a project feature not otherwise required by the Zoning Code or any other provision of local, State, or federal law that significantly advances goals of the General Plan. Examples of substantial public benefits include but are not limited to:

1. Affordable housing that meets the income restrictions applicable in the Affordable Housing (-AH) overlay zone.
2. Public plazas, courtyards, and other public gathering places that provide opportunities for people to informally meet and gather.
3. Improved walkways and paths for bicycles and pedestrians within properties, enhanced connections for bicyclists and pedestrians between properties.
4. Green building and sustainable development features that substantially exceed the City's minimum requirements.
5. Preservation, restoration, or rehabilitation of a historic resource.
6. Increased ability to for residents and visitors to walk, bike, and take transit to destinations and reduce greenhouse gas emissions.
7. Publicly available parking to serve the Village.
8. Publicly accessible parks and open space beyond the minimum required by the City or other public agency.
9. Habitat restoration and or protection of natural resources beyond the minimum required by the City or other public agency.

H. Conditions of Approval. The City Council may attach conditions of approval to a Preliminary Development Plan to achieve consistency with the General Plan, Local Coastal Program, Zoning Code, and any applicable specific plan or area plan adopted by the City Council.

I. Extent of Approval. Approval of the Preliminary Development Plan shall be limited to general acceptability of the land uses proposed and their interrelationship, and shall not be construed to endorse or dictate the precise location of uses, configuration of parcels, or engineering feasibility.

J. Expiration of Approval.

1. A Preliminary Development Plan shall expire and become void unless a Final Development Plan application is submitted within one year of Preliminary Development Plan approval.
2. The Community Development Director may approve a one-year extension to the Preliminary Development Plan if the Director determines that the applicant has proceeded in good faith and has exercised due diligence in efforts to submit the Final Development Plan in a timely manner.

Attachment: Draft Zoning Code Public Review 02.04.2016 (1392 : Zoning Code Update)

3. The applicant shall submit to the Community Development Department a written request for an extension of time no later than ten days before the expiration of the Preliminary Development Plan.

17.36.070 Planned Development Rezoning

A. General Procedures and Requirements. Establishing a PD zoning district requires City Council approval of a Zoning Map amendment consistent with Chapter 17.144 (Zoning Code Amendments). All procedures and requirements for Zoning Map Amendments in Chapter 17.144 apply to the establishment of a PD zoning district.

B. Timing. The City Council shall act on the Zoning Map Amendment concurrently with the Final Development Plan. A PD zoning district may be established only with concurrent approval of a Final Development Plan.

C. Reference to Final Development Plan. The ordinance adopted by the City Council establishing a PD zoning district shall reference the Final Development Plan approved concurrently with the Zoning Map Amendment.

17.36.080 Final Development Plans

A. Review Authority. The City Council takes action on Final Development Plan applications following recommendation from the Planning Commission.

B. Timing. A Final Development Plan application may be submitted only after City Council approval of a Preliminary Development Plan.

C. Application Submittal and Review. Final Development Plan applications shall be filed and reviewed in compliance with Chapter 17.112 (Permit Application and Review). The application shall include the information and materials required by the Community Development Department and the information required by Paragraph D (Application Materials) below.

D. Application Materials. Applications for approval of a Final Development Plan shall include the following information and materials:

1. **Land Use.** A map showing the location of each land use proposed within the site, including open space and common areas. The land use map shall be accompanied by a narrative description of permitted land uses, allowable accessory uses, and uses allowed by-right or with a Conditional Use Permit.

2. **Subdivision Map.** If the project involves the subdivision of land, a tentative parcel map or tentative map required by Title 16 (Subdivisions) of the Capitola Municipal Code.

3. **Circulation.** A map and descriptions of the major circulation features within the site including vehicular, bicycle, pedestrian facilities; traffic flow of internal traffic; and existing and proposed public streets and sidewalk improvements.

4. **Public Facilities and Open Space.** The amount (in square feet or acres) and percentage of site area that will be dedicated for all types of open space, including proposed

Attachment: Draft Zoning Code Public Review 02.04.2016 (1392 : Zoning Code Update)

recreational facilities and amenities; and any public facilities, including public utility easements, public buildings and public land uses.

5. **Development Standards.** All development standards that apply within the project, including:

   a. Land use;

   b. Circulation of traffic;

   c. Landscaping;

   d. Architecture;

   e. Density and/or intensity;

   f. Minimum building site;

   g. Minimum lot dimensions;

   h. Maximum building coverage;

   i. Minimum setbacks;

   j. Maximum building or structure heights;

   k. Maximum height of fences and walls;

   l. Signs;

   m. Off-street parking; and

   n. Other items as deemed appropriate by the Planning Commission and City Council.

E. Planning Commission Review and Recommendation.

1. The Planning Commission shall hold a public hearing on the Final Development Plan application as required by Chapter 17.148 (Public Notice and Hearings).

2. The Planning Commission shall recommend to the City Council the approval, approval with modification, or denial of the Final Development Plan application. The recommendation shall be based on the findings in Paragraph G (Findings) below.

F. City Council Review and Decision. Upon receipt of the Planning Commission's recommendation, the City Council shall conduct a public hearing and either approve, approve in modified form, or deny the Final Development Plan. The City Council may approve the application only if all of the findings in Paragraph G (Findings) below can be made.

G. Findings. The City Council may approve an application for a Final Development Plan if all of the following findings can be made:

1. The Final Development Plan is consistent with the spirit and intent of the Preliminary Development Plan.

2. Findings made to approve the Preliminary Development Plan remain valid for the Final Development Plan, including that the project will provide a substantial community benefit

Attachment: Draft Zoning Code Public Review 02.04.2016 (1392 : Zoning Code Update)

as defined in Section 17.36.060.G (Substantial Public Benefit Defined).

3. Findings required for the concurrent approval of a Zoning Map Amendment can be made.

H. Conditions of Approval.

1. The City Council may attach conditions of approval to a Final Development Plan to achieve consistency with the General Plan, Local Coastal Program, Zoning Code, and any applicable specific plan or area plan adopted by the City Council.

2. The City Council shall condition approval of the Final Development Plan on the completion of public improvements and grants of easement shown on the Final Development Plan.

I. Post-Decision Procedures. Post-decision procedures and requirements in Chapter 17.156 (Post-Decision Procedures) shall apply to Final Development Plans.

Note: Effect of Development Plan in subsection J below is new.

J. Effect of Development Plan. All future development and land uses within a PD zoning district shall comply with the approved Final Development Plan.

1. **Land Uses.** New land uses may be added in a PD zoning district provided the Final Development Plan identifies the use as a permitted or conditionally permitted land use. Establishing a land use not specifically permitted by the Final Development Plan would require an amendment to the PD zoning district.

2. **Structures**. New structures may be added in a PD zoning district provided the structures comply with development standards established in the Final Development Plan (e.g., height, setback, floor area ratio). Design Review consistent with Chapter 17.120 (Design Permits) is required for all new development that was not approved with the Final Development Plan. Development that exceeds development standards in the Final Development Plan is allowed only with an amendment to the PD zoning district.

Chapter 17.40 - RESIDENTIAL OVERLAY ZONES

Sections:

17.40.010 Purpose
17.40.020 Affordable Housing (-AH) Overlay Zone
17.40.030 Vacation Rental Use (-VRU) Overlay Zone
17.40.040 Village Residential (-VR) Overlay Zone

17.40.010 Purpose

This chapter contains requirements for overlay zones that primarily apply to residential uses and residential areas. Overlay zones establish additional standards and regulations to specific areas, in addition to the requirements of the underlying base zoning district.

17.40.020 Affordable Housing (-AH) Overlay Zone

A. Purpose. The purpose of the Affordable Housing (-AH) overlay zone is to facilitate the provision of affordable housing units through the retention and rehabilitation of existing affordable units, or the construction of new affordable units. The -AH overlay zone is intended to:

1. Implement the goals and policies of the General Plan Housing Element and provide the opportunity and means for Capitola to meet its regional fair share allotment of affordable units.
2. Encourage the development of affordable units by assisting both the public and private sector in making the provision of these units economically viable.
3. Provide assurances to the City that these units will maintain a high degree of quality and will remain affordable to the target population over a reasonable duration of time.
4. Encourage the provision of affordable housing through the combination of the -AH overlay with the multi-family residential zone where the affordable housing projects are determined to be feasible and are consistent with the General Plan.
5. Provide a means of directing and simplifying the process for creating and maintaining affordable housing.
6. Provide incentives to developers, whether in new or rehabilitated housing, to maintain rental units for the long term (e.g., not less than 55 years) and affordable ownership units in perpetuity.

B. Applicability. The -AH overlay zone may be applied to parcels that are one acre or more in size and located in a multi-family residential zoning district.

C. Definitions.

Attachment: Draft Zoning Code Public Review 02.04.2016 (1392 : Zoning Code Update)

1. "Affordable housing" means housing capable of being purchased or rented by a household with "very low," "low," or "moderate" income levels at an "affordable housing cost" or "affordable rent," as those terms are defined by the State of California.

2. "Affordable housing overlay district" means a zoning district that applies in addition to existing zoning designation where the city encourages the provision of affordable housing units as described in this chapter.

3. The "very low," "low," and "moderate" income levels are defined by the state of California in Sections 50105, 50079.5, and 50093, respectively, of the California Health and Safety Code, and in Subchapter 2 of Chapter 6.5 of Division 1 of Title 25 of the California Code of Regulations, commencing with Section 6900. These income levels are:

   a. Very Low Income. Up to and including fifty percent of the Santa Cruz County median income, adjusted for family size, as defined by the state law;

   b. Lower Income. Fifty-one percent to eighty percent of Santa Cruz County median income, adjusted for family size, as defined by the state law;

   c. Moderate Income. Eighty-one percent to one hundred twenty percent of Santa Cruz County median income, adjusted for family size, as defined by state law.

4. "Affordable housing cost" and "affordable rent" are defined in Sections 50052.5 and 50053, respectively, of the California Health and Safety Code, and in Subchapter 2 of Chapter 6.5 of Division 1 of Title 25 of the California Code of Regulations, commencing with Section 6900.

D. Relationship with State Density Bonus Law and Other State Laws.

1. All of the State laws and regulations referenced above, or their successors in defined terms when amended, shall be incorporated herein as though fully set forth. In the event of any inconsistency or discrepancy between the income and affordability levels set forth in this chapter and the levels set in State laws and regulations, the State provisions shall control.

2. The -AH overlay zone provides a density increase for affordable housing development that in most cases exceeds density bonuses permitted by state law (Government Code Section 65915).

3. A development may utilize the -AH overlay zone as an alternative to the use of state density bonus but may not utilize both the overlay and state density bonuses.

E. Permits and Approvals Required.

1. Affordable housing developments proposed under this chapter require the execution of a Development Agreement by the City and the developer. The Development Agreement shall be prepared in accordance with the provisions of California Government Code Section 65864 et seq.

Attachment: Draft Zoning Code Public Review 02.04.2016 (1392 : Zoning Code Update)

2. Affordable housing developments proposed under this chapter require approval of a Design Permit. All requirements in Chapter 17.120 (Design Permits) apply, except that the Planning Commission recommends Design Permit approval or denial to the City Council. The City Council may take action on the Design Permit application concurrently with or subsequent to action on the Development Agreement.

F. Permitted Residential Density.

1. Affordable housing developments with up to 20 units per acre are permitted in the -AH overlay zone. The 20 units per acre limit is based on a calculation that includes all existing and new units on the property.
2. Density permitted by in the -AH overlay zone may not exceed what can be accommodated by the site while meeting applicable parking, unit size, and other development standards.

G. Income Restrictions.

1. A minimum of 50 percent of the units in an affordable housing development shall be income restricted affordable housing. All affordable units may be in a single category or part of a mixture of affordable unit types which include:
   a. Moderate-income households;
   b. Lower-income households;
   c. Very low-income households; or
   d. Extremely low-income households.
2. At minimum 50 percent of income-restricted affordable units (25 percent of the total project units) shall be affordable to low-, very low-, and extremely-low income households. A greater level of affordability will not allow a greater level of density.

H. Development Incentives.

1. **Purpose.**
   a. In order to reduce costs associated with the development and construction of affordable housing, affordable housing developments within the -AH overlay zone shall be eligible for specified development incentives. These incentives allow for the relaxation of development standards normally applied to housing in Capitola and are established in order to facilitate and promote the development of affordable housing in the City.
   b. Incentives shall be targeted to improve the project design or to yield the greatest number of affordable units and required level of affordability, so as to permit the City to meet its regional fair share allotment of affordable housing and the goals of the Housing Element of the General Plan.

2. **Relaxed Development Standards.** The City shall allow the following relaxed development standards for projects that comply with the affordability required specified in Subsection G (Income Restrictions):

   a. **Minimum Building Site Area and Lot Area per Unit.** There shall be no minimum building site area requirement for individual parcels or dwelling sites within the -AH overlay zone. The building site area shall be designated on a site plan as approved by the City through the Design Permit review process.

   b. **Density Averaging.** Project density within the -AH overlay zone may be calculated by averaging the density on a project-wide basis so as to permit higher density levels in certain project portions in exchange for advantageous project design features as determined by the City through the Design Permit review process.

   c. **Setbacks.**
      (1) The minimum setbacks from property lines shall be determined by the City through the Design Permit process.
      (2) Minimum setbacks from property lines adjacent to or across from a single-family residential zone shall be same as underlying zoning district.

> **Note:** Section 17.20.050.C.6 in the existing Zoning Code requires 20-foot first floor and 50-foot second floor minimum setbacks from property lines adjacent to or across from a single-family residential zoning district. Subparagraph c above removes this requirement as it is not a relaxed development standard and would render development infeasible in many locations.

   d. **Lot Coverage.** The City shall determine the maximum lot coverage for the proposed project through the Design Permit process.

   e. **Parking.** Projects shall provide a minimum of:
      (1) Two off-street parking spaces per unit; and
      (2) One off-street visitor parking space for every seven units.

3. **Additional Development Incentives.**

   a. As a further inducement to the development of affordable housing beyond the relaxed development standards described in Section 2 (Relaxed Development Standards) above, the City may choose to extend one or more additional development incentives depending on the quality, size, nature, and scope of the project being proposed.

   b. Additional development incentives may be in the form of waivers or modifications of other standards which would otherwise inhibit density and achievement of affordable housing goals for the development site, including, but not limited to, the placement of public works improvements.

I. Design Standards.

1. **Purpose and Applicability.**

Attachment: Draft Zoning Code Public Review 02.04.2016 (1392 : Zoning Code Update)

a. The following design standards are intended to ensure high-quality development within the -AH overlay zone that enhances the visual qualities of Capitola and respects adjacent homes and neighborhoods.

b. Design standards shall apply to all projects receiving development incentives described in Section H (Development Incentives) or residential densities greater than allowed by the applicable base zone.

2. **Neighborhood Compatibility.**

a. Affordable housing developments shall be designed and developed in a manner compatible with and complementary to existing and potential development in the immediate vicinity of the project site.

b. Site planning on the perimeter shall provide for protection of the property from adverse surrounding influences and shall protect surrounding areas from potentially adverse influences from the property.

c. To the greatest extent possible, the design of the development shall promote privacy for residents and neighbors, security, and use of passive solar heating and cooling through proper placement of walls, windows, and landscaping.

d. Building design and materials shall blend with the neighborhood or existing structures on the site.

3. **Pedestrian Orientation.**

a. The front façade and main entrance of dwellings adjacent to the front property line shall face the street and must be clearly articulated through the use of architectural detailing.

b. The front entrance of the dwelling facing the street should be defined by at least one of the following: a porch of at least 8 feet in width and depth; roof overhang; or similar architectural element.

c. Except for a basement-level garage below grade, any garage, carport or other accessory structure, attached or detached, shall be located at least 15 feet behind the front of the principal building facing the front property line.

d. Sidewalks shall be installed along all street frontages.

e. Existing vegetation on the perimeter shall be preserved to maintain a buffer to existing surrounding structures. Existing significant trees are to remain whenever feasible.

f. The pedestrian orientation standards in subsections (a) through (e) above can be waived by the City through the Design Permit process when the review authority finds it is infeasible to comply due to physical or other constraints on the property.

4. **Building Height.** Maximum building height shall be the same as in the underlying base zoning district.

Attachment: Draft Zoning Code Public Review 02.04.2016 (1392 : Zoning Code Update)

> **Note:** Section 17.20.050.C.5 in the existing Zoning limits height to two stories or 27 feet, which is less than the maximum permitted height in the RM zoning district. Paragraph 4 above allows a maximum height equal to the underlying zoning district to remove an additional barrier to the construction of affordable housing.

5. **Common Open Space.**

   a. Common open space shall comprise the greater of:
      (1) 10 percent of the total area of the site; or
      (2) 75 square feet for each dwelling unit.

   b. Areas occupied by buildings, streets, driveways, parking spaces, utility units, and trash enclosures may not be counted in satisfying the open space requirement.

   c. The following areas may be counted in satisfying the open space requirement:
      (1) Landscaping and areas for passive and active recreation/open space with a minimum depth and width of 5 feet.
      (2) Land occupied by recreational buildings and structures.

6. **Streets.**

   a. All public streets within or abutting the proposed development shall be improved to City specifications for the particular classification of street.

   b. All private streets shall meet fire code and access standards.

7. **Accessory Uses and Structures.** Accessory uses and structures shall be permitted as allowed by Chapter 17.52 (Accessory Structures and Uses) and as required through the Design Permit process.

8. **Signs.** Signs shall be permitted as allowed by Chapter 17.80 (Signs) and as required through the Design Review process.

J. Assurance of Affordability.

1. Affordable housing units developed under this section shall remain available to persons and families of very low, low, and moderate income, at an affordable housing cost or affordable rental cost, at those income and affordability levels as defined in Section 17.40.020.C (Definitions), for a period of 55 years, unless a longer period is required by a construction or mortgage financing program, mortgage insurance program, state law, or housing grant, loan or subsidy program.

2. The required period of affordability shall run concurrently with any period of affordability required by any other agency; provided, however, that the affordability period shall not be less than 55 years, as set forth in this section.

3. The project developer shall be required to enter into an appropriate agreement with the City to ensure affordability is maintained for the required period.

K. Pre-Application Consultation.

Attachment: Draft Zoning Code Public Review 02.04.2016 (1392 : Zoning Code Update)

1. Prior to submitting an application for an affordable housing development within the -AH overlay zone, the applicant or prospective developer should request preliminary consultation meetings with the Community Development Department and other City staff as appropriate, to obtain information and guidance before incurring substantial expense in the preparation of plans, surveys and other data.

2. Preliminary consultations with City staff should address potential local, state, and federal affordable housing funding availability, and program requirements in guaranteeing project consistency with the objectives and requirements of the -AH overlay zone.

L. Additional Application Requirements. An application for an affordable housing development within the -AH overlay zone shall be filed and reviewed in compliance with Chapter 17.112 (Permit Application and Review) and shall also include the following materials and information:

1. Breakdown of affordable and market rate units including unit number, unit size, affordable designation of each unit (very low, low, or moderate), and rental rate or sale price.

2. The proposed means for assuring the continuing existence, maintenance and operation of the project as an affordable housing project.

3. Such other information as may be required by the Community Development Department to allow for a complete analysis and appraisal of the proposed project.

M. Findings. To approve or recommend approval of an affordable housing development, the review authority shall make all of the following findings, in addition to the findings required by Chapter 17.120 (Design Permits):

1. The incentives granted for density and deviation from development and design standards, are commensurate with the level of affordability. Specifically, the greater the extent of concessions and incentives, the greater the level of affordability, quality, size, nature, and scope of the project being proposed.

2. The design of the proposed project, even with the concessions for density and deviation from development and design standards, is appropriate for the scale and style of the site and surrounding neighborhood. Specifically, the development will provide an attractive visual transition and will not significantly impact the integrity of the surrounding neighborhoods.

3. The developer has agreed to enter into an agreement to maintain the affordability of the project specific to the requirements of the City and any funding sources with greater or longer affordability requirements.

4. If located within the coastal zone, the project is found to be in conformity with the Local Coastal Program, including, but not limited to, sensitive habitat, public viewshed, public recreational access and open space protections.

Attachment: Draft Zoning Code Public Review 02.04.2016 (1392 : Zoning Code Update)

17.40.030 Vacation Rental Use (-VRU) Overlay Zone

A. Purpose. The -VRU overlay zone identifies locations within residential areas where the short term rental of dwelling units is permitted.

B. Applicability. Locations where the -VRU overlay zone applies is shown on the Zoning Map.

C. Land Use Regulations. Permitted uses in the -VRU overlay zone are the same as in the base zoning district, expect that vacation rental uses are permitted with a Minor Use Permit.

D. Required Permit. Each vacation rental unit is required to obtain a Minor Permit in addition to registering each unit with the City as a business. Vacation rental registration includes obtaining a business license and transient occupancy tax registration.

E. Development and Operations Standards.

1. Upon receiving a business license, the vacation rental unit will be inspected by the building official or designee. The Minor Use Permit may not be approved until the unit is determined to be safe. The Building Official or designee shall establish the maximum number of guests that may occupy the unit.
2. The vacation rental unit must provide minimum required on-site parking, or provide required parking through a Pacific Cove parking permit. The Minor Use Permit holder must designate a person who has authority to control the property and represent the landlord. This responsible person must be available at all reasonable times to receive and act on complaints about the activities of the tenants.
3. Only one on-site sign per unit, not to exceed 1 square foot in size, is permitted to advertise the vacation rental. Each unit must post the Minor Use Permit approval in a visible location within the unit. The Minor Use Permit approval will include a permit number, maximum occupancy, conditions of approval, and an area in which to write in the contact information for the responsible party.
4. If the unit is advertised on the internet, the first line of the posting must include the vacation rental permit number for City reference.
5. If there is a history of the permit holder or tenants violating the permit's conditions, the Minor Use Permit may be revoked consistent with Section 17.156.110 (Permit Revocation). After a Minor Permit is revoked, the permit holder may reapply for a new permit one year after the revocation, or for a greater time period as established by the Community Development Director.
6. Permit holders must renew the business license and transient tax registration annually.

Attachment: Draft Zoning Code Public Review 02.04.2016 (1392 : Zoning Code Update)

17.40.040 Village Residential (-VR) Overlay Zone

A. Purpose. The purpose of the -VR overlay zone is to limit certain areas within the Village to exclusive residential use, including vacation rentals.

B. Land Use Regulations.

1. **Residential Uses Only.** Within the -VR overlay zone, only residential land uses (including vacation rentals) are permitted. Non-residential land uses, including but not limited to restaurants, retail, offices, and personal services, are not permitted in the -VR overlay zone.

2. **Existing Hotels and Motels.** Existing hotels and motels in the -VR overlay zone shall be legal nonconforming uses and may not be expanded or intensified. Alterations and modifications to existing hotels and motels shall occur in a manner consistent with Chapter 17.92 (Nonconforming Lots, Uses and Structures).

C. Development Standards. Development standards in the -VR overlay zone are the same as the Village Mixed Use (MU-V) zoning district.

Attachment: Draft Zoning Code Public Review 02.04.2016 (1392 : Zoning Code Update)

Chapter 17.44 – COASTAL OVERLAY ZONE

Sections:

17.44.010 Purpose
17.44.020 Definitions
17.44.030 Relationship to Base Zoning Districts
17.44.040 Allowed Land Uses
17.44.050 Development Standards
17.44.060 Coastal Permit Requirements
17.44.070 Coastal Permit Exemptions
17.44.080 Categorical Exclusions
17.44.090 Challenges to City Determinations
17.44.100 Application Submittal
17.44.110 Public Notice and Hearing
17.44.120 Findings for Approval
17.44.130 Notice of Final Action
17.44.140 Appeals
17.44.150 Permit Issuance
17.44.160 Emergency Permits
17.44.170 Coastal Permit Amendments

Note: The organization, style, and content of Chapter 17.46 in the existing Zoning Code has been substantially revised to increase clarity, remove unnecessary information, and match coastal overlay zone regulations of other jurisdictions in Santa Cruz County. Major substantive changes to Chapter 17.46 are noted below.

17.44.010 Purpose

This chapter establishes requirements for the Coastal (-CZ) overlay zone which applies to all areas within the City of Capitola Coastal Zone. The -CZ overlay zone implement's the City's Local Coastal Program (LCP) in a manner consistent with the requirements of the California Coastal Act and all associated State regulations. This chapter contains requirements for Coastal Permits to ensure that development projects in the -CZ overlay zone are consistent with the City's LCP and Local Coastal Implementation Program (LCIP).

17.44.020 Definitions

Specialized terms as used in this chapter are defined as follows.

A. Aggrieved Person. Any person who, in person or through a representative, appeared at a City public hearing in connection with the decision or action appealed, or who, by other appropriate means prior to a hearing informed the City of the nature of their concerns, or who for good cause was unable to do either.

Attachment: Draft Zoning Code Public Review 02.04.2016 (1392 : Zoning Code Update)

B. Coastal Emergency. A sudden, unexpected occurrence demanding immediate action to prevent or mitigate loss or damage to life, health, property or essential public services.

C. Development. Any of the following, whether on land or in or under water:

1. The placement or erection of any solid material or structure;
2. Discharge or disposal of any dredged material or of any gaseous, liquid, solid or thermal waste;
3. Grading, removing, dredging, mining or extraction of any materials;
4. Change in the density or intensity of use of land, including, but not limited to, subdivisions, and any other division of land, including lot splits, except where the land division is brought about in connection with the purchase of such land by a public agency for public recreational use;
5. Change in the intensity of use of water, or access thereto;
6. Construction, reconstruction, demolition or alteration in the size of any structure, including any facility of any private, public or municipal utility;
7. The removal or harvesting of major vegetation other than for agricultural purposes, kelp harvesting and timber operations which are in accordance with a timber harvesting plan submitted pursuant to the provisions of the Z'berg-Nejedly Forest Practice Act of 1973.

Development does not include the replacement of a mobile home with one which is not more than ten percent larger in floor area, nor equipping a mobile home with removable fixtures such as a porch, the total area of which does not exceed ten percent of the square footage of the mobile home itself.

D. Development, New. All development as defined above except the following:

1. Structures Destroyed by Natural Disaster. The replacement of any structure, other than a public works facility, destroyed by a disaster; provided, that the replacement structure conforms to applicable existing zoning requirements, is for the same use as the destroyed structure, does not exceed either the floor area, height, or bulk of the destroyed structure by more than ten percent, and is sited in the same location on the affected property as the destroyed structure. As used in this section, "disaster" means any situation in which the force or forces which destroyed the structure to be replaced were beyond the control of the owners.
2. Demolition and Reconstruction. The demolition and reconstruction of a single-family residence; provided, that the reconstructed residence shall not exceed either the floor area, height or bulk of the former structure by more than ten percent, and that the reconstructed residence shall be sited in the same location on the affected property as the former structure.

Attachment: Draft Zoning Code Public Review 02.04.2016 (1392 : Zoning Code Update)

3. Improvements. Improvements to any structure which do not change the intensity of its use, which do not increase either the floor area, height or bulk of the structure by more than ten percent, which do not block or impede access, and which do not result in a seaward encroachment by the structure.

4. Repair and Maintenance. Repair or maintenance activity which, pursuant to Public Resources Code Section 30610, requires no permit unless the activity will have an adverse impact on lateral public access along the beach.

5. Reconstruction and Repair. The reconstruction or repair of any seawall; provided, that the reconstructed or repaired seawall is not seaward of the location of the former structure. As used in this section, "reconstruction or repair" of a seawall shall not include replacement by a different type of structure or other modification design or construction which results in different or greater impacts to shoreline resources than those of the existing structure.

E. Local Coastal Program (LCP). The City's land use plan, Zoning Code, Zoning Map and actions certified by the Coastal Commission as meeting the requirements of the California Coastal Act of 1976.

F. Major Energy Facility. Any public or private processing, producing, generating, storing, transmitting or receiving facility for electricity, natural gas, petroleum, coal, or other source of energy for which the estimated construction costs exceed twenty-five thousand dollars.

G. Major Public Works Facility. Any public works project located within an area for which coastal permits are appealable, and that cost more than $25,000 except where service by a public agency is required to protect life and public property from imminent danger, or to restore, repair or maintain public works, utilities or services destroyed, damaged, or interrupted by natural disaster or serious accident.

H. Notice of Categorical Exclusion. A form signed by the Community Development Director stating that a development meets the requirements for exclusion and is exempt from the coastal permit requirement.

I. Sea. The Pacific Ocean and all harbors, bays, channels, estuaries, salt marshes, sloughs, and other areas subject to tidal action through any connection with the Pacific Ocean, excluding nonestuarine rivers, streams, tributaries, creeks and flood control and drainage channels. "Sea" does not include the area of jurisdiction of the San Francisco Bay Conservation and Development Commission, established pursuant to Title 7.2 (commencing with Section 66600) of the Government Code, including any river, stream, tributary, creek or flood control or drainage channel flowing directly or indirectly into such area.

J. Structure. Any improvement permanently attached to the ground, including, but is not limited to, any building, road, pipe, flume, conduit, siphon, aqueduct, telephone line and electrical power transmission and distribution line.

Attachment: Draft Zoning Code Public Review 02.04.2016 (1392 : Zoning Code Update)

17.44.030 Relationship to Base Zoning Districts

The -CZ overlay zone applies to property in conjunction with the base zoning districts. In case of a conflict between regulations, the regulations in this chapter shall take precedence over those of the base zoning district.

17.44.040 Allowed Land Uses

Allowed land uses in the -CZ overlay zone are the same as in the underlying base zoning district. Permits require for these uses (e.g., Conditional Use Permit, Administrative Permit) are the same as in the underlying base zoning district.

17.44.050 Development Standards

A. General. Development standards (e.g., structure height, setbacks) that apply to property in the -CZ overlay zone are the same as in the underlying base zoning district.

B. Affordable Housing Density. The City may approve a density greater than allowed by the base zoning district for affordable residential projects in the -CZ overlay zone if the following criteria are met:

1. The proposed increased density is consistent with the Coastal Act Section 30604(f), Government Code Section 65915, and Chapter 18.03 of the Capitola Municipal Code.
2. The project is found to be in conformity with the Local Coastal Program (including, but not limited to, sensitive habitat, public viewshed, public recreational access and open space protections), with the exception of the density provisions.

17.44.060 Coastal Permit Requirements

A. Permit Required. All development within the -CZ overlay zone requires a coastal permit except as specified in Section 17.44.070 (Coastal Permit Exemptions) and Section 17.44.080 (Coastal Permit Exclusions).

B. Review Authority.

1. The Planning Commission shall take action on all coastal permit applications that require other discretionary approval by the City.
2. The Community Development Director shall take action on all coastal permit applications for projects that require no other discretionary approval by the City.
3. The City Council may take action on coastal permit applications for public works projects that require no other discretionary permit approvals from the City other than funding approval.
4. Development authorized by a Coastal Commission issued permit remains under the jurisdiction of the Coastal Commission for the purposes of condition compliance, amendment and revocation. An addition to development completed

under the authority of a Coastal Commission-issued permit shall be reviewed by the City pursuant to an application for a new permit, provided that the Coastal Commission determines that the addition is not contrary to any terms or condition of the Commission issued permit.

C. Additional Permits. The review of a coastal permit application shall be processed concurrently with any other discretionary permit applications required by the City. The City may not grant any discretionary approval for a proposed project that conflicts with this chapter. Discretionary approvals become effective only after a coastal permit is approved as required by this chapter.

Note: Permit requirements for legal and illegal development in subsections D and E below are new.

D. Legal Development and Permitting Processes. Development that legally occurred prior to the effective date of the Coastal Act of 1976 is considered lawfully established development. Improvements, repair, modification, or additions subject to such existing development requires a coastal permit in accordance with the provisions of this chapter. The coastal permit may be approved if the proposed development is consistent with the policies and standards of the City's LCP.

E. Illegal Development and Permitting Processes. Development that occurred after the effective date of the Coastal Act of 1976 and that did not receive a coastal permit or was not otherwise authorized under the Coastal Act, is not lawfully established or authorized development. No improvements, repair, modification, or additions to such existing development may be approved unless a coastal permit is approved that authorizes the existing development. The coastal permit shall only be approved if the existing and proposed development is consistent with the policies and standards of the City's LCP.

17.44.070 Coastal Permit Exemptions

The following projects are exempt from the requirement to obtain a coastal permit.

A. Existing Single-Family Residences. Improvements to an existing single-family residence, including fixtures and structures directly attached to a residence, landscaping, and structures normally associated with a single-family residence, such as garages, swimming pools, fences and storage sheds, but not including guest houses or self-contained residential units. This exemption does not include:

1. Improvements to a single-family residence if the residence and/or improvement is located on a beach, wetland, seaward of the mean high-tide line, within an environmentally sensitive habitat area, in an area designated highly scenic in the LCP, or within 50 feet of the edge of a coastal bluff.

2. Any significant alteration of land forms including removal or placement of vegetation on a beach, wetland, or sand dune, within 50 feet of the edge of a coastal bluff, or within an environmentally sensitive habitat area.

Attachment: Draft Zoning Code Public Review 02.04.2016 (1392 : Zoning Code Update)

3. The expansion or construction of water wells or septic systems.

4. On property not included in Subparagraph A.1 above that is located between the sea and the first public road paralleling the sea, within 300 feet of the inland extent of any beach or of the mean high tide of the sea where there is no beach, whichever is the greater distance, or in a significant public viewshed, when one of the following circumstances apply:

   a. Improvement that would result in an increase of 10 percent or more of internal floor area of an existing structure; or

   b. An additional improvement of 10 percent or less where an improvement to the structure has previously been undertaken pursuant to this section; or

   c. An increase in height by more than ten percent of an existing structure; and/or

   d. Any significant non-attached structure such as garages, fences, shoreline protective works or docks.

5. In areas having a critically short water supply as declared by resolution of the Coastal Commission, construction of major water-using development not essential to residential use such as swimming pools, or construction or extension of landscape irrigation systems.

6. Any improvement to a single-family residence where the coastal permit issued for the original structure by the Coastal Commission or City indicated that any future improvements would require a coastal permit.

B. Other Existing Structures. Improvements to an existing structure, other than a single-family residence or public works facility, including landscaping, fixtures, and structures directly attached to the structure. This exemption does not include:

1. Improvements to a structure if the structure and/or improvement is located on a beach, wetland, or stream; seaward of the mean high-tide line; in an area designated highly scenic in the LCP; or within 50 feet of the edge of a coastal bluff.

2. Any significant alteration of land forms including removal or placement of vegetation, on a beach or sand dune; in a wetland or stream; within 100 feet of the edge of a coastal bluff, in a highly scenic area, or in an environmentally sensitive habitat area.

3. The expansion or construction of water wells or septic systems.

4. On property not included in subparagraph B.1 above that is located between the sea and the first public road paralleling the sea, within 300 feet of the inland extent of any beach or of the mean high tide of the sea where there is no beach, whichever is the greater distance, or in a significant public viewshed, when one of the following circumstances apply:

   a. Improvement that would result in an increase of 10 percent or more of internal floor area of an existing structure;

Attachment: Draft Zoning Code Public Review 02.04.2016 (1392 : Zoning Code Update)

b. An additional improvement of 10 percent or less where an improvement to the structure has previously been undertaken pursuant to this section;

c. An increase in height by more than 10 percent of an existing structure; or

d. Any significant non-attached structure such as garages, fences, shoreline protective works or docks.

5. In areas having a critically short water supply as declared by resolution of the Coastal Commission construction of major water-using development not essential to residential use such as swimming pools, or construction or extension of landscape irrigation systems.

6. Any improvement to a structure where the coastal permit issued for the original structure by the Coastal Commission or City indicated that any future improvements would require a coastal permit.

7. Any improvement to a structure which changes the intensity of use of the structure.

8. Any improvement made pursuant to a conversion of an existing structure from a multiple unit rental use or visitor-serving commercial use to a use involving a fee ownership or long-term leasehold including, but not limited to, a condominium conversion, stock cooperative conversion or motel/hotel timesharing conversion.

C. Maintenance Dredging of Navigation Channels. Maintenance dredging of existing navigation channels or moving dredged material from those channels to a disposal area outside the coastal zone, pursuant to a permit from the United States Army Corps of Engineers.

D. Public Roads. Repair and maintenance of existing public roads, including resurfacing and other comparable development necessary to maintain the existing public road facility as it was constructed, provided that:

1. There is no excavation or disposal of fill outside the existing roadway prism; and

2. There is no addition to and no enlargement or expansion of the existing public road.

E. Public Parks. Routine maintenance of existing public parks, including repair or modification of existing public facilities and landscaping where the level or type of public use or the size of structures will not be altered.

F. Public Utilities. Repair, maintenance, replacement, and minor alterations of existing public water, sewer, natural gas, electrical, telephone, television, and flood control infrastructure.

G. Repair or Maintenance Activities. Repair or maintenance activities that do not result in an addition to, or enlargement or expansion of, the object of those repair or maintenance activities. This exemption does not include:

1. Any method of repair or maintenance of a seawall revetment, bluff retaining wall, breakwater, groin, culvert, outfall, or similar shoreline work that involves:

   a. Repair or maintenance involving substantial alteration of the foundation of the protective work including pilings and other surface or subsurface structures;

   b. The placement, whether temporary or permanent, of rip-rap, artificial berms of sand or other beach materials, or any other forms of solid materials, on a beach or in coastal waters, streams, wetlands, estuaries and lakes or on a shoreline protective work except for agricultural dikes within enclosed bays or estuaries;

   c. The replacement of twenty percent or more of the materials of an existing structure with materials of a different kind; or

   d. The presence, whether temporary or permanent, of mechanized construction equipment or construction materials on any sand area, bluff, or environmentally sensitive habitat area, or within twenty feet of coastal waters or streams.

2. Any method of routine maintenance dredging that involves:

   a. The dredging of 100,000 cubic yards or more within a twelve month period;

   b. The placement of dredged spoils of any quantity within an environmentally sensitive habitat area, on any sand area, within 50 feet of the edge of a coastal bluff or environmentally sensitive habitat area, or within 20 feet of coastal waters or streams; or

   c. The removal, sale, or disposal of dredged spoils of any quantity that would be suitable for beach nourishment in an area the commission has declared by resolution to have a critically short sand supply that must be maintained for protection of structures, coastal access or public recreational use.

3. Any repair or maintenance to facilities or structures or work located in an environmentally sensitive habitat area, any sand area, within 50 feet of the edge of a coastal bluff or environmentally sensitive habitat area, or within 20 feet of coastal waters or streams that include:

   a. The placement or removal, whether temporary or permanent, of rip-rap, rocks, sand or other beach materials or any other forms of solid materials.

   b. The presence, whether temporary or permanent, of mechanized equipment or construction materials.

   c. Unless destroyed by natural disaster, the replacement of 50 percent or more of a single family residence, seawall, revetment, bluff retaining wall, breakwater, groin or any other structure that is not repair and maintenance under Coastal Act Section 30610(d) but instead constitutes a replacement structure requiring a coastal permit.

Attachment: Draft Zoning Code Public Review 02.04.2016 (1392 : Zoning Code Update)

4. In any particular case, even though a method of repair and maintenance is identified above, the Executive Director of the Coastal Commission may, where the Director finds the impact of development on coastal resources or coastal access to be insignificant, waive the requirement of a permit. The waiver shall not be effective until it is reported to the Coastal Commission at its next regularly scheduled meeting. If any three commissioners object the waiver, the proposed improvement may not be undertaken without a permit.

H. Replacement of Destroyed Structures. The replacement of any structure, other than a public works facility, destroyed by a disaster. The replacement structure shall conform to applicable existing zoning requirements, shall be for the same use as the destroyed structure, shall not exceed either the floor area, height, or bulk of the destroyed structure by more than 10 percent, and shall be sited in the same location on the affected property as the destroyed structure.

I. Conversion of Existing Multi-Unit Residential Structures. The conversion of any existing multi-unit residential structure to a time-share project, estate, or use, as defined in Section 11212 of the Business and Professions Code. If any improvement to an existing structure is otherwise exempt from the permit requirements of this chapter, no coastal permit is required for that improvement on the basis that it is to be made in connection with any conversion exempt pursuant to this subdivision. The division of a mult-unit residential structure into condominiums, as defined in Section 783 of the Civil Code, is be considered a time-share project, estate, or use for purposes of this paragraph.

J. Temporary Events. Temporary events as defined in this section and which meet all of the following criteria:

1. The event will not occur between the Saturday of Memorial Day weekend through Labor Day, or if proposed in this period will be of less than one day in duration including setup and take-down; and

2. The event will not occupy any portion of a publicly or privately owned sandy beach or park area, public pier, public beach parking area and there is no potential for adverse effect on sensitive coastal resources; and

3. A fee will not be charged for general public admission and/or seating where no fee is currently charged for use of the same area (not including booth or entry fees); or if a fee is charged, it is for preferred seating only and more than 75 percent of the provided seating capacity is available free of charge for general public use; and

4. The proposed event has been reviewed in advance by the City and it has been determined that it meets the following criteria:

   a. The event will result in no adverse impact on opportunities for public use of or access to the area due to the proposed location and or timing of the event either individually or together with other development or temporary events scheduled before or after the particular event;

Attachment: Draft Zoning Code Public Review 02.04.2016 (1392 : Zoning Code Update)

b. There will be no direct or indirect impacts from the event and its associated activities or access requirements on environmentally sensitive habitat areas, rare or endangered species, significant scenic resources, or other coastal resources;

c. The event has not previously required a coastal permit to address and monitor associated impacts to coastal resources.

K. Emergency Work. Immediate emergency work necessary to protect life or property, or immediate emergency repairs to public service facilities necessary to maintain service as a result of a disaster in a disaster-stricken area in which a state of emergency has been proclaimed by the Governor.

17.44.080 Categorical Exclusions

A. Coastal Exclusion Zone A. Within Coastal Exclusion Zone A, as shown in the Capitola Permit and Appeal Jurisdiction Map, the following projects do not require a coastal permit:

1. **Residential Projects.**

a. The construction of new residential projects, including accessory dwelling units, and the reconstruction, demolition, repair, relocation, alteration or addition to a residential project of one to four units on existing lots at densities specified in the LCP, on lots of record or lot combinations legal as of the date of LCP certification.

b. The installation of fixtures and other structures accessory to the main residence, including but not limited to patio covers, swimming pools, garages, greenhouses, gazebos, fences, pre-fabricated storage sheds, and non-habitable accessory structures.

2. **Non-Residential Projects.**

a. The construction, reconstruction, demolition, relocation, or alteration of the size of a commercial structure less than 5,000 square feet in size located on legal lots of record zoned for commercial use.

b. Additions to existing structures where the resulting size is 5,000 square feet or less.

c. Change of use from commercial, industrial, public or quasi-public use in an existing structure.

d. Outdoor sales, commercial sidewalk/parking lot sales and outdoors display of merchandise.

e. Exclusions are not permitted for any improvement associated with the conversion of an existing structure occupied by visitor-serving hotels, motels or other accommodations.

Attachment: Draft Zoning Code Public Review 02.04.2016 (1392 : Zoning Code Update)

3. **Land Clearing.** When consistent with the City Community Tree and Forest Ordinance No. 863.

4. **Boundary Adjustments.** Boundary adjustments not resulting in an increase in the number of building sites, buildable lots, or density of permitted development.

5. **Grading and Filling.** Grading and filling in conjunction with an approved project; or grading and filling consistent with the local coastal program provisions.

6. **Temporary Structures.** All temporary (six months or less; non-renewable) structures and uses consistent with City regulations and that do not conflict with public access and access policies.

7. **Other Excluded Development and Activities.**

   a. Abatement of dangerous buildings and other nuisances pursuant to the Municipal Code.

   b. Any project undertaken by a federal agency.

   c. Construction of new bikeways (within existing rights-of-ways), except if new construction reduces parking in the beach areas.

   d. Development requiring land use determinations with no potential for adverse impacts, and not including or affecting any visitor-serving uses.

   e. Driveway width modification requests which are in accordance with the provisions contained in Municipal Chapter 12.32.

   f. Encroachment permits.

   g. Home occupations.

   h. Interior remodels and tenant improvements in residential and commercial structures when no intensification of the use and no loss of visitor-serving use is taking place.

   i. Lot mergers, certificates of compliance, and reversions not resulting in a net increase in the number of building sites or potential building sites.

   j. Public signs and other equipment installation in the public right-of-way, including but not limited to parking meters.

   k. Projects with valid permit from the California Coastal Commission.

   l. The installation of new or replacement signs and modifications to existing signs, provided the sign meets the requirements of the City of Capitola sign ordinance and/or LUP-Implementation Plan, and excluding those signs governing shoreline areas.

   m. Tree removals consistent with Municipal Code Chapter 12.12 (Community Tree and Forest Management).

Attachment: Draft Zoning Code Public Review 02.04.2016 (1392 : Zoning Code Update)

B. Coastal Exclusion Zone B. Within Coastal Exclusion Zone B, as shown in the Capitola Permit and Appeal Jurisdiction Map, the following projects do not require a coastal permit:

1. **Bikeways.** Construction of new bikeways (within existing rights-of-ways), except if new construction reduces parking in the beach areas.
2. **Fences.** Fence up to six feet in height with an additional two feet of lattice, per the Capitola development standards.
3. **Fixtures and Accessory Structures.** Attached fixtures and accessory structures up to 120 square feet.
4. **Residential Remodels.** Improvements to single-family residences or minor residential remodels, not located in the environmentally sensitive habitat areas, including additions up to thirty percent of living area or not exceeding 400 square feet, whichever is less, and with less than ten percent increase in height, with architectural materials and colors to match the existing house.
5. **Public Signs and Equipment.** Public signs and other equipment installation in the public right-of-way, including but not be limited to parking meters.
6. **Secondary Dwellings Units.** Secondary dwelling units consistent with Chapter 17.74 (Secondary Dwelling Units).
7. **Signs.** The installation of new or replacement signs and modifications to existing signs consistent with Chapter 17.80 (Signs), and excluding those signs governing shoreline areas.
8. **Temporary Structures.** All temporary (six months or less; non-renewable) structures and uses consistent with regulations and do not conflict with public access and access policies.

C. Determination of Excludability.

1. The determination of whether a development is categorically excluded or not, for purposes of notice, hearings, and appeals, shall be made by the Community Development Director at the time the coastal permit application is submitted.
2. This determination shall be made with reference to the certified LCP, including any maps, categorical exclusions, land use designations and zoning regulations adopted as part of the LCP. Only developments that fully comply with the certified LCP may be allowed under a categorical exclusion.

D. Notice of Exclusion.

1. Notices of exclusion shall be issued on forms prepared for that purpose by the Community Development Department, and shall indicate the developer's name, street address, if any, and assessor's parcel number of the project site, a brief description of the development, and the date of application for any other permit.

Attachment: Draft Zoning Code Public Review 02.04.2016 (1392 : Zoning Code Update)

2. A copy of the notice of exclusion shall be provided to the Coastal Commission and to any person who has requested such notice within five working days of issuance. The notice of exclusion may be issued at the time of project application but shall not become effective until all other approvals and permits required for the project are obtained. A copy of all terms and conditions imposed by the City shall be provided to the Coastal Commission, pursuant to Section 13315 of the California Code of Regulations.

E. Effect of a Categorical Exclusion Order. Pursuant to the California Code of Regulations Section 13247, an order granting an exclusion for a category of development removes that category of development from the permit requirements of Chapter 7 of the California Coastal Act of 1976 to the extent and in the manner specifically provided in the exclusion order. Only development consistent with such order may take place unless the order is amended or terminated or a coastal permit is issued.

17.44.090 Challenges to City Determinations

In the case of disputes over the City's determination of Coastal Permit requirement, exclusion or applicable hearing and appeals procedures, the Community Development Director shall request an opinion of the Executive Director of the Coastal Commission. Local acceptance for filing and/or processing of the permit application shall cease until the Community Development Department receives the determination of appropriate process from the Executive Director of the Coastal Commission or the Coastal Commission.

17.44.100 Application Submittal

A. Coastal permit applications shall be filed and reviewed in compliance with Chapter 17.112 (Permit Application and Review). The application shall include the information and materials required by the Community Development Department, together with all required application fees. It is the responsibility of the applicant to provide evidence in support of the findings required by Section 17.44.120 (Findings for Approval).

B. Application for a coastal permit shall be made concurrently with application for any other permits or approvals required by the Zoning Code.

C. At time of submittal of coastal permit application, the City shall make a determination of whether the development is categorically excluded, exempted, appealable, or non-appealable.

17.44.110 Public Notice and Hearing

A. Planning Commission Review. The Planning Commission shall review and act on a coastal permit application at a noticed public hearing in compliance with Chapter 17.148 (Public Notice and Hearings). However, processing at levels other than the Planning Commission shall apply in the following cases:

Attachment: Draft Zoning Code Public Review 02.04.2016 (1392 : Zoning Code Update)

1. **City Council Review.** The proposed development requires other discretionary permit approvals to be reviewed and acted upon by the City Council, in which case the coastal permit application will be reviewed and acted on by the City Council; or

2. **Minor Development.** The City may waive the public hearing requirement for "minor development" that requires no other discretionary approval by the City. A public hearing may be waived if the project has no potential for adverse effects on coastal resources or public access to the shoreline, is consistent with the certified LCP, and if the following apply:
   a. Notice that a public hearing would be held upon request is sent to all persons who would otherwise be required to be notified of a public hearing and any other persons who have shown interest;
   b. No request for a public hearing is received within fifteen working days from the date notice was mailed out; and
   c. The notice discloses that the failure to request a public hearing triggers the loss of appeal power on the matter being considered for administrative approval.

17.44.120 Findings for Approval

Note: Findings for approval of all coastal permits in this section are new.

To approve a coastal permit, the review authority shall make all of the following findings:

A. The project is consistent with the General Plan, the LCP, and the Local Coastal Implementation Program.

B. The project maintains views between the sea and the first public roadway parallel to the sea.

C. The project protects vegetation, natural habitats and natural resources consistent with LCP.

D. The design, location, size, and operating characteristics of the proposed development is consistent with any applicable design plans and/or area plans incorporated into the LCP.

E. The project maintains public access to the coast along any coastline as set forth in the LCP.

F. The project supports the LCP goal of providing visitor-serving needs as appropriate.

G. The project is consistent with the LCP goal of encouraging appropriate coastal development uses.

H. The proposed development protects and where feasible enhances coastal resources.

Attachment: Draft Zoning Code Public Review 02.04.2016 (1392 : Zoning Code Update)

17.44.130 Notice of Final Action

Within seven calendar days of a final decision on a coastal permit application, the City shall provide notice of its action by first class mail to the applicant, the Coastal Commission, and any other persons who have requested such notice by submitting a self-addressed, stamped envelope to the City. The notice shall contain the City's adopted findings, conditions of approval, indication of whether the project is appealable to the Coastal Commission, and procedures for appeal to the Commission. The City's decision on a coastal permit application shall be deemed final when all local rights of appeal have been exhausted as defined in Section 17.44.140 (Appeals).

17.44.140 Appeals

A. Local Appeals. Planning Commission decisions on coastal permits may be appealed to the City Council as described in Chapter 17.152 (Appeals).

B. Appeals to the Coastal Commission.

1. Any approval decision by the City on a coastal permit, or any approval or denial decision by the City on a coastal permit for a major public works project (including a publicly financed recreational facility and/or a special district development) or an energy facility, may be appealed to the Coastal Commission.
2. Appeals to the Coastal Commission may be filed by the project applicant, any aggrieved person, or any two members of the Coastal Commission.
3. The following types of projects may be appealed to the Coastal Commission.
   a. Projects located between the sea and the first public road paralleling the sea or within 300 feet of the inland extent of any beach or of the mean high tide line of the sea where there is no beach, whichever is the greater distance.
   b. Projects located on tidelands, submerged lands, public trust lands, within 100 feet of any wetland, estuary, or stream, or within 300 feet of the top of the seaward face of any coastal bluff.
   c. Projects in a sensitive coastal resource area as defined in the LCP.
   d. Any development which constitutes a major public works project or a major energy facility.
4. Appeals must be submitted to the Coastal Commission within 10 calendar days of Coastal Commission receipt of a complete note of final action.
5. City decisions may be appealed to the Coastal Commission only after an appellant has exhausted all local appeals, except that exhaustion of all local appeals is not required if any of the following occur:
   a. The City requires an appellant to appeal to more local appellate bodies than have been certified as appellate bodies for coastal permits in the coastal zone.

b. An appellant was denied the right of the initial local appeal by a City ordinance which restricts the class of persons who may appeal a local decision.

c. An appellant was denied the right of local appeal because City notice and hearing procedures for the development did not comply with the provisions of this title.

d. The City required an appeal fee for the filing or processing of the appeal.

6. Grounds for appeal of an approved coastal permit are limited to the following:

a. The development fails to provide adequate physical access, public or private commercial use, or interferes with such uses;

b. The development fails to protect public views from any public road or from a recreational area to and along the coast, as identified in the certified local coastal program;

c. The development is not compatible with the established physical scale of the area, as identified in the certified local coastal program;

d. The development may significantly alter existing natural landforms;

e. The development does not comply with shoreline erosion and geologic setback requirements.

17.44.150 Permit Issuance

A. Effective Date of a Coastal Permit.

1. In areas outside the Coastal Commission appeal area, coastal permits shall become effective seven working days after the City's final decision.

2. In areas within the Coastal Commission appeal area, coastal permits shall become effective ten working days if no appeal has been filed. The ten-day appeal period shall start the day after the Coastal Commission receives adequate notice of the final local action.

B. Expiration of Permits. A coastal permit not exercised within two years shall expire and become void, except where an extension of time is approved as allowed by Section 17.156.080.C (Extension of Time).

C. Revocation of Permits. Coastal permits may be revoked as provided for in Section 17.156.110 (Permit Revocation)

D. Resubmittals. For a period of twelve months following the denial or revocation of a coastal permit, the City shall not accept an application for the same or substantially similar permit for the same site, unless the denial or revocation was made without prejudice, and so stated in the record.

Attachment: Draft Zoning Code Public Review 02.04.2016 (1392 : Zoning Code Update)

17.44.160 Emergency Permits

A. Purpose. Emergency coastal permits may be granted at the discretion of the Community Development Director or a local official designated by the City Council for projects normally requiring coastal permit approval. To be eligible for an emergency permit, a project must be undertaken as an emergency measure to prevent loss or damage to life, health or property, or to restore, repair, or maintain public works, utilities and services during and immediately following a natural disaster or serious accident.

B. Application. Application for an emergency permit shall be made to the City by letter if time allows, and by telephone or in person if time does not allow. The applicant shall submit the appropriate fees at the time of application for an emergency permit.

C. Required Information. The information to be reported during the emergency, if it is possible to do so, or to be fully reported after the emergency, shall include all of the following:

1. The nature of the emergency.
2. The cause of the emergency, insofar as this can be established.
3. The location of the emergency.
4. The remedial, protective or preventive work required to deal with the emergency.
5. The circumstances during the emergency that appeared to justify the course of action taken, including the probable consequences of failing to take action.

D. Verification of Facts. The Community Development Director or other designated local official shall verify the facts, including the existence and nature of the emergency, as time allows.

E. Public Notice. If time allows, the Community Development Director shall provide public notice of the proposed emergency action, with the extent and type of notice determined on the basis of the nature of the emergency itself.

F. Criteria for Granting Permit. The Community Development Director may grant an emergency permit upon making all of the following findings:

1. An emergency exists and requires action more quickly than permitted by the procedures for ordinary permits.
2. The development can and will be completed within thirty days unless otherwise specified by the terms of the permit.
3. Public comment on the proposed emergency action has been reviewed if time allows.
4. The work proposed would be consistent with the requirements of the certified LCP.

Attachment: Draft Zoning Code Public Review 02.04.2016 (1392 : Zoning Code Update)

G. Conditions. The Community Development Director may attached reasonable terms and conditions to the granting of an emergency permit, including an expiration date and the necessity for a regular permit application by a specified date.

H. Limitations.

1. The emergency work authorized under approval of an emergency permit shall be limited to activities necessary to protect the endangered structure or essential public structure.
2. The emergency approval shall be voided if the approved activity is not exercised within 15 days of issuance of the emergency permit.
3. The approval shall expire 60 days after issuance. Any work completed outside of these time periods requires a regular coastal permit approval unless an extension is granted by the City.

I. Application for Regular Coastal Permit. Upon the issuance of an emergency permit, the applicant shall submit a completed coastal permit application and any required technical reports within a time specified by the Community Development Director, not to exceed 30 days.

J. Reporting of Emergency Permits. The Community Development Director shall report emergency permits to the Coastal Commission and to the City Council and Planning Commission.

17.44.170 Coastal Permit Amendments

A. New Application. An applicant may request an amendment a coastal permit by filing a new application pursuant to the requirements of this chapter.

B. Consistency Required. Any amendment approved for development in the coastal zone shall be found consistent with all applicable local coastal program requirements and this chapter with regards to requirements of jurisdiction, hearings, notices and findings for approval.

Attachment: Draft Zoning Code Public Review 02.04.2016 (1392 : Zoning Code Update)

PART 3

Citywide Standards

Chapter 17.48 - Height, Setbacks, and Floor Area…… 48-1

17.48.010 Purpose
17.48.020 Height Measurement and Exceptions
17.48.030 Setback Measurement and Exceptions
17.48.040 Floor Area and Floor Area Ratio

Chapter 17.52 - Accessory Structures and Uses……...52-1

17.52.010 Purpose and Applicability
17.52.020 Accessory Structures
17.52.030 Accessory Uses

Chapter 17.56 - Archaeological and Paleological Resources…… 56-1

17.56.010 Purpose and Intent
17.56.020 Coastal Permit
17.56.030 Archaeological Survey Report
17.56.040 Environmental Assessment Requirement
17.56.050 Development Standards

Chapter 17.60 - Fences and Walls…… 60-1

17.60.010 Permit Requirements
17.60.020 Measurement of Fence and Wall Height
17.60.030 Height Limits
17.60.040 Fences Adjacent to Soquel Creek Pathway and Grand Avenue Walkway
17.60.050 Materials
17.60.060 Parking Lot Screening
17.60.070 Nonconforming Fences and Walls

Chapter 17.64 - Environmentally Sensitive Habitat Areas…… 64-1

17.64.010 Purpose
17.64.020 Applicability
17.64.030 General Standards
17.64.040 Soquel Creek and Lagoon
17.64.050 Soquel Creek and Escalona Gulch Monarch Butterfly Habitat Areas
17.64.060 Escalona Gulch Monarch Butterfly Habitat Areas

Attachment: Draft Zoning Code Public Review 02.04.2016 (1392 : Zoning Code Update)

Chapter 17.68 - Geological Hazards…… 68-1

17.68.010 Purpose and Applicability
17.68.020 Geologic/Engineering Report
17.68.030 Shoreline Protection Measures
17.68.040 Development in Bluff and Cliff Areas

Chapter 17.72 - Landscaping…….. 72-1

17.72.010 Purpose
17.72.020 Applicability
17.72.030 Water Efficient Landscape Design and Installation Ordinance
17.72.040 Landscape Plans
17.72.050 Required Landscape Areas
17.72.060 Landscape Standards

Chapter 17.74 - Secondary Dwelling Units…… 74-1

17.60.010 Purpose
17.60.020 Permitted Location
17.60.030 Required Permits
17.60.040 Design and Development Standards
17.60.050 Findings
17.60.060 Deed Restrictions
17.60.070 Incentives

Chapter 17.76 - Parking and Loading…… 76-1

17.76.010 Purpose
17.76.020 Applicability
17.76.030 Required Parking Spaces
17.76.040 General Requirements
17.76.050 On-site Parking Alternatives
17.76.060 Parking Design and Development Standards
17.76.070 Parking Lot Landscaping
17.76.080 Bicycle Parking
17.76.090 On-site Loading
17.76.100 Shuttle Program Parking

Chapter 17.80 -Signs……..... 80-1

17.80.010 Purpose
17.80.020 Definitions
17.80.030 Permit Requirements
17.80.040 Rules of Measurement
17.80.050 Signs Allowed Without Permits
17.80.060 Prohibited Signs
17.80.070 General Sign Standards

Attachment: Draft Zoning Code Public Review 02.04.2016 (1392 : Zoning Code Update)

17.80.080 Standards for Specific Types of Signs
17.80.090 Sign Standards for Zoning Districts
17.80.100 Residential Signs
17.80.110 Temporary Signs
17.80.120 Adjustment to Sign Standards
17.80.130 Master Sign Program
17.80.140 Nonconforming Signs
17.80.150 Violations and Enforcement

Chapter 17.84 - Historic Preservation……..84-1

17.84.010 Purpose
17.84.020 Types of Historic Resources
17.84.030 Adding or Removing Historic Landmark Designation
17.84.040 Maintenance of Historic Structures List
17.84.050 Criteria for Designating Historic Resources
17.84.060 Certificate of Appropriateness
17.84.070 Historic Preservation Incentives
17.84.080 Demolition of Historic Resources

Chapter 17.88 - Incentives for Community Benefits…… 88-1

17.88.010 Purpose
17.88.020 Incentives Restricted to Added Benefits
17.88.030 Allowable Benefits
17.88.040 Available Incentives
17.88.050 Relationship to State Density Bonus Law
17.88.060 Application Submittal and Review
17.88.070 Public Notice and Hearing
17.88.080 Findings
17.88.090 Post-Decision Procedures

Chapter 17.92 - Nonconforming Parcels, Uses, and Structures…… 92-1

17.92.010 Purpose
17.92.020 Applicability
17.92.030 General
17.92.040 Nonconforming Parcels
17.92.050 Nonconforming Use of Land
17.92.060 Nonconforming Use of Structures
17.92.070 Nonconforming Multi-Family Uses in the R-1 Zoning District
17.92.080 Nonconforming Structures
17.92.090 Findings

Attachment: Draft Zoning Code Public Review 02.04.2016 (1392 : Zoning Code Update)

Chapter 17.96 - Supplemental Standards…… 96-1

17.96.010 Purpose
17.96.020 Animal Keeping
17.96.030 Emergency Shelters
17.96.040 Home Occupations
17.96.050 Intersection Sight Distance
17.96.060 Large Commercial Land Uses
17.96.070 Large Home Day Care
17.96.080 Large Residential Care Facilities
17.96.090 Offshore Oil Development Support Facilities
17.96.100 Permanent Outdoor Displays
17.96.110 Outdoor Lighting
17.96.120 Placement of Underground Utilities
17.96.130 Recycling Collection Facilities
17.96.140 Residential Mixed Use Development in Commercial Zoning Districts
17.96.150 Self-Storage Facilities
17.96.160 Solar Energy Systems
17.96.170 Soquel Creek Pathway, Bulkheads, and Decks
17.96.180 Temporary Sidewalk Dining
17.96.190 Temporary Uses and Structures
17.96.200 Unattended Donation Boxes

Chapter 17.100 - Mobile Home Park Conversions……100-1

17.100.010 Purpose and Intent
17.100.020 Applicability
17.100.030 Definitions
17.100.040 Relocation Impact Report
17.100.050 Notice to Prospective Occupants of Pending Change in Park Status
17.100.060 Exemptions from Relocation Assistance Obligations
17.100.070 Application for Change of Use – Public Hearing – Findings
17.100.080 Measures to Prevent Avoidance of Relocation Assistance Obligations
17.100.090 Compliance with Relocation Assistance
17.100.100 Modification and Revocation of Approved Closure or Conversion
17.100.110 Expiration and Extension of Approval
17.100.120 Preemption
17.100.130 Severability

Chapter 17.104 - Wireless Communication Facilities……104-1

17.104.010 Purpose
17.104.020 Definitions

Attachment: Draft Zoning Code Public Review 02.04.2016 (1392 : Zoning Code Update)

17.104.030 Applicability
17.104.040 Permits and Approvals
17.104.050 Location Standards
17.104.060 Development Standards
17.104.070 Small Cells and Distributed Antenna Systems
17.104.080 Antenna Siting and Mounting Techniques
17.104.090 Modifications to Existing Facilities
17.104.100 Operational Standards
17.104.110 Miscellaneous Requirements
17.104.120 Severability

Attachment: Draft Zoning Code Public Review 02.04.2016 (1392 : Zoning Code Update)

Attachment: Draft Zoning Code Public Review 02.04.2016 (1392 : Zoning Code Update)

Chapter 17.48 – HEIGHT, SETBACKS, AND FLOOR AREA

Sections:

17.48.010 Purpose
17.48.020 Height Measurement and Exceptions
17.48.030 Setback Measurement and Exceptions
17.48.040 Floor Area and Floor Area Ratio

17.48.010 Purpose

This chapter establishes rules for the measurement of height, setbacks, and floor area, and permitted exceptions to height and setback requirements.

17.48.020 Height Measurement and Exceptions

A. Measurement of Height.

1. The height of a building is measured as the vertical distance from the assumed ground surface to the highest point of the building.
2. Assumed ground surface means a line on the exterior wall of a building that connects the points where the perimeter of the wall meets the finished grade. See Figure 17.48-1.
3. If grading or fill on a property within five years of an application increases the height of the assumed ground service, height shall be measured using an estimation of the assumed ground surface as it existed prior to the grading or fill.

FIGURE 17.48-1: MEASUREMENT OF MAXIMUM PERMITTED BUILDING HEIGHT

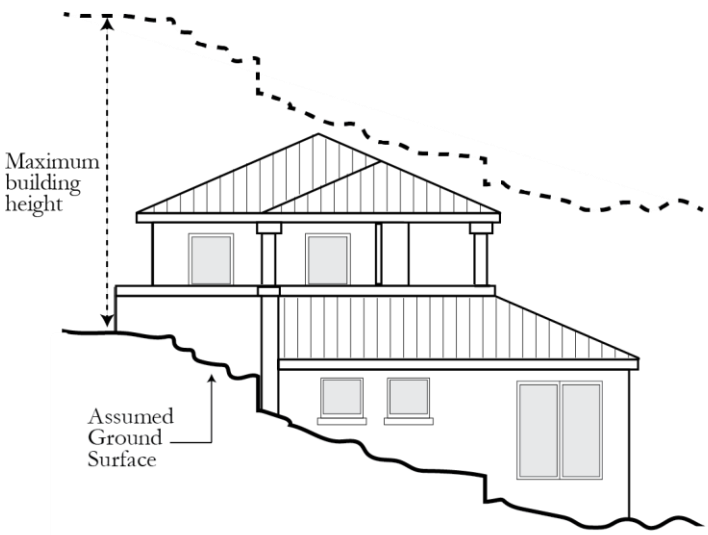

Attachment: Draft Zoning Code Public Review 02.04.2016 (1392 : Zoning Code Update)

B. Height Exceptions. Buildings may exceed the maximum permitted height in the applicable zoning district as shown in Table 17.48-1.

Note: Height exceptions in Table 17.48-1 below add detail to height exceptions in Section 17.81.070 of the existing Zoning Code.

TABLE 17.48-1: ALLOWED PROJECTIONS ABOVE HEIGHT LIMITS

Structures Allowed Above Height Limit	Maximum Coverage	Maximum Projection Above Height Limit
Non-habitable decorative features including spires, belfries, cupolas, domes and other similar architectural elements	10% of roof area	3 ft. in the R-1 zoning district; 6 ft. elsewhere
Skylights	20% of roof area	1 ft.
Chimneys not over 6 feet in width	10% of roof area	3 ft. in R-1 zoning district; 6 ft. elsewhere
Flagpoles not over 8 inches in width	N/A	3 ft. in R-1 zoning district; 6 ft. elsewhere
Photovoltaic panels	No restriction	4 ft.
Wind energy systems	No restriction	10 ft.
Building mounted telecommunications facilities	See Chapter 17.104	

17.48.030 Setback Measurement and Exceptions

A. Setback Measurement. Setbacks shall be measured as the distance between the property line and the nearest point of the structure along a line at a right angle to the property line. See Figure 17.48-2.

FIGURE 17.48-2: SETBACK MEASUREMENT

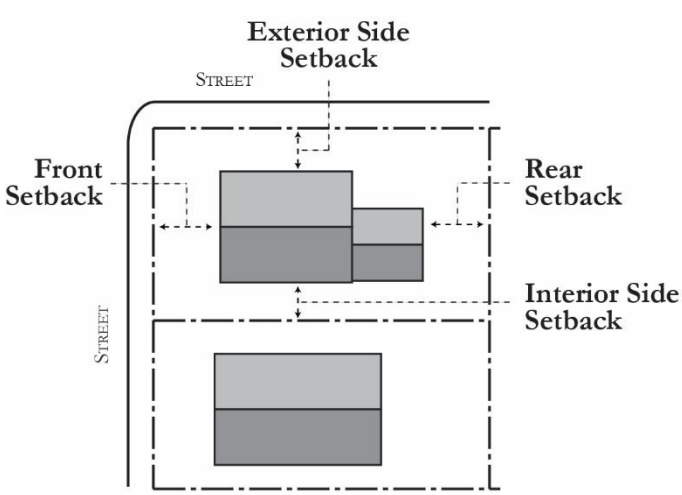

Attachment: Draft Zoning Code Public Review 02.04.2016 (1392 : Zoning Code Update)

B. Projections over Property Lines. Structures may not extend beyond a property line or into the public right-of-way, except when allowed with an Encroachment Permit.

C. Projections into Required Setback. Features of the primary structure on a lot may project into required setback areas as shown in Table 17.48-2, subject to the requirements of the Building Code. See Chapter 17.52 (Accessory Structures and Uses) for setback requirements that apply to accessory structures.

TABLE 17.48-2: ALLOWED PROJECTIONS INTO REQUIRED SETBACKS

Projecting Features	Maximum Projection into Required Setback	Minimum Distances from Property Lines
Cornices, eaves, canopies, and similar roof projections	Interior Side: 2 ft. Front, Rear, Exterior Side: 4 ft.	All property lines: 3 ft.
Bay windows, balconies, sills, fireplaces, chimneys, and similar wall projections [1]	All setbacks: 2 ft.	All property lines: 3 ft.
Open and unenclosed entry porches, stairways, fire escapes, landing places, patio, and similar entry features [2]	Front and Exterior Side: 4 ft. Rear: 6 ft. Interior Side: ½ of required setback	Interior side: 3 ft. Front: 10 ft.
Decks, 30 inches or less above grade	Interior Side and Rear: No maximum Front and Exterior Side: Not permitted	Interior side and rear: 3 ft.
Wheelchair ramps and similar features for the disabled	No maximum	No minimum

Notes:
[1] Projecting bay window may not exceed 60 percent of the width of the wall in which it is located.
[2] Ground floor only; maximum railing height 30 inches.
[3] Limited to 50 percent of the length of the average of the two sides of the structure.

D. Accessory Structures in Setback Areas. The following accessory structures and site improvements are permitted within required setback areas:

1. Trellis structures that provide support for plants and shade are allowed in all required setback areas if the structure does not exceed 10 feet in height, the structure roof remains permeable (roof members at least 12 inches apart), and the structure is open on at least three sides.

2. Planter boxes and masonry planters with a maximum height of 42 inches are allowed within all required setback areas.

Attachment: Draft Zoning Code Public Review 02.04.2016 (1392 : Zoning Code Update)

3. Screened mechanical equipment including hot water heaters and air conditioning units.
4. Pools and hot tubs are allowed within required rear setback areas provided a minimum 5-foot setback is maintained from all property lines.
5. Fire pits are allowed in required setback areas provided a minimum 5-foot setback is maintained from all property lines.
6. Children's play equipment, movable dog houses, movable trash enclosures, and similar moveable objects are allowed in all required setback areas.
7. Rain harvesting tanks that do not exceed 8 feet in height are allowed in required side and rear setback areas.

Note: Section D above clarifies structures allowed in minimum setback areas, and establishes new limitations on these allowed encroachments.

17.48.040 Floor Area and Floor Area Ratio

A. Floor Area Defined. Floor area means the sum of the horizontal areas of all floors of an enclosed structure, measured from the outside perimeter of the exterior walls.

B. Floor Area Calculation.

Note: Calculation of floor area no longer includes residential decks, decks on restaurants and hotels, basements not visible from the public right-of-way, and internal parking structures. The horizontal area for staircases in multi-story structures is counted once when calculating FAR.

1. Floor area includes all interior area below a roof and within:
   a. The outer surface of the exterior walls; or
   b. The centerlines of party walls separating buildings or portions thereof; or
   c. Lines drawn parallel to and two feet within the roof line of a carport.
2. Floor area includes the entire area in all enclosed structures without deduction for features such as interior walls or storage areas.
3. In the case of a multi-story building with a covered or enclosed stairways, stairwells or elevator shafts, the horizontal area of such features are counted only once at the floor level of their greatest area of horizontal extent. See Figure 17.48-3.

Attachment: Draft Zoning Code Public Review 02.04.2016 (1392 : Zoning Code Update)

FIGURE 17.48-3: FAR MEASUREMENT FOR STAIRWAYS

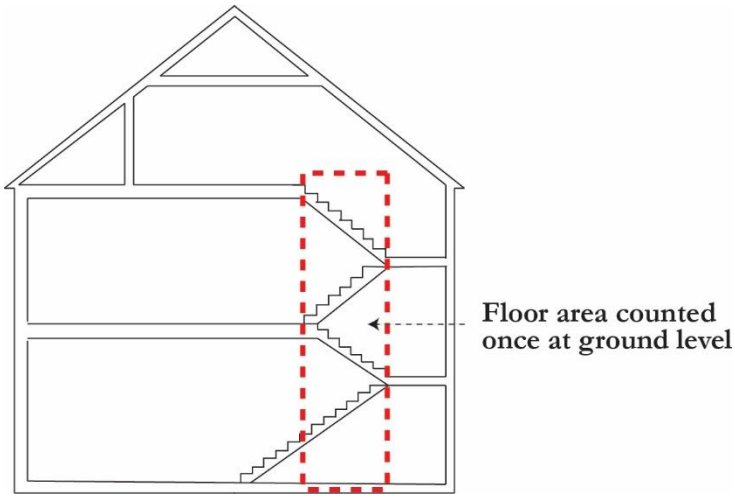

4. Interior area of a building with a floor-to-ceiling height of greater than 16 feet are counted twice in the floor area calculation.
5. The following features are included in the floor area calculation:
   a. All upper floor area greater than 4 feet in height, measured between the bottom of the upper floor and the top of the ceiling.
   b. All accessory structures other than a single building of 80 square feet or less in size, 8 feet or less in height, and without plumbing or electrical fixtures.
6. For all uses, the following features are excluded from the floor area calculation:
   a. Covered or uncovered decks, patios, trellises, and similar outdoor space which are open on at least three sides, not including carports.
   b. Bay windows, chimneys, and other similar wall projections.
   c. Up to 250 square feet of an enclosed garage on a lot 3,000 square feet or less.
   d. Underground parking garages not visible from a public street.
   e. Basements when all walls are below grade and not visible. Basements are included in calculations of required on-site parking to serve the use.
7. For non-residential uses, the following features are excluded from the floor area calculation:
   a. Outdoor improvements such as patios, decks, courtyards, outdoor dining areas, and other areas used by customers and employees. These features are included in calculations of required on-site parking to serve the use.

Attachment: Draft Zoning Code Public Review 02.04.2016 (1392 : Zoning Code Update)

b. Arcades, porticoes, and similar open areas that are located at or near street level and are accessible to the general public but are not designed or used as sales, display, storage, service, or production areas.

c. Quasi-public seating areas located in a privately owned shopping center which is open to all of the patrons of all of the businesses of the shopping center and which consists of a seating area or similar area where there are tables, chairs, benches or landscaping or other similar amenities.

C. Floor Area Ratio.

1. Floor area ratio (FAR) is calculated by dividing the total floor area of all buildings on a site as defined in Section B (Floor Area Calculation) above by the net parcel area.

2. Net parcel area excludes: a) any recorded easements to allow others to use the surface of the property for access to an adjacent property or other similar use, and b) any area under the high water mark that extends into a waterway.

Attachment: Draft Zoning Code Public Review 02.04.2016 (1392 : Zoning Code Update)

Chapter 17.52 - ACCESSORY STRUCTURES AND USES

Sections:

17.52.010 Purpose and Applicability
17.52.020 Accessory Structures
17.52.030 Accessory Uses

17.52.010 Purpose and Applicability

This chapter establishes requirements for accessory structures and uses in residential and non-residential zoning districts. These requirements do not apply to secondary dwelling units, which are addressed in Chapter 17.74 (Secondary Dwelling Units).

17.52.020 Accessory Structures

A. All Accessory Structures. The following requirements apply to accessory structures in all zoning districts.

1. Accessory structures shall be clearly incidental and subordinate to the primary structure on the same lot.
2. Accessory structures may not be located on a separate lot from the primary use to which it incidental and subordinate.
3. A Design Permit and a building permit are required for accessory structures with one or more of the following characteristics: an enclosed area of over 80 square feet, a height of over 8 feet, or plumbing or electrical fixtures.
4. Accessory structures shall be set back a minimum of 3 feet from primary structures and other accessory structures or as otherwise required by the California Building Code.
5. Accessory structures attached to a primary structure are considered a part of the primary structure and shall comply with all standards applicable to the primary structure.
6. Accessory structures may not be designed or used for human habitation, except for secondary dwelling units consistent with Section 17.74 (Secondary Dwelling Units).

B. Accessory Structures in Residential Zoning Districts.

1. **Development Standards**. Accessory structures in residential zoning districts shall comply with the development standards in Table 17.52-1 and in Figure 17.52-1.

Note: Minimum rear setback for accessory structures has been decreased from 8 feet in Chapter 17.15.140 of the existing Zoning Code to 4 feet in Table 17.52-1 below.

Attachment: Draft Zoning Code Public Review 02.04.2016 (1392 : Zoning Code Update)

TABLE 17.52-1: ACCESSORY STRUCTURE STANDARDS IN RESIDENTIAL ZONING DISTRICTS

	Single-Family Residential Zoning Districts	Multi-Family Residential Zoning Districts	Additional Standards
Height, Maximum			
Structure	15 ft.	15 ft.	Section 17.52.020.B.2
Top of Wall Plate	9 ft.	9 ft.	
Width, Maximum	21 ft. for detached garages; None for other accessory structures	None	
Setbacks, Minimum			Section 17.52.020.B.3
Front	40 ft. for detached garages; Same as primary structure for other accessory structures	Same as primary structure	
Side (interior and street)	3 ft.	3 ft.	
Rear	4 ft.	4 ft.	

FIGURE 17.52-1: DETACHED GARAGE STANDARDS IN RESIDENTIAL ZONING DISTRICTS

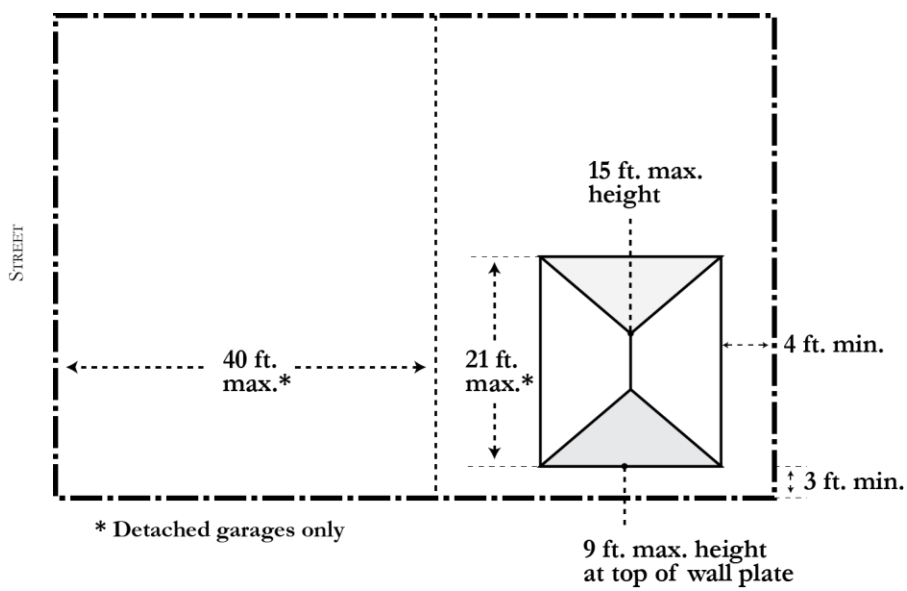

2. **Height Exception.** The Planning Commission may approve an exception to allow additional height if necessary to match the architectural style of the existing primary structure.

Attachment: Draft Zoning Code Public Review 02.04.2016 (1392 : Zoning Code Update)

Note: Allowance for an additional accessory structure in a required setback with an Administrative Permit in paragraph 3 below is new.

3. **Setback Exceptions.** One accessory structure permanently attached to the ground is allowed by-right in required side and rear setback areas if the structure is less than 8 feet in height, has 80 square feet or less of enclosed area, and has no plumbing or electrical fixtures. One additional accessory structure is allowed in required side and rear setback areas with an Administrative Permit.

4. **Driveway Standards.** The placement of detached garages shall allow for the design and location of driveways consistent with Chapter 17.76 (Parking and Loading).

5. **Nonconforming Garages**. An existing detached garage in a residential single-family zoning district that does not comply with development standards in Table 20.52-1 is legal nonconforming and may be repaired, renovated, or replaced provided that the nonconformity is not increased or exacerbated

C. Accessory Structures in Non-Residential Zones. Accessory structures in non-residential zoning districts are subject to the same development standards (e.g., height and setbacks) as primary structures in the applicable zoning district.

17.52.030 Accessory Uses

A. Residential Accessory Uses. The following requirements apply to accessory uses in residential zoning district.

1. Accessory uses shall be located on the same parcel as a residence and shall be clearly incidental and subordinate to the residence.

2. Accessory uses shall not change the character of the residential use. Examples of permitted accessory uses include home occupations and personal property sales (i.e., garage or yard sales).

B. Non-Residential Accessory Uses. The following requirements apply to accessory uses in non-residential zoning districts.

1. Accessory uses shall be a part of and clearly incidental and subordinate to the primary use to which it relates.

2. Accessory uses shall be located on the same parcel as the primary use to which it is incidental and subordinate, within the structure.

3. Accessory uses shall be customarily associated with the primary use to which it is incidental and subordinate. Examples of common non-residential accessory uses include ATMs, vending machines, newsstands, and personal service establishments (e.g., child day care, food services) intended to serve employees or customers and that are not visible from public streets.

Note: Conditional Use Permit requirement for vending machines in paragraph 4 below is new.

4. All vending machines are allowed through an amendment to the Conditional Use Permit for the primary use, or through a Conditional Use Permit if no discretionary approval was required for the primary use.

5. Accessory uses may not necessitate an increase in required number of parking spaces.

Attachment: Draft Zoning Code Public Review 02.04.2016 (1392 : Zoning Code Update)

Chapter 17.56 – ARCHAEOLOGICAL AND PALEONTOLOGICAL RESOURCES

Sections:

17.56.010 Purpose and Intent
17.56.020 Coastal Permit
17.56.030 Archaeological Survey Report
17.56.040 Environmental Assessment Requirement
17.56.050 Development Standards

Note: Chapter 17.11 in the existing Zoning Code has been revised to apply archaeological and paleontological resource protection measures as city-wide standards rather than an overlay zone.

17.56.010 Purpose and Intent

This chapter establishes standards to protect Capitola's archaeological and paleontological resources. New land uses and development, both public and private, shall be considered compatible with this purpose only where they incorporate all site planning and design features necessary to avoid or mitigate impacts to archaeological and paleontological resources.

17.56.020 Coastal Permit

Within the -CZ overlay zone, a Coastal Permit is required for all development proposed within 750 feet of a known archaeological or paleontological resource as identified through a survey report, or as shown on current Capitola resource maps or other available information.

17.56.030 Archaeological Survey Report

A. When Required. An archaeological survey report is required for any development located within:

1. An Archaeological/Paleontological Sensitivity Areas as shown in the Capitola Resource Map (Local Coastal Program, Map I-1);
2. 750 feet of a known archaeological resource; or
3. An area with a probability of containing archaeological resources, as determined through the planner's onsite investigation or other available information.

B. Report Preparation. The City will initiate the preparation of the survey report at the applicant's expense utilizing a qualified archaeologist selected by the Community Development Department. The survey report shall be submitted to and accepted by the City prior to deeming the application complete.

Attachment: Draft Zoning Code Public Review 02.04.2016 (1392 : Zoning Code Update)

C. Mitigation Plan

1. Where construction on, or construction impacts to, an identified archaeological or paleontological site cannot be avoided, as verified in the archaeological report prepared for the project, a mitigation plan shall be prepared for the project. Prior to deeming the application complete, the City shall approve the mitigation plan.
2. The mitigation plan shall include be recommended preservation measures in accordance with the guidelines of the State Office of Historic Preservation and the State of California Native American Heritage Commission.
3. The consulting archaeologist shall file the report with the State Office of Historic Preservation and where the plan contains recommendations that will impose any continuing restrictions or obligations on the property, an agreement approved by the City Attorney, binding the property's owner to the restrictions or requirements, shall be recorded. Such agreement shall list the official file number of the report and the location of the document.

D. Mitigation Measures. The recommended mitigation measures contained in the archaeological survey report shall be made a condition of approval.

E. Required Condition. Where a mitigation plan has been prepared for a proposed development, a condition of project approval shall be that:

1. The preservation measures shall be undertaken and completed prior to the issuance of building or grading permits, whichever comes first; or
2. Where appropriate, according to the recommendations contained in the mitigation plan, the preservation measures shall be undertaken concurrent with grading or other soil-disturbing activities and shall be undertaken in accordance with the mitigation plan, as a condition of the grading or building permit; and
3. The results of the preservation activities shall be compiled into a final report prepared by the archaeologist and submitted to the City prior to the issuance of building or grading permits. The City shall contract directly with the archaeologist to prepare the final report at the applicant's expense.

F. Report Standards. The report shall be prepared according to the report standards of the Society of Professional Archaeologists and must include, at a minimum, a field survey by the archaeologist, survey of available state resource information at the Northwest Regional Information Center of the California Archaeological Inventory, description of the site's sensitivity and any identified archaeological resources, appropriate levels of development on the site, and recommended mitigation measures. The report may be required to include additional information, according to the circumstances of the particular site.

G. Waiver of Report Requirement. Requirement to prepare an archaeological survey report may be waived by the Community Development Director under the following circumstances:

Attachment: Draft Zoning Code Public Review 02.04.2016 (1392 : Zoning Code Update)

1. A previous report was prepared for the site by a qualified archaeologist, as included on the City's list of archaeological consultants or as a member of the Society of Professional Archaeologists; and
2. The report clearly and adequately included the currently-proposed development site within the scope of its survey; or
3. The proposed development does not involve land clearing, land disturbance, or excavation into native soils.

17.56.040 Environmental Assessment Requirement

All development proposed on parcels with known archaeological resources, as identified through the survey report, shall be subject to environmental assessment under the California Environmental Quality Act (CEQA) Guidelines.

17.56.050 Development Standards

A. Design and Location. Development proposed on parcels with an identified archeological site shall be designed and located so as to avoid development on or impacts to the site. Alternative siting or location, reduction of project size, and other techniques shall be utilized where that will result in reduced impact to or non-disturbance of the archaeological site.

B. Mitigation Measures. Development on parcels with an archaeological site, as identified through an archaeological report prepared for the site, shall be subject to the mitigation measures of the archaeological survey report as conditions of approval, to be completed prior to the issuance of building or grading permits.

Attachment: Draft Zoning Code Public Review 02.04.2016 (1392 : Zoning Code Update)

Chapter 17.60 – FENCES AND WALLS

Sections:

17.60.010 Permit Requirements
17.60.020 Measurement of Fence and Wall Height
17.60.030 Height Limits
17.60.040 Fences Adjacent to Soquel Creek Pathway and Grand Avenue Walkway
17.60.050 Materials
17.60.060 Parking Lot Screening
17.60.070 Nonconforming Fences and Walls

17.60.010 Permit Requirements

A. Administrative Permit. An Administrative Permit is required to establish a new fence or wall consistent with the height, placement, and material standards in this chapter.

B. Design Permit. The Planning Commission may allow fences and walls that deviate from height, placement, and material standards with the approval of a Design Permit.

C. Building Permit. Fences and walls may require a building permit as required by California Building Code.

D. Encroachment Permit.

1. A fence in the public right-of-way requires Public Works Department approval of a Minor Revocable Encroachment Permit. See Municipal Code Section 12.56.060(A).
2. A wall in the public right of way requires Planning Commission approval of a Major Revocable Encroachment Permit. See Municipal Code Section 12.56.060(B).

17.60.020 Measurement of Fence and Wall Height

Note: Rules for the measurement of fence and wall height in this section are new.

A. Measurement of Height. The height of a fence or wall is measured from the finished grade at the base of the fence or wall to the top edge of the fence or wall.

B. Fences on Walls. If a fence is atop a wall, the total height is measured from the base of the wall.

C. Different Finished Grades. If the adjacent finished grade is different on opposite sides of a fence or wall, the height is measured from the side with the lowest finished grade to the highest point on the fence or wall.

Attachment: Draft Zoning Code Public Review 02.04.2016 (1392 : Zoning Code Update)

17.60.030 Height Limits

A. Maximum Height. The maximum height of fences and walls in all zoning districts is shown in Table 17.60-1 and Figure 17.60-1.

TABLE 17.60-1: FENCE AND WALL HEIGHT

Location	Maximum Height
Area from the front property line to the front facade of the primary structure	3 ½ ft.
Areas on a corner lot shown in Figure 17.60-1.	3 ½ ft.
All other locations	6 ft.
Alley	3 ½ ft.

.

FIGURE 17.60-1: FENCE AND WALL HEIGHT

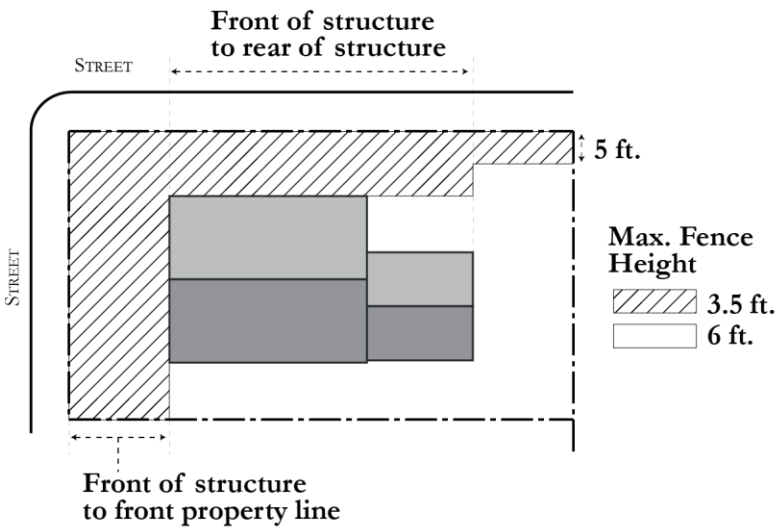

B. Decorative Features and Materials.

1. An additional 2 feet of fence height is permitted above a 6 foot high fence for lattice or other similar material that is at least 50 percent transparent.
2. Decorative arches and other similar features above an entry walkway may be up to 8 feet in height within a required front and exterior side setbacks.

Note: Allowance for decorative arches in paragraph 2 above is new. Requirement that fences not interfere with use of parking spaces in subsection C below is new.

Attachment: Draft Zoning Code Public Review 02.04.2016 (1392 : Zoning Code Update)

C. Use of Parking Spaces. Fences and walls may not be placed in a location that interferes with the use of a required on-site or street parking spaces.

17.60.040 Fences Adjacent to Soquel Creek Pathway and Grand Avenue Walkway

All fences adjacent to the pedestrian paths along the east side of Soquel Creek north of Stockton Avenue and along the Grand Avenue Walkway shall comply with the following standards:

A. Maximum height: 3 ½ feet.

B. Required material: wood, ornamental steel or iron, or other similar material.

C. Fences may not be constructed of solid material. Fences shall maintain public views through the use of widely-spaced vertical posts or other techniques.

17.60.050 Materials

Note: Material standards in this section are new.

A. Permitted Materials. Fences and walls shall be constructed of decorative masonry, ornamental steel or iron, or wood, and shall be of a complementary color and material with the primary building. Other materials may be permitted if the Community Development Director determines the design to be compatible with adjacent structures and its surrounding neighborhood.

B. Prohibited Materials.

1. Fences and walls may not be constructed of inappropriate materials such as sheet metal, vehicles, underground/above-ground tanks, garage doors, aluminum siding, corrugated tin, and other similar materials not specifically designed for use as fencing.
2. Barb-wire, razor wire, and electric fences are prohibited in all zoning districts. Chain link fences are prohibited in residential zoning districts, except for temporary use during construction with an active building permit.

17.60.060 Parking Lot Screening

Parking lots of six spaces or more shall be screened with a fence or wall as required by Subsection 17.76.060.I (Screening).

17.60.070 Nonconforming Fences and Walls

Note: Nonconforming fence and wall provisions in this section are new.

Attachment: Draft Zoning Code Public Review 02.04.2016 (1392 : Zoning Code Update)

A legally-established fence or wall that does not conform to current requirements in this chapter shall be removed or brought into compliance with this chapter if 50 percent or more of the lineal footage of the fence or wall is removed or replaced.

Attachment: Draft Zoning Code Public Review 02.04.2016 (1392 : Zoning Code Update)

Chapter 17.64 – ENVIRONMENTALLY SENSITIVE HABITAT AREAS

Sections:

17.64.010 Purpose
17.64.020 Applicability
17.64.030 General Standards
17.64.040 Soquel Creek and Lagoon
17.64.050 Soquel Creek and Escalona Gulch Monarch Butterfly Habitat Areas
17.64.060 Escalona Gulch Monarch Butterfly Habitat Areas

17.64.010 Purpose

This chapter establishes standards to protect and preserve environmentally sensitive habitat areas in Capitola consistent with Capitola's General Plan, Local Coastal Program (LCP), and the requirements of the Coastal Act.

17.64.020 Applicability

This chapter applies to the following environmentally sensitive habitat areas as identified in Capitola's LCP:

A. Soquel Creek and Lagoon

B. Soquel Creek Riparian Corridor

C. Noble Gulch Riparian Corridor

D. Tannery Gulch Riparian Corridor

E. Soquel Creek – Escalona Gulch Monarch Butterfly Habitat Areas

F. Escalona Gulch Monarch Butterfly Habitat Area

17.64.030 General Standards

The following standards apply to all environmentally sensitive habitat areas:

A. Impact Prevention. Development in areas adjacent to an environmentally sensitive habitat area shall be sited and designed to prevent impacts which would significantly degrade the area.

B. Long-Term Protection. Development shall be located, designed, and maintained to achieve the long-term protection of the environmentally sensitive habitat areas.

C. Prohibited Areas for Development. New development may not encroach into the waters of Soquel Creek or Lagoon, be sited within the root zone of riparian or butterfly host trees, or require the removal of trees in a Monarch butterfly habitat area which provide roosting habitat or wind protection.

Attachment: Draft Zoning Code Public Review 02.04.2016 (1392 : Zoning Code Update)

D. Minimum Setbacks.

1. Development may not encroach into required minimum setbacks from environmentally sensitive habitat areas as shown in Table 17.64-1 (Required Setbacks from Environmentally Sensitive Habitat Areas), except as allowed in subparagraph (2) below.

TABLE 17.64-1: REQUIRED SETBACKS FROM ENVIRONMENTALLY SENSITIVE HABITAT AREAS

Environmentally Sensitive Habitat Area	Minimum Setback
Soquel Creek and Lagoon	35 ft. from the western shoreline of Soquel Creek Lagoon [1]
Soquel Creek Riparian Corridor	35 feet from the outer edge of riparian vegetation. On the heavily developed east side of the lagoon and creek (from Stockton Avenue to Center Street) the setback requirement shall be measured from the bank of Soquel Creek. In no case may the setback be located on the west side of the pedestrian path.
Noble Gulch Riparian Corridor	35 feet from the outer edge of riparian vegetation
Tannery Gulch Riparian Corridor	50 feet from the outer edge or riparian and oak woodland vegetation

Notes:
[1] Does not apply to public facilities outside the coastal zone. Within the coastal zone, applies to public facilities unless otherwise specified in Section 30233 of the Coastal Act.

2. To allow for a minimum level of development on a physically constrained lot, the City may allow a reduction to the required minimum setback provided that the reduced setback does not have a significant adverse effect on the natural area.

E. Biological Study. The City shall contract with a qualified biologist at the applicant's expense to prepare a biological study that identifies the precise location of the environmentally sensitive habitat area and required setbacks, potential impacts on the habitat area, and measures to mitigate the impacts to the greatest extent possible.

F. Conservation Easements. If necessary and appropriate to protect natural areas, the City shall require a permanent conservation easements over portions of the property containing environmentally sensitive habitat areas. All environmentally sensitive habitat areas and their buffer zones shall be protected by conservation easements or deed restrictions.

G. Erosion Control and Water Quality.

1. All development shall conform to erosion control and water quality requirements consistent with federal, state, and local regulations. Within riparian areas, grading shall be minimized within the riparian setback area. Grading shall not be permitted to damage the roots of riparian trees or trees within butterfly habitat areas. Grading shall only take place during the dry season.

Attachment: Draft Zoning Code Public Review 02.04.2016 (1392 : Zoning Code Update)

2. During construction, erosion control measures shall be implemented, including limiting removal of vegetation, minimizing exposure of bare soils, replanting disturbed soils with suitable native species, controlling runoff, and preventing sedimentation from entering drainages. All areas outside the immediate construction areas shall not be disturbed. The City shall require measures for temporary drainage retention during construction, including mulching, erosion control seeding, and other measures as needed to prevent any sediment from reaching sensitive habitat areas.

H. Removal of Native Riparian Trees. Removal of native riparian trees within riparian corridors is prohibited unless it is determined by the Community Development Director that such removal is in the public interest by reason of good forestry practice, disease of the tree, or safety considerations.

I. Dead Trees in Riparian Corridors. Snags, or standing dead trees, shall not be removed from riparian corridors unless in imminent danger of falling. Removal shall be consistent with all applicable provisions of Capitola Municipal Code Chapter 12.12 (Community Tree and Forest Management). Any removed tree shall be replaced with a healthy young tree of an appropriate native riparian species.

J. Landscaping Plan. A landscaping plan shall be prepared for proposed developments that identifies the location and extent of any proposed modification to existing vegetation and the locations, kinds, and extent of new landscaping. The emphasis of such plans shall be on the maintenance and enhancement of native species, the removal of existing invasive species, and the enhancement of natural habitat. New invasive plant or tree species are not permitted, with the exception of species which positively contribute to Monarch butterfly habitat.

17.64.040 Soquel Creek and Lagoon

The following standards apply in the Soquel Creek and Lagoon area in addition to the standards in Section 17.64.030 (General Standards):

A. No New Development. No new development is permitted within the banks of Soquel Creek and Lagoon, except for public facilities outside of the coastal zone.

B. Division of Land. New divisions of land may be approved only if each new parcel contains adequate area outside the riparian or stream bank setback to accommodate new development.

17.64.050 Soquel Creek and Escalona Gulch Monarch Butterfly Habitat Areas

The following standard applies to both the Soquel Creek and the Escalona Gulch Monarch Butterfly Habitat Areas in addition to the standards in Section 17.64.030 (General Standards):

A. Permitted Construction Periods. Construction within or on properties contiguous to the designated butterfly groves shall be prohibited during fall and winter months when

Attachment: Draft Zoning Code Public Review 02.04.2016 (1392 : Zoning Code Update)

the Monarch butterflies are present. Removal or modification of trees within the groves shall not be permitted during these periods except when determined by the Community Development Director to be an emergency necessary to protect human life or property.

17.64.060 Escalona Gulch Monarch Butterfly Habitat Areas

The following standards apply to the Escalona Gulch Monarch Butterfly Habitat Area in addition to the standards in Section 17.64.030 (General Standards):

A. Permitted Development Location. On the Escalona Gulch properties (APN 036-141-26,27, & 28)) development shall be confined to Lots 2, 3 and 4 shown on the Escalona Gulch Monarch Butter Habitat Area Map maintained on file in the office of the City Clerk.

B. Maximum Floor Area and Building Coverage. Total building floor area shall be limited to 6,000 square feet and building coverage shall be limited to 4,000 square feet. Buildings shall be located and designed so that they do not have a significant adverse impact on the Monarch butterfly habitat.

C. Additional Driveway Area. Up to an additional 600 square feet of footprint for a driveway may be allowed if a redesigned site plan with fewer or relocated buildings results in reduced impacts to the Monarch grove habitat.

D. Conservation Easement. Conservation easements shall be established on lands outside the identified roadway and building envelopes where development and tree removal is prohibited. The easement shall also establish that modifications to the understory including trimming and alteration must be reviewed by a qualified arborist and Monarch butterfly expert and approved by the Community Development Director. The easement shall be held by a government agency or organization authorized to monitor and enforce easement restrictions.

E. Landscaping. Landscaping at future homesites shall be limited to areas within identified building envelopes. Shrubs which flower in the early fall and could provide a good source of flower nectar for the butterflies should be planted based on a list of landscape suggestions written by a qualified Monarch butterfly biologist.

F. Butterfly Monitoring.

1. Due to lack of quantified data base and some disagreement among butterfly specialists, microclimatic measurements shall be taken before and after construction to help develop a data base regarding environmental parameters associated with butterfly behavior. Such monitoring shall be funded by the applicant and be conducted by a qualified Monarch butterfly expert.

2. Monitoring shall include measurements of wind direction and velocity, temperature and humidity profiles and light intensity. Monitoring shall be conducted for three years after final construction on the property. Measurements of height, diameter, and age of cluster trees shall be taken the first year.

Attachment: Draft Zoning Code Public Review 02.04.2016 (1392 : Zoning Code Update)

G. Tree Protection.

1. Development shall be located and designed to avoid removal of large trees. Large trees to be protected immediately adjacent to buildings should be evaluated by an arborist to assure that they will not pose a hazard in the future.
2. Trees and vegetation within the Escalona Drive right-of-way, but outside any planned paved area, shall be retained in their existing condition
3. Trees and ground vegetation adjacent to the building envelopes shall not be trimmed or altered in any way unless reviewed by a qualified arborist and Monarch butterfly expert and approved by the Community Development Director.
4. Trees which are seriously diseased or hazardous should be trimmed or removed during the building process, rather than having to disturb the habitat during some future winter season when falling limbs are the most likely to occur. If removal is deemed necessary, replanting shall be implemented in conjunction with the site replanting program.
5. Trees removed for construction shall be replaced based on a tree replanting program developed in consultation with a qualified Monarch butterfly expert and the California Department of Fish and Game. The trees shall be sited in strategic locations as identified by the replanting program.
6. Barrier fencing shall be installed around large trees, especially cluster trees, for protection during construction.

H. Structure Height. The City shall limit structure heights as needed to prevent shading of cluster sites.

I. Wood-Burning Fireplaces. Wood-burning fireplaces shall be prohibited in structures built on site where Monarch butterflies may be disturbed due to chimney smoke.

J. Construction Involving Heavy Equipment. No construction involving heavy equipment that may bump into the cluster trees or produce heavy plumes of exhaust smoke is permitted during the months in which the Monarch butterflies are in residence (October 1st to March 1st).

Attachment: Draft Zoning Code Public Review 02.04.2016 (1392 : Zoning Code Update)

Chapter 17.68 – GEOLOGICAL HAZARDS

Sections:

17.68.010 Purpose and Applicability
17.68.020 Geologic/Engineering Report
17.68.030 Shoreline Protection Measures
17.68.040 Development in Bluff and Cliff Areas

Note: This chapter carries forward requirements for the Geologic Hazards overlay zone in Chapter 17.48 of the existing Zoning Code as citywide standards that apply wherever geological hazards may be present. Existing requirements in Chapter 17.48 that are not applicable in Capitola (e.g., earthquake fault rupture zones) or that do not apply as citywide standards have been removed.

17.68.010 Purpose and Applicability

This chapter establishes standards for development in areas with geological hazards, including beach, shoreline, and bluff areas.

17.68.020 Geologic/Engineering Report

A. When Required. A geologic/engineering report shall be prepared for the following:

1. Developments located on a beach, including shoreline protective measures. "Shoreline protective measures" includes the installation of any structure or material for the purpose of protecting a structure, road, utility or transmission line in an area where coastal process operate. Shoreline protective measures include but not limited to riprap or a seawall.
2. Any blufftop or cliff development which is proposed within 200 feet of the cliff edge. In specific areas of known geological stability or where adequate protective devices already exist, a smaller area of analysis may be designated. The City may designate a greater area of analysis or exclude development entirely in areas of known high instability.
3. In areas determined by the Community Development Director, the Public Works Director, the Building Inspector, or the Planning Commission to have a landslide potential.
4. Any development built on a slope in excess of 30 percent.
5. Other areas with potential geologic hazards as determined by the Planning Commission.

B. Contents of Geologic/Engineering Reports.

Attachment: Draft Zoning Code Public Review 02.04.2016 (1392 : Zoning Code Update)

1. All geologic/engineering reports shall be prepared according to the guidelines for practice issued by the California Geological Survey, specifically, No. 37 Guidelines for Preparing Engineering Geological Reports and Coastal Commission Guidelines for Bluff Top Development.

2. Geological/engineering reports shall be prepared by a registered geologist or professional engineer with expertise in soils or foundations engineering, or by a certified engineering geologist.

C. Expert Review. The City may employ, at the applicant's expense, an appropriate expert to evaluate the adequacy of the report.

D. Report Noted on Subdivision Maps. All geologic/engineering reports prepared in conjunction with an application to subdivided property shall be noted on the map as provided in Government Code Section 66434(f).

17.68.030 Shoreline Protection Measures

A. Primary Structures. Shoreline protection structures may be permitted only when necessary to protect existing development other than accessory structures.

B. Beach Erosion. Shoreline protection structures may be permitted to protect public beaches in danger from erosion only when:

1. Nonstructural solutions (e.g., artificial beach nourishment, relocation of structures) are infeasible;

2. Structure design eliminates or mitigates adverse impacts on local shoreline sand supply, public access, marine habitats and paleontological resources; and

3. Vertical beach access is provided where feasible.

17.68.040 Development in Bluff and Cliff Areas

A. Permitted Location. Bluff and cliff top development is permitted only when the development is designed to assure stability and structural integrity for the expected life of the project (at least fifty years).

B. Prohibited Impacts. Cliff top development, including storm runoff, foot traffic, grading, and irrigation, may not create nor contribute significantly to erosion problems or geological instability of the site or surrounding areas.

Attachment: Draft Zoning Code Public Review 02.04.2016 (1392 : Zoning Code Update)

Chapter 17.72 LANDSCAPING

Sections:

17.72.010 Purpose
17.72.020 Applicability
17.72.030 Water Efficient Landscape Design and Installation Ordinance
17.72.040 Landscape Plans
17.72.050 Required Landscape Areas
17.72.060 Landscape Standards

17.72.010 Purpose

This chapter establishes landscaping standards to enhance the aesthetic appearance of developed areas in Capitola and to promote the efficient use of water resources.

17.72.020 Applicability

Note: Thresholds for additions to existing development in Subsections B and C are new. Existing Zoning Code Section 17.97.010 states standards apply to new construction and to remodels of commercial, industrial, multi-family, and planned development.

The following projects shall comply with the requirements of this chapter:

A. Construction of new primary structures.

B. Additions that increase the floor area of a single-family dwelling by 10 percent or more.

C. Additions that increase the floor area of a multi-family or non-residential structure by 3,000 square feet or more.

17.72.030 Water Efficient Landscape Design and Installation Ordinance

Note: This section is new as required by State law.

In addition to the requirements of this chapter, all applicable development in Capitola shall also comply with the Model Water Efficient Landscaping Ordinance prepared by the California Department of Water Resources (DWR), when required by the California Water Conservation in Landscaping Act (Government Code Section 65591 et seq.) If conflicts occur between the Model Water Efficient Landscaping Ordinance and the Zoning Code, the more restrictive shall control.

17.72.040 Landscape Plans

A. Landscape Plan Required. Projects subject to the requirements of this chapter shall submit a landscape plan as part of planning permit applications (e.g., Design Permit applications) and subsequent building permit applications.

Attachment: Draft Zoning Code Public Review 02.04.2016 (1392 : Zoning Code Update)

B. Required Contents. Landscape plans shall include the following features and information:

1. Site boundaries.
2. Existing conditions on the property, including contours and existing structures.
3. Structures immediately adjacent to the property.
4. New structures and improvements proposed as part of the development project.
5. Existing landscaping, trees, and vegetation to be retained specifying plant location, species, and size. Details of existing trees shall also include tree diameter measured 48 inches above existing grade and outer limit of tree canopy.
6. New landscaping proposed as part of the development project specifying plant location, species, and size.
7. Irrigation plan specifying the location, type, and size of all components of the irrigation system.
8. Proposed grading.
9. Additional information as determined by the Community Development Department to demonstrate compliance with the requirements of this chapter.

C. Review and Approval. The Community Development Department shall review all landscape plans to verify compliance with this chapter. Landscape plans shall be approved by the review authority responsible for approving the planning permits required for the proposed project.

D. Changes to Approved Landscape Plans.

1. Substantial modifications to an approved landscape plan shall be allowed only by the review authority which approved the landscape plan.
2. The Community Development Director may approve minor modifications to a landscape plan previously approved by the Planning Commission. Minor modifications are defined as changes to a landscape plan that do not alter the general design character of the landscaped area or alter a feature of the landscaped area specifically required by the Planning Commission.

17.72.050 Required Landscape Areas

A. Residential Zoning Districts.

1. All required front and street side setback areas, excluding areas required for access to the property, shall be landscaped and maintained. See Figure 17.72-1.
2. Landscaping may consist of any combination of living plants, such as trees, shrubs and grass or related natural features, such as rock, stone, or mulch. Decorative hardscape featuring pervious materials is permitted within required landscaping areas.

Attachment: Draft Zoning Code Public Review 02.04.2016 (1392 : Zoning Code Update)

B. Non-Residential Zoning Districts.

1. The minimum landscaped area on a site is shown in Table 17.72-1.
2. In the MU-V and MU-N zoning districts, outdoor dining areas, courtyards, and other similar quasi-public areas may count toward landscaping requirements. In all other zoning districts these areas may not count toward landscaping requirements.

FIGURE 17.72-1: REQUIRED LANDSCAPE AREA IN R-1 ZONING DISTRICT

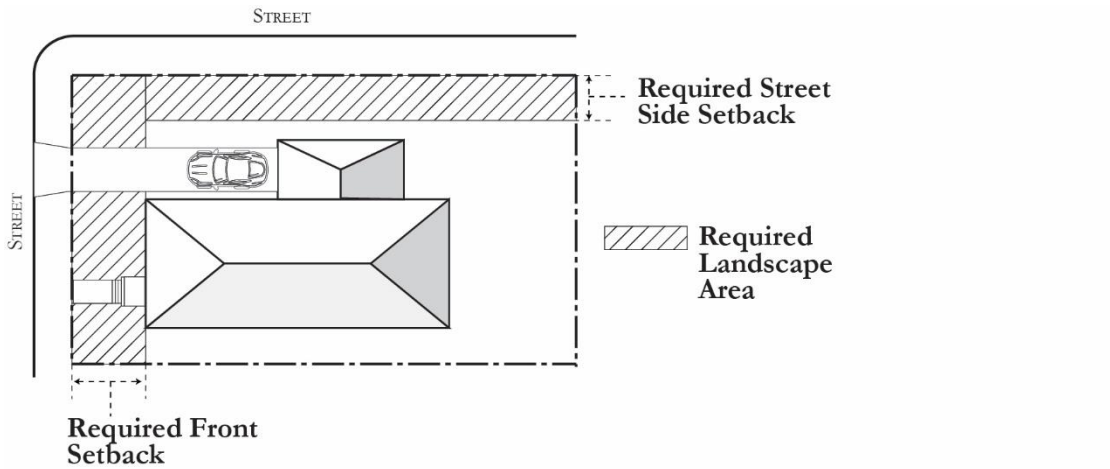

TABLE 17.72-1: MINIMUM LANDSCAPED AREA IN NON-RESIDENTIAL ZONING DISTRICTS

Zoning Districts	Minimum Landscaped Area
MU-V, MU-N, C-R, C-C, CF	5%
I	None
P/OS, PD, VA	As determined by the permit approval process

3. Except in the I zoning district, all required front and street side setback areas shall be landscaped, excluding areas required for access to the property and public or quasi-public open space such as courtyards and outdoor seating.

C. Visitor Serving Properties. Minimum required landscaping for certain visitor serving properties are shown in the Table 17.72-2.

TABLE 17.72-2: MINIMUM LANDSCAPED AREA FOR VISITOR SERVING PROPERTIES

Property	Minimum Landscaped Area
Rispin Site	75% as either landscaped areas in developed areas of the site, or unlandscaped natural areas in areas subject to conservation easements
Shadowbrook Restaurant Parcel and visitor-serving El Salto and Monarch Cove parcels	50% landscaped area or undeveloped open space

Attachment: Draft Zoning Code Public Review 02.04.2016 (1392 : Zoning Code Update)

17.72.060 Landscape Standards

A. General Standards. The following standards apply within all zoning districts.

1. **Plant Selection.** A minimum of 90 percent of plants and trees shall be drought-tolerant as defined by the Water Use Classification of Landscape Species (WUCOLS.) Native plans adapted to the local climate are preferred.

2. **Turf Lawns.**

   a. Turf areas shall be limited to 25 percent of the landscaped area. The Planning Commission may approve larger areas if the lawn area provides functional open space.

   b. Drought-tolerant grass species shall be used exclusively.

   c. Turf shall not be used on berms, slopes, or median islands where runoff is a problem.

3. **Slopes.** Turf and high water use plans shall not be planted on berms and slopes greater than 25 percent.

4. **Plant Groupings.** Where irrigation is proposed, plants shall be grouped in separate hydrozones (i.e., plants within each irrigation valve area shall have the same watering requirements).

5. **Water Features.** Decorative water features (e.g., fountains, ponds, waterfalls) must be approved by the Planning Commission and shall have recirculating water systems.

6. **Watering Times.** Watering shall start after eight p.m. and end before ten a.m.

7. **Public Safety.** Plant species shall be selected and located so that at maturity they do not interfere with pedestrian, bicycle, or vehicular circulation and do not conflict with overhead lights, or utility lines.

> **Note:** Watering times in existing Zoning Code is six p.m. to ten a.m. changed to eight p.m. to ten a.m. as suggested by the Water District.

B. Irrigation and Water Efficiency. Irrigation systems shall be designed to avoid runoff, low head drainage, overspray, and other similar conditions where water flows outside of landscaped areas. Irrigation systems shall feature the following equipment:

1. Irrigation systems shall meet a minimum irrigation efficiency of 75 percent.

2. Separate landscape water meters for landscape areas exceeding 5,000 square feet.

3. Irrigation controllers capable of percent adjustment, multiple programming, and rain sensor.

4. Overhead sprays shall have a precipitation rate of no more than 0.75 inches per hour.

Attachment: Draft Zoning Code Public Review 02.04.2016 (1392 : Zoning Code Update)

5. Separated valves and circuits based on water use and sun exposure. Separate valves for turf and non-turf and berm areas are required.
6. Sprinkler heads and emitters selected for proper area coverage, application rate, operation pressure, adjustment capability, and ease of maintenance.
7. Rain-sensing override devices are required for all irrigation systems.
8. Drip or bubble irrigation are required for all trees.
9. State-approved back flow prevention devices shall be installed on all irrigation systems

Note: Standards for irrigation efficiency in paragraph 1 and overhead spray precipitation rate in paragraph 4 are new as suggested by the water District.

C. Timing of Installation. Landscaping systems shall be installed prior to final building permit inspection or certification of occupancy.

D. Maintenance.

1. **General.** Landscape areas shall be maintained in a neat and healthful condition at all times.
2. **Mulch.** Mulch shall be periodically added to the soil surface in all landscape areas.
3. **Replacement of Dead or Dying Plants.** Plants that are dead or severely damaged or diseased shall be replaced by the property owner.
4. **Removal of Landscaping.** Any removed mature landscaping shall be replaced with landscaping of similar size and maturity as that which was removed. Trees shall be replaced in accordance with the City's Tree Ordinance, Municipal Code Section 12.12
5. **Irrigation Systems.** Irrigation systems shall be maintained in a fully functional manner as approved by the City and required by this chapter. Watering schedules should be adjusted periodically to reflect seasonal variations.

Attachment: Draft Zoning Code Public Review 02.04.2016 (1392 : Zoning Code Update)

Attachment: Draft Zoning Code Public Review 02.04.2016 (1392 : Zoning Code Update)

Chapter 17.74 – SECONDARY DWELLING UNITS

Sections:

17.60.010 Purpose
17.60.020 Permitted Location
17.60.030 Required Permits
17.60.040 Design and Development Standards
17.60.050 Findings
17.60.060 Deed Restrictions
17.60.070 Incentives

17.74.010 Purpose

This chapter establishes standards for the location and construction of secondary dwelling units consistent with Government Code Section 65852.2. These standards are intended to allow secondary dwelling units as a form of affordable housing in Capitola while maintaining the character and quality of life of residential neighborhoods.

17.74.020 Permitted Location

Note: This section allows secondary dwelling units in the R-1, RM, MU-V and MU-N zoning districts on parcels occupied by a single-family dwelling. The existing Zoning Code allows secondary dwelling units only in the R-1 zoning district.

Secondary dwelling units are permitted in the Single-Family Residential (R-1), Multi-Family Residential (RM), Village Mixed Use (MU-V) and Neighborhood Mixed Use (MU-N) zoning districts.

17.74.030 Required Permits

A. Administrative Permit. Secondary dwelling units consistent with Section 17.74.040 (Design and Development Standards) are allowed with an Administrative Permit.

B. Design Permit and Conditional Use Permit.

Note: Paragraph 1 below prohibits deviations from certain design and development standards. Section 17.99.040 in the existing Zoning Code allows for deviation from all design and development standards with a Conditional Use Permit and Design Permit.

1. With the approval of a Design Permit and a Conditional Use Permit, the Planning Commission may allow secondary dwelling units that deviate from the standards in Subsections D (Unit Size) through K (Open Space and Landscaping) in Section 17.74.040.

   To approve a Conditional Use Permit for a secondary dwelling unit, the Planning Commission must make all of the findings in Section 17.74.050 (Findings).

Attachment: Draft Zoning Code Public Review 02.04.2016 (1392 : Zoning Code Update)

17.74.040 Design and Development Standards

Note: The requirement that the property owner occupy either the primary residence or the secondary dwelling unit in Section 17.99.060 of the existing Zoning Code is removed from this section.

A. Minimum Lot Size. Secondary dwelling units are permitted only on parcels 5,000 square feet or greater.

B. Primary Residence on Parcel. A secondary dwelling unit is permitted only when a primary single-family dwelling is present on a parcel or is constructed concurrently with the secondary dwelling unit.

C. Maximum Number per Parcel. Only one secondary dwelling unit is allowed on a single lot.

D. Unit Size. Table 17.74-1 shows the maximum permitted floor area for a secondary dwelling unit, based on the size of the parcel in which it is located.

TABLE 17.74-1: MAXIMUM SECONDARY DWELLING UNIT SIZE

Parcel Size	Maximum Floor Area
5,000 – 7,500 sq. ft.	500 sq. ft.
7,501 – 10,000 sq. ft.	640 sq. ft.
Greater than 10,000 sq. ft.	800 sq. ft.

E. Maximum Floor Area Ratio. The combined floor area ratio of a lot with a primary residence and a secondary dwelling unit shall not exceed 0.60

F. Height and Setback Standards.

Note: Table 17.80-2 allows two-story secondary dwelling units and requires a minimum 4-foot rear setback from single-story secondary dwelling units. Section 17.99.060.5 in the existing Zoning Code prohibits two-story secondary dwelling units and requires a minimum 8-foot rear setback from single-story secondary dwelling units.

1. Height and setbacks standards for secondary dwelling units are shown in Table 17.74-2.
2. The Planning Commission may allow a detached secondary dwelling unit to exceed the height limits in Table 17.74-2 to accommodate a roof design that matches special roof features of the primary residence. Such a height exception requires Planning Commission approval of a Conditional Use Permit.

Attachment: Draft Zoning Code Public Review 02.04.2016 (1392 : Zoning Code Update)

TABLE 17.80-2: SECONDARY DWELLING UNIT SETBACK AND HEIGHT STANDARDS

	Type of Secondary Dwelling Unit	
	Detached	**Attached**
Setbacks, Minimum		
Interior Side	5 ft.	Same as required for primary residence
Exterior Side	Same as required for primary residence	
Rear	One story unit: 4 ft. Two story unit: 10 ft.	
Front	Same as required for primary residence	
Height, Maximum		
One story	One story unit: 15 ft. [1] Two story unit: 22 ft.	Height of primary residence or minimum permitted in zoning district, whichever is less

Notes:
[1] Maximum height when 4 – 10 feet from property line is 12 feet.

G. Doors and Windows.

1. The entrance to a detached secondary dwelling unit shall face the interior of the parcel unless the secondary dwelling unit is directly accessible from an alley or a public street.
2. Openings (e.g., doors and windows) on exterior walls that are closest to and face adjacent residentially-zoned properties shall be designed to minimize privacy impacts and maintain access to light and ventilation on adjacent properties.

H. Parking. Off-street parking requirements for a secondary dwelling unit shall be based on the combined square footage of the primary residence and the secondary dwelling unit.

I. Alley Orientation.

1. When a secondary dwelling unit is adjacent to an alley, the secondary dwelling unit shall be oriented toward the alley with the front access door and windows facing the alley. The Planning Commission may allow an exception to this requirement with a Conditional Use Permit upon finding that an alley orientation is not feasible due to unique circumstances on the property.
2. Parking accessed from an alley shall maintain a 24-foot back-out area, which may include the alley.

Attachment: Draft Zoning Code Public Review 02.04.2016 (1392 : Zoning Code Update)

J. Design. The design of the secondary dwelling unit shall relate to the design of the primary residence by use of the similar exterior wall materials, window types, door and window trims, roofing materials and roof pitch.

K. Open Space and Landscaping. The site plan shall provide open space and landscaping that is useful for both the secondary dwelling unit and the primary residence. Landscaping maintain privacy and provide screening for adjacent properties.

L. Mobile Units. Vehicles and trailers of any kind, with or without wheels, are prohibited as secondary dwelling units.

M. Building Code Compliance. The secondary dwelling unit shall meet the requirements of the Uniform Building Code.

17.74.050 Findings

To approve a Conditional Use Permit for a secondary dwelling unit, the Planning Commission shall find that:

A. The exterior design of the secondary dwelling unit is compatible with the existing residence on the lot through architectural use of building forms, height, construction materials, colors, landscaping, and other methods that conform to acceptable construction practices.

B. The exterior design is in harmony with, and maintains the scale of, the neighborhood.

C. The secondary dwelling unit will not create excessive noise, traffic, or parking congestion.

D. The property fronts on an adequate water main and sewer line each with the capacity to serve the secondary dwelling unit.

E. The site plan provides adequate open space and landscaping that is useful for both the secondary dwelling unit and the primary residence. Open space and landscaping provides for privacy and screening of adjacent properties.

F. The location and design of the secondary dwelling unit maintains a compatible relationship to adjacent properties and does not significantly impact the privacy, light, air, solar access, or parking of adjacent properties.

G. The secondary dwelling unit generally limits the major access stairs, decks, entry doors, and major windows to the walls facing the primary residence, or to the alley if applicable. Windows that impact the privacy of the neighboring side or rear yard have been minimized. The design of the secondary dwelling unit relates to the design of the primary residence and does not visually dominate it or the surrounding properties.

H. The site plan is consistent with physical development policies of the General Plan, any area plan or specific plan, or other City policy for physical development. If located in the coastal zone, the site plan is consistent with policies of the Local Coastal Plan.

Attachment: Draft Zoning Code Public Review 02.04.2016 (1392 : Zoning Code Update)

I. The orientation and location of buildings, structures, open spaces and other features of the site plan are such that they maintain natural resources including significant trees and shrubs to the extent feasible and minimize alteration of natural land forms.

J. The site plan protects views along the ocean and of scenic coastal areas. Where appropriate and feasible, the site plan restores and enhances the visual quality of visually degraded areas.

17.74.060 Deed Restrictions

A. Before obtaining a building permit for a secondary dwelling unit, the property owner shall file with the County Recorder a declaration of restrictions containing a reference to the deed under which the property was acquired by the current owner. The deed restriction shall state that:

1. The secondary dwelling unit may not be sold separately.
2. The secondary dwelling unit is restricted to the approved size.

B. The above declarations are binding upon any successor in ownership of the property. Lack of compliance shall be cause for code enforcement and/or revoking the City's approval of the secondary dwelling unit.

C. The deed restriction shall lapse upon removal of the secondary dwelling unit.

17.74.070 Incentives

A. Fee Waivers for Affordable Units.

1. The City may waive development fees for secondary dwelling units that will be rented at levels affordable to low or very low income households.
2. Applicants of affordable secondary dwelling units shall record a deed restriction limiting the rent to low or very low-income levels prior to issuance of a building permit.
3. Landlords of secondary dwelling units shall be relieved of any affordability condition upon payment of fees in the amount previously waived as a result of affordability requirements, subject to an annual consumer price index increase commencing with the date of application for building permit.

B. Historic Properties. The Planning Commission may allow exceptions to design and development standards for secondary dwelling units proposed on a propriety that contains a Historic Resource as defined in Chapter 17.84 (Historic Preservation). To allow such an exception, the Planning Commission shall approve a Conditional Use Permit and find that the exception is necessary to preserve the architectural character of the primary residence.

Attachment: Draft Zoning Code Public Review 02.04.2016 (1392 : Zoning Code Update)

Chapter 17.76 – PARKING AND LOADING

Sections:

17.76.010 Purpose
17.76.020 Applicability
17.76.030 Required Parking Spaces
17.76.040 General Requirements
17.76.050 On-site Parking Alternatives
17.76.060 Parking Design and Development Standards
17.76.070 Parking Lot Landscaping
17.76.080 Bicycle Parking
17.76.090 On-site Loading
17.76.100 Shuttle Program Parking

17.76.010 Purpose

This chapter establishes on-site parking and loading requirements in order to:

A. Provide a sufficient number of on-site parking spaces for all land uses.

B. Provide for functional on-site parking areas that are safe for vehicles and pedestrians.

C. Ensure that parking areas are well-designed and contribute to a high-quality design environment in Capitola.

D. Allow for flexibility in on-site parking requirements to support a multi-modal transportation system and sustainable development pattern.

E. Ensure that on-site parking areas do not adversely impact land uses on neighboring properties.

17.76.020 Applicability

A. New Structures and Uses. On-site parking and loading as required by this chapter shall be provided anytime a new structure is constructed or a new land use is established.

B. Replacing Existing Uses.

1. **Mixed Use Village Zoning District.**

   a. Where an existing residential use is changed to a commercial use in the Village Mixed Use (MU-V) zoning district, parking shall be provided for the full amount required by the commercial use. No space credit for the previous use may be granted.

Attachment: Draft Zoning Code Public Review 02.04.2016 (1392 : Zoning Code Update)

b. In all other changes of use in the Village Mixed Use (MU-V) zoning district, additional parking is required to accommodate the incremental intensification of the new use. Additional parking is not required to remedy parking deficiencies existing prior to the change in use.

2. **Other Zoning Districts.** Where an existing use is changed to a new use outside of the Village Mixed Use (MU-V) zoning district, additional parking is required to accommodate the incremental intensification of the new use. Additional parking is not required to remedy parking deficiencies existing prior to the change in use.

C. Expansions and Enlargements.

1. **Nonresidential Use.** Where an existing structure with a nonresidential use is expanded or enlarged, additional parking is required to serve only the expanded or enlarged area.

2. **Residential Use.** For an existing structure with a residential use, the full amount of parking to serve the use is required when the floor area is increased by more than ten percent.

17.76.030 Required Parking Spaces

A. Mixed Use Zoning Districts. All land uses in the Village Mixed Use (MU-V) and Neighborhood Mixed Use (MU-N) zoning districts shall provide the minimum number of on-site parking spaces as specified in Table 17.76-1. Required parking for uses not listed in Table 17.76-1 shall be the same as required for land uses in other zoning districts as shown in Table 17.76-2.

Note: Required parking for in the MU-N zoning district in Table 17.76-1 is less than required by the existing Zoning Code. Reduced parking requirements reflect ability for residents in adjacent neighborhoods to walk to destinations in the MU-N zoning district.

TABLE 17.76-1: REQUIRED ON-SITE PARKING IN MIXED USE ZONING DISTRICTS

Land Uses	Number of Required Parking Spaces	
	Village Mixed Use (MU-V)	Neighborhood Mixed Use (MU-N)
Retail	1 per 240 sq. ft.	1 per 400 sq. ft.
Eating and Drinking Establishments		
Bars and Lounges	1 per 60 sq. ft. of floor area for dining; 1 per 240 sq. ft. for all other floor area	1 per 75 sq. ft.

Attachment: Draft Zoning Code Public Review 02.04.2016 (1392 : Zoning Code Update)

Restaurants and Cafes	1 per 60 sq. ft. of floor area for dining 1 per 240 sq. ft. for all other floor area	1 per 400 sq. ft.
Take-Out Food and Beverage	1 per 240 sq. ft.	1 per 400 sq. ft.
Personal Services	1 per 240 sq. ft.	1 per 400 sq. ft.
Hotels		
With more than 20 guest rooms	As determined by a parking demand study	As determined by a parking demand study
With 20 or less guest rooms	1 per guest room plus additional spaces as required by the Planning Commission	1 per guest room plus additional spaces as required by the Planning Commission

B. Other Zoning Districts. Land uses in zoning districts other than the mixed use zoning districts shall provide a minimum number of on-site parking spaces as specified in Table 17.76-2.

TABLE 17.76-2: REQUIRED ON-SITE PARKING IN OTHER ZONING DISTRICTS

Land Uses	**Number of Required Parking Spaces**
Residential Land Uses	
Duplex Homes	2 per unit, 1 covered
Elderly and Long Term Care	1 per six beds plus 1 per 300 sq. ft. of office and other nonresidential areas
Group Housing (includes single-room occupancy)	1 per unit plus 1 guest space per 6 units
Mobile Home Parks	1 per unit plus 1 per office
Multi-Family Dwellings	2.5 per unit, 1 covered
Residential Care Facilities, Small	0.5 per bed plus 1 per 300 sq. ft. of office and other nonresidential areas
Residential Care Facilities, Large	0.5 per bed plus 1 per 300 sq. ft. of office and other nonresidential areas
Secondary Dwelling Units	As required by the combined floor area with the primary residence
Single-Family Dwellings	1,500 sq. ft. or less: 2 per unit 1,501-2,000 sq. ft.: 2 per unit, 1 covered 2,001-2,600 sq. ft.: 3 per unit, 1 covered 2,601 sq. ft. or more: 4 per unit, 1 covered

Attachment: Draft Zoning Code Public Review 02.04.2016 (1392 : Zoning Code Update)

Public and Quasi-Public Land Uses	
Community Assembly	1 per 3 fixed seats, or 1 per 40 sq. ft. of assembly area for uses without fixed seats
Cultural Institutions	As determined by a parking demand study
Day Care Centers	1 per 400 sq. ft. of floor area used for daycare and 1 per employee
Government Offices	1 per 300 sq. ft.
Home Day Care, Large	1 per non-resident employee
Home Day Care, Small	None beyond minimum for residential use
Medical Offices and Clinics	1 per 300 sq. ft.
Parks and Recreational Facilities	As determined by a parking demand study
Public Safety Facilities	As determined by a parking demand study
Schools, Public or Private	2 per classroom
Commercial Land Uses	
Banks and Financial Institutions	1 per 300 sq. ft.
Business Services	1 per 300 sq. ft.
Commercial Entertainment and Recreation	1 per 3 fixed seats, or 1 per 40 sq. ft. of assembly area for uses without fixed seats
Eating and Drinking Establishments	
Bars and Lounges	1 per 60 sq. ft. of floor area for dining 1 per 300 sq. ft. for all other floor area
Restaurants and Cafes	1 per 60 sq. ft. of floor area for dining 1 per 300 sq. ft. for all other floor area
Take-Out Food and Beverage	1 per 300 sq. ft. of gross floor area
Food Preparation	1 per 1,500 sq. ft. of use area plus 1 per 300 sq. ft. of office area
Gas and Service Stations	2 for gas station plus 1 per 100 sq. ft. of retail and as required for vehicle repair
Lodging	
Bed and Breakfast	1 per guest room plus parking required for residential use

Attachment: Draft Zoning Code Public Review 02.04.2016 (1392 : Zoning Code Update)

Hotel	1 per guest room plus 1 per 300 sq. ft. of office
Maintenance and Repair Services	1 per 600 sq. ft.
Personal Services	1 per 300 sq. ft.
Professional Offices	1 per 300 sq. ft.
Salvage and Wrecking	1 per 500 sq. ft. of building area plus 1 per 0.5 acre of outdoor use area.
Self-Storage	1 per 5,000 sq. ft.
Retail	1 per 300 sq. ft. of customer area
Vehicle Repair	1 per 500 sq. ft. of non-service bay floor area plus 2 per service bay
Vehicle Sales and Rental	1 per 300 sq. ft. for offices plus 1 per 1,000 sq. ft. of display area and requirements for vehicle repair where applicable
Wholesale	1 per 5,000 sq. ft.
Heavy Commercial and Industrial Land Uses	
Construction and Material Yards	1 per 2,500 sq. ft.
Custom Manufacturing	1 per 2,000 sq. ft., plus 1 per 300 sq. ft. of office
Light Manufacturing	1 per 1,500 sq. ft. of use area plus 1 per 300 sq. ft. of office
Warehouse, Distribution, and Storage Facilities	1 per 1,500 sq. ft.
Transportation, Communication, and Utility Uses	
Utilities, Major	As determined by a parking demand study
Utilities, Minor	None
Recycling Collection Facilities	1 per 1,000 sq. ft. of floor area
Wireless Communications Facilities	None
Other Uses	
Accessory Uses	Same as primary use
Home Occupation	None beyond requirement for residence
Quasi-Public Seating Areas	None
Temporary Uses	As determined by Planning Commission

Attachment: Draft Zoning Code Public Review 02.04.2016 (1392 : Zoning Code Update)

Urban Agriculture	
Home Gardens	None beyond requirement for residence
Community Gardens	None
Urban Farms	As determined by a parking demand study

C. Calculation of Required Spaces.

1. **Floor Area**. Where a parking requirement is a ratio of parking spaces to floor area, the floor area is assumed to be gross floor area, unless otherwise stated. The floor area of a use shall be calculated as described in Section 17.48.040 (Floor Area and Floor Area Ratio). Pursuant to Section 17.48.040, floor area for garages and other parking facilities are generally not included in the calculation of floor area for the purpose of determining on-site parking requirements.
2. **Employees.** Where a parking requirement is stated as a ratio of parking spaces to employees, the number of employees is based on the largest shift that occurs in a typical week.
3. **Seats.** Where a parking requirement is stated as a ratio of parking spaces to seats, each 24 inches of bench-type seating at maximum seating capacity is counted as one seat.
4. **Fractional Spaces**. In determining the number of required parking, fractions of spaces over one-half shall be rounded up to the next whole number.

Note: Subsection E below allows the Community Development Director to determine the parking requirement for an unlisted land use. The existing Zoning Code requires the Planning Commission to make this determination.

D. Unlisted Uses. The parking requirement for land uses not listed in Table 17.76-1 and Table 17.76-2 shall be determined by the Community Development Director based on the requirement for the most comparable similar use, the particular characteristics of the proposed use, and any other relevant data regarding parking demand.

E. Sites with Multiple Uses. Where more than one land use is conducted on a site, the minimum number of required on-site parking spaces shall be the sum of the number of parking spaces required for each individual use.

F. Additional Required Parking. The Planning Commission may require more on-site parking than required by Table 17.76-1 and Table 17.76-2 if the Planning Commission determines that additional parking is needed to serve the proposed use and to minimize adverse impacts on neighboring properties.

17.76.040 General Requirements

A. Availability and Use of Spaces.

Attachment: Draft Zoning Code Public Review 02.04.2016 (1392 : Zoning Code Update)

1. In all zoning districts, required parking spaces shall be permanently available and maintained to provide parking for the use they are intended to serve.
2. Owners, lessees, tenants, or persons having control of the operation of a use for which parking spaces are required shall not prevent or restrict authorized persons from using these spaces.
3. Required parking spaces shall be used exclusively for the temporary parking of vehicles and shall not be used for the sale, lease, display, repair, advertising, or storage of vehicles, trailers, boats, campers, mobile homes, merchandise, or equipment, or for any other use not authorized by the Zoning Code.

B. Parking in Front and Exterior Side Setback Areas.

Note: Limitations on parking in front and exterior side setback areas in this subsection are new.

1. **R-1 Zoning District.** In the R-1 zoning district, the width of a parking space in the required front or exterior side setback area may not exceed 10 feet. See Figure 17.76-1. The Planning Commission may allow a larger parking area within the required front and exterior side setback areas with a Design Permit if locating this parking outside of the setback areas is infeasible due to unique physical conditions on the site.

FIGURE 17.60-1: PARKING IN FRONT SETBACK AREA IN R-1 ZONING DISTRICT

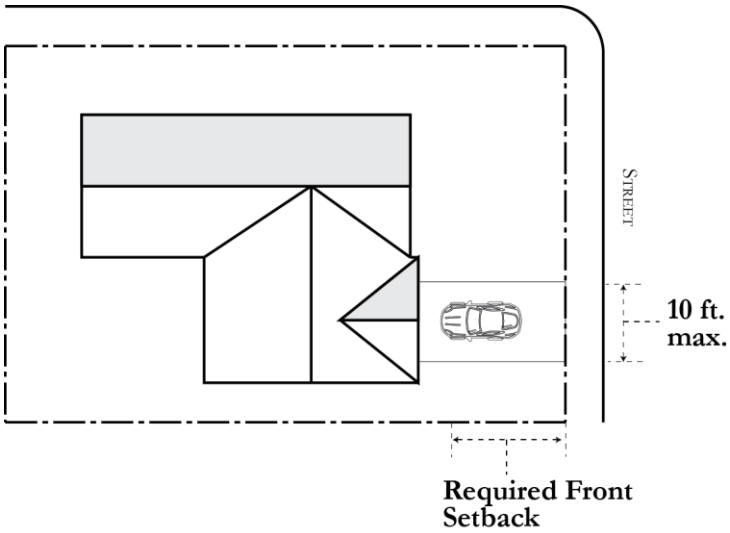

2. **Other Zoning Districts**. In all zoning districts other than the R-1 zoning district, required parking spaces may not be located within required front or exterior side setback areas.

C. Location of Parking.

Attachment: Draft Zoning Code Public Review 02.04.2016 (1392 : Zoning Code Update)

1. **All Zoning Districts**. Required parking spaces may not be located within any public or private right-of-way unless located in a sidewalk exempt area and Encroachment Permit is granted.

2. **R-1 Zoning District**. Required parking spaces in the R-1 zoning district shall be on the same parcel as the use that they serve.

3. **MU-V Zoning District.** Required parking spaces for new development and intensified uses in the MU-V zoning district shall be provided on sites outside of the Village area. These spaces shall be within walking distance of the use which it serves or at remote sites served by a shuttle system. The Planning Commission may approve exceptions to allow on-site parking in the MU-V district for:

   a. Non-historic structures in residential areas bounding the central commercial district of the village;

   b. The Capitola Theater site (APN 035-262-04) and Mercantile site (APN 035-221-17) if driveway cuts are minimized to the extent possible and parking areas are located on the interior of the sites; and

   c. If mandated under Federal Emergency Management Agency regulations and as consistent with the certified Local Coastal Program.

4. **Other Zoning Districts.** In all zoning districts other than the R-1 and MU-V zoning district, required parking shall be located on the same lot as the use they are intended to serve, except as allowed by Section 17.76.050.C below.

Note: Large vehicle storage requirements in subsection D below are new.

D. Large Vehicle Storage in the R-1 Zoning District. In addition to the required on-site parking spaces for a single-family dwelling, one additional on-site parking or storage space may be provided on a parcel in the R-1 zoning district for a recreational vehicle, boat, camper, or similar vehicle. This space may not be located in a required front or exterior side setback area and may be utilized only to store a vehicle that does not exceed 13.5 feet in height and 25 feet in length. Such parking or storage spaces shall be finished in concrete, asphalt, semi-permeable pavers, or a similar paved surface.

Note: Covered parking requirements and carport design standards in subsection E below are new.

E. Covered Parking in the R-1 Zoning District.

1. When required by this chapter, covered parking spaces serving a single-family dwelling shall be provided within an enclosed garage. The Planning Commission may allow required covered parking spaces to be provided within an open carport with a Design Permit if the Planning Commission finds that a garage is practically infeasible or that a carport results in a superior project design.

Attachment: Draft Zoning Code Public Review 02.04.2016 (1392 : Zoning Code Update)

2. All carports serving a single-family dwelling shall comply with the following design standards:

   a. Carports shall be designed with high quality materials, compatible with the home. The roofing design, pitch, colors, exterior materials and supporting posts shall be similar to the home. The carport shall appear substantial and decoratively finished in a style matching the home which it serves.

   b. The slope of a carport roof shall substantially match the roof slope of the home which it serves.

   c. Pedestrian pathways connecting the carport with the home shall be provided.

3. Garages in the R-1 zoning district may be converted to habitable living space only if the total number of required on-site parking spaces is maintained, including covered spaced for the covered parking space requirement.

F. Electric Vehicle Charging.

1. **When Required**. Electric vehicle charging stations shall be provided:

   a. For new structures or uses required to provide at least 25 parking spaces; and

   b. Additions or remodels that increase an existing parking lot of 50 for more spaces by 10 percent or more.

2. **Number of Charging Stations**. The number of required charging stations shall be as follows:

   a. 25-49 parking spaces: 1 charging station.

   b. 50-100 parking spaces: 2 charging stations, plus one for each additional 50 parking spaces.

3. **Location and Signage**. Charging stations shall be installed adjacent to standard size parking spaces. Signage shall be installed designating spaces with charging stations for electric vehicles only.

G. Parking for Persons with Disabilities.

1. Parking spaces for persons with disabilities shall be provided in compliance with California Code of Regulations Title 24.

2. Parking spaces required for the disabled shall count toward compliance with the number of parking spaces required by Table 17.76-1 and Table 17.76-2.

17.76.050 On-site Parking Alternatives

Note: On-site parking reductions in this section are new, except for off-site parking (Subsection C) and fees in lieu of parking in (Subsection I).

A. Purpose. This section identifies alternatives to required on-site parking to:

Attachment: Draft Zoning Code Public Review 02.04.2016 (1392 : Zoning Code Update)

1. Allow for creative parking solutions;
2. Enhance economic vitality in Capitola;
3. Promote walking, biking, and use of transit; and
4. Encourage the efficient use of land resources consistent with the General Plan.

B. Required Approval. All reductions in on-site parking described in this section require Planning Commission approval of a Conditional Use Permit.

C. Off-Site Parking.

1. For multi-family housing and non-residential uses, the Planning Commission may allow off-site parking if the Commission finds that practical difficulties prevent the parking from being located on the same lot it is intended to serve.
2. On-site parking shall be located within a reasonable distance of the use it is intended to serve, as determined by the Planning Commission.
3. A covenant record, approved by the City Attorney, shall be filed with the County Recorder. The covenant record shall require the owner of the property where the on-site parking is located to continue to maintain the parking space so long as the building, structure, or improvement is maintained in Capitola. This covenant shall stipulate that the title and right to use the parcels shall not be subject to multiple covenant or contract for use without prior written consent of the City.

D. Shared Parking. Multiple land uses on a single parcel or development site may use shared parking facilities when operations for the land uses are not normally conducted during the same hours, or when hours of peak use differ. The Planning Commission may allow shared parking if:

1. The parking will be shared by non-residential land uses only;
2. A parking demand study approved by the Community Development Director demonstrates that there will be no substantial conflicts between the land uses' principal hours of operation and periods of peak parking demand;
3. The total number of parking spaces required for the land uses does not exceed the number of parking spaces anticipated at periods of maximum use; and
4. The proposed shared parking facility is located no further than 400 feet from the primary entrance of the land use which it serves.

E. Valet Parking. The Planning Commission may allow up to 25 percent of the required on-site parking spaces to be valet spaces. Valet parking shall comply with the following standards:

1. Valet parking lots must be staffed at all times by an attendant who is authorized and able to move vehicles.
2. A valet parking plan shall be reviewed and approved by the Community Development Director in consultation with the Public Works Director.

Attachment: Draft Zoning Code Public Review 02.04.2016 (1392 : Zoning Code Update)

3. Valet parking may not interfere with or obstruct vehicle or pedestrian circulation on the site or on any public street or sidewalk.

4. The use served by valet parking shall provide a designated drop-off and pick-up area. The drop-off and pick-up area may be located adjacent to the building, but it may not be located within a fire lane, impede vehicular and/or pedestrian circulation, or cause queuing in the right-of-way or drive aisle.

F. Low Demand. The number of required on-site parking spaces may be reduced if the Planning Commission finds that the land use will not utilize the required number of spaces due to the nature of the specific use. This finding shall be supported by the results of a parking demand study approved by the Community Development Director in consultation with the Public Works Director.

G. Transportation Demand Management Plan. The Planning Commission may reduce the number of required on-site parking spaces for employers that adopt and implement a Transportation Demand Management (TDM) Plan subject to the following requirements and limitations:

1. A TDM Plan reduction is available only to employers with 25 or more employees.

2. Required on-site parking spaces may be reduced by no more than 15 percent.

3. The TDM Plan shall be approved by the Community Development Director in consultation with the Public Works Director.

4. The TDM Plan shall identify specific measures that will measurably reduce the demand for on-site parking spaces. Acceptable measures must ensure a reduced demand for parking spaces (e.g., an employee operated shuttle program). Measures that only encourage the use of transit, ridesharing, biking, or walking will not be accepted.

5. The employer shall appoint a program coordinator to oversee transportation demand management activities.

6. The program coordinator must provide a report annually to the Planning Commission that details the implementation strategies and effectiveness of the TDM Plan.

7. The Planning Commission may revoke the TDM Plan at any time and require additional parking spaces on site upon finding that that the Plan has not been implemented as required or that the Plan has not produced the reduction the demand for on-site parking spaces as originally intended.

H. Transit Center Credit. The Planning Commission may reduce the number of required parking spaces by up to 10 percent for non-residential or multiple-family development projects within 400 feet of a regional transit center.

I. Fees in Lieu of Parking

Attachment: Draft Zoning Code Public Review 02.04.2016 (1392 : Zoning Code Update)

1. Within the MU-V zoning district, on-site parking requirements for nonresidential uses may be satisfied by payment of an in-lieu parking fee established by the City Council to provide an equivalent number of parking spaces in a municipal parking lot. Such payment must be made before issuance of a building permit or a certificate of occupancy. Requests to participate in an in-lieu parking program must be approved by the City Council.

2. Fee revenue must be used to provide public parking in the vicinity of the use. In establishing parking districts, the City Council may set limitations on the number of spaces or the maximum percentage of parking spaces required for which an in-lieu fee may be tendered.

17.76.060 Parking Design and Development Standards

A. Minimum Parking Space Dimensions. Minimum dimensions of parking spaces shall be as shown in Table 17.76.3.

TABLE 17.76-3: MINIMUM PARKING SPACE DIMENSIONS

Type of Space	Minimum Space Dimensions
Spaces Serving Single-Family Dwellings	
Uncovered and covered (garage) spaces	10 ft. by 20 ft. [1]
In sidewalk exempt areas	10 ft. by 18 ft.
Spaces Serving Multi-Family and Non-Residential Uses	
Standard Spaces	9 ft. by 18 ft.
Compact Spaces	8 ft. by 16 ft.

Notes:
[1] The dimensions of parking spaces in an enclosed garage shall be measured from the interior garage walls.

B. Compact Spaces. A maximum of 30 percent of required on-site parking spaces serving multi-family and non-residential uses may be compact spaces. All parking spaces for compact cars shall be clearly marked with the word "Compact" either on the wheel stop or curb, or on the pavement at the opening of the space.

C. Parking Lot Dimensions. The dimensions of parking spaces, maneuvering aisles, and access ways within a parking lot shall conform to the City's official parking space standard specifications maintained by the Public Works Director and as shown in Figure 17.76-2 and Table 17.76-4.

Attachment: Draft Zoning Code Public Review 02.04.2016 (1392 : Zoning Code Update)

FIGURE 17.76-2: STANDARD PARKING LOT DIMENSIONS

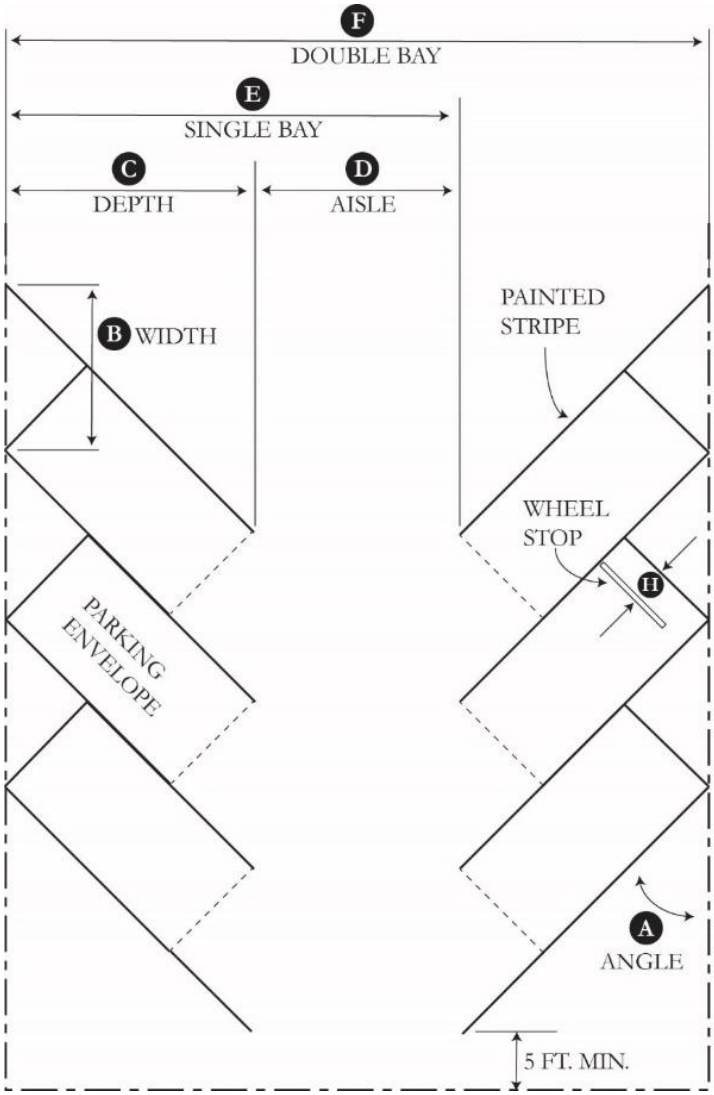

Attachment: Draft Zoning Code Public Review 02.04.2016 (1392 : Zoning Code Update)

TABLE 17.76-4: STANDARD PARKING LOT DIMENSIONS

A Parking Angle	B Width		C Depth		D Aisle			E Single Bay			F Double Bay		
	Compact	Standard	Compact	Standard	Compact	Residential	Commercial	Compact	Residential	Commercial	Compact	Residential	Commercial
90	7’-6”	8’-6”	15’-0”	18’-0”	20’-0”	22’-0”	25’-0”	35’-0”	40’-0”	43’-0”	50’-0”	58’-0”	61’-0”
85	7’-7”	8’-6”	15’-7”	18’-8”	19’-0”	21’-0”	24’-0”	34’-7”	39’-8”	42’-8”	50’-2”	58’-4”	61’-0”
80	7’-8”	8’-7”	16’-1”	19’-2”	18’-0”	20’-0”	23’-0”	34’-1”	39’-2”	42’-4”	50’-2”	58’-4”	p
75	7’-9”	8’-10”	16’-5”	19’-7”	17’-0”	19’-0”	22’-0”	33’-5”	38’-7”	41’-7”	49’-10”	58’-2”	61’-0”
70	8’-0”	9’-0”	16’-9”	19’-10”	16’-0”	18’-0”	21’-0”	32’-9”	37’-10”	40’-10”	49’-6”	57’-8”	66’-8”
65	8’-4”	9’-4”	16’-10”	19’-11”	15’-0”	17’-0”	20’-0”	31’-10”	36’-11”	39’-11”	48’-8”	56’-10”	59’-10”
60	8’-8”	9’-10”	16’-9”	19’-10”	14’-0”	16’-0”	19’-0”	30’-9”	35’-10”	38’-10”	47’-6”	55’-8”	58’-8”
55	9’-1”	10’-4”	16’-7”	19’-7”	13’-0”	15’-0”	18’-0”	29’-7”	34’-7”	37’-7”	46’-2”	54’-2”	57’-2”
50	9’-10”	11’-1”	16’-4”	19’-2”	12’-0”	14’-0”	17’-0”	28’-4”	33’-2”	36’-2”	44’-8”	52’-4”	55’-4”
45	10’-7”	12’-0”	15’-11”	18’-8”	11’-0”	13’-0”	16’-0”	25’-5”	30’-0”	33’-0”	42’-10”	50’-4”	53’-4”
40	11’-8”	13’-2”	15’-15”	18’-0”	10’-0”	12’-0”	15’-0”	24’-8”	28’-2”	31’-2”	40’-10”	48’-0”	51’-0”
35	13’-1”	14’-10”	14’-8”	17’-2”	10’-0”	11’-0”	14’-0”	24’-0”	26’-2”	29’-2”	39’-4”	45’-4”	48’-4”
30	15’-3”	17’-0”	14’-0”	16’-2”	10’-0”	10-0”	13’-0”	35’-0”	40’-0”	43’-0”	38’-0”	42’-4”	45’-4”

Attachment: Draft Zoning Code Public Review 02.04.2016 (1392 : Zoning Code Update)

D. Surfacing.

1. All parking spaces, maneuvering aisles, and access ways shall be paved with asphalt, concrete, or other all-weather surface.
2. Permeable paving materials, such as porous concrete/asphalt, open-jointed pavers, and turf grids, are a permitted surface material, subject to approval by the Public Works Director.

E. Tandem Parking Spaces. Tandem parking spaces are permitted for all residential land uses, provided that they comply with the following standards:

1. Parking spaces in a tandem configuration shall be reserved for and assigned to a single dwelling unit.
2. For single-family dwellings, tandem parking is permitted for up to two uncovered spaces in front of a garage, with a maximum of three tandem spaces, including the covered space in a single garage.
3. All required guest parking shall be provided as single, non-tandem parking spaces.
4. Tandem parking spaces shall not block the use of the driveway to access other parking spaces located within the parking area.
5. Tandem parking spaces shall be used to accommodate passenger vehicles only.

Note: Allowance for parking lifts in Subsection F below is new.

F. Parking Lifts. Required parking may be provided using elevator-like mechanical parking systems ("lifts") provided the lifts are located within an enclosed structure or otherwise screened from public view.

G. Lighting.

1. A parking area with six or more parking spaces shall include outdoor lighting that provides a minimum illumination of 1.0 foot candles over the entire parking area.
2. Outdoor lighting as required above shall be provided during nighttime business hours.
3. All parking space area lighting shall be energy efficient and designed so that any glare or spillage is directed away from residential properties.
4. All fixtures shall be hooded and downward facing.

H. Pedestrian Access.

1. Parking lots with more than 30 parking spaces shall include a pedestrian walkway in compliance with ADA requirements.
2. The design of the pedestrian walkway shall be clearly visible and distinguished from parking and circulation areas through striping, contrasting paving material, or other similar method as approved by the Community Development Director.

Attachment: Draft Zoning Code Public Review 02.04.2016 (1392 : Zoning Code Update)

I. Screening. Parking lots of six spaces or more shall comply with the following screening standards.

1. **Location.** Screening shall be provided along the perimeter of parking lots fronting a street or abutting a residential zoning district.
2. **Height.**
   a. Screening adjacent to streets shall have a minimum height of 3 feet.
   b. For parking lots within 10 feet of a residential zoning district, screening shall have a minimum height of 6 feet.
3. **Materials.** Required screening may consist of one or more of the following materials:
   a. Low-profile walls constructed of brick, stone, stucco or other durable and graffiti-proof coating material.
   b. Evergreen plants that form an opaque screen.
   c. An open fence combined with landscaping to form an opaque screen.
   d. A berm landscaped with ground cover, shrubs, or trees.
   e. Parking lots within 10 feet of a residential zoning district shall be screened by a 6 foot masonry wall.

J. Drainage. A drainage plan for all parking lots shall be approved by the Public Works Director.

K. Adjustments to Parking Design and Development Standards. The Planning Commission may allow adjustments to parking design and development standards in this section through the approval of a Minor Modification as described in Chapter 17.136 (Minor Modifications).

17.76.070 Parking Lot Landscaping

A. General Standards. All landscaping within parking lots shall comply with the requirements of Chapter 17.72 (Landscaping) in addition to the standards within this section.

B. Landscaping Defined. Except as otherwise specified in this section, landscaping and landscaped areas shall consist of plant materials, including any combination of trees, shrubs, and ground cover.

Note: Interior landscaping requirement in Subsection C below is new.

Attachment: Draft Zoning Code Public Review 02.04.2016 (1392 : Zoning Code Update)

C. Interior Landscaping. All areas within a parking lot not utilized for parking spaces or access/circulation shall be landscaped. For parking lots with more than 15 spaces, the minimum amount of interior landscaping is specified in Table 17.76-5. Interior landscaping is defined as any landscaped area surrounded on at least two sides by parking spaces or drive aisles, and excluding areas around the perimeter of the parcel or development site.

TABLE 17.76-5: MINIMUM REQUIRED PARKING LOT LANDSCAPING

Number of Required Parking Spaces	Percent of Surface Parking Area to be Landscaped
16 to 30	10%
31 to 60	15%
Over 60	20%

D. Shade Trees.

Note: Minimum number of shade trees reduced from one per two in the existing Zoning Code to one per five in this subsection.

1. One shade tree shall be provided for every five parking spaces in a parking lot.
2. Shade trees shall be a minimum 24-inch box in size and shall provide a minimum 30-foot canopy at maturity.
3. Shade trees shall be of a type that can reach maturity within 15 years of planting and shall be selected from a City-recommended list of canopy tree species.
4. Shade trees shall be arranged in a parking lot to provide maximum shade coverage (based on a 30-foot canopy) on August 21. The arrangement should approximate nearly 50 percent shade coverage.

E. Concrete Curbs.

1. All landscape areas shall be separated from parking spaces, drive aisles and driveways by a continuous, raised concrete curb. Raised concrete curbs shall be a minimum of 6 inches high by 4 inches deep.
2. The City may approve alternatives to raised concrete curbs as needed to comply with any mandatory stormwater drainage standards.

F. Parking Space Landscaping. A maximum of 2 feet at the front end of a parking space may be landscaped with low shrubs or ground cover in which a vehicle could extend over in lieu of paving surface. This landscaping may not count toward minimum required parking lot landscaped area.

Attachment: Draft Zoning Code Public Review 02.04.2016 (1392 : Zoning Code Update)

G. Timing. Landscaping shall be installed prior to the City's authorization to occupy any buildings served by the parking area, or prior to the final inspection for the parking lot.

Note: Reduced landscaping requirements for green parking lot design features in Subsection H below is new.

H. Green Parking Exemptions. Parking lots that incorporate solar panels, bioswales, and other similar green features into the parking lot design are eligible for reduced parking lot landscaping requirements with the approval of a Conditional Use Permit.

17.76.080 Bicycle Parking

Note: Bicycle parking requirements in this section are new.

A. Applicability. All multi-family developments of 5 units or more and commercial and commercial parking lots of 10 spaces or more shall provide bicycle parking as specified in this section.

B. Types of Bicycle Parking.

1. **Short-Term/Class II Bicycle Parking.** Short-term/Class II bicycle parking provides shoppers, customers, messengers and other visitors who generally park for two hours or less a convenient and readily accessible place to park bicycles.

2. **Long-Term/Class I Parking.** Long-term/Class I bicycle parking provides employees, residents, visitors and others who generally stay at a site for several hours a secure and weather-protected place to park bicycles. Long-term parking may be located in garages or other limited access areas for exclusive use by tenants or residents.

C. Bicycle Parking Spaces Required. Short-term and long-term bicycle parking spaces shall be provided as specified in Table 17.60-6.

TABLE 17.76-6 REQUIRED BICYCLE PARKING SPACES

	Required Bicycle Parking Spaces	
Land Use	**Short-Term Spaces**	**Long-Term Spaces**
Multi-Family Dwellings and Group Housing	10% of required automobile spaces; minimum of 4 spaces	1 per 5 units
Non-Residential Uses	10% of required automobile spaces	1 per 20 required automobile spaces for uses 10,000 sq. ft. or greater

Attachment: Draft Zoning Code Public Review 02.04.2016 (1392 : Zoning Code Update)

D. Short-Term/Class II Bicycle Parking Standards. Short-term bicycle parking shall be located within 100 feet of the primary entrance of the structure or use it is intended to serve.

E. Long-Term Bicycle Parking Standards. Following standards apply to long-term bicycle parking:

1. **Location.** Long-term bicycle parking shall be located on or within 750 feet of the use that it is intended to serve.
2. **Security.** Long-term bicycle parking spaces shall be secured. Spaces are considered secured if they are:
   a. In a locked room or area enclosed by a fence with a locked gate;
   b. Within view or within 100 feet of an attendant or security guard;
   c. In an area that is monitored by a security camera; or
   d. Visible from employee work areas.

F. Parking Space Dimensions.

1. Minimum dimensions of 2 feet by 6 feet shall be provided for each bicycle parking space.
2. An aisle of at least 5 feet shall be provided behind all bicycle parking to allow room for maneuvering.
3. 2 feet of clearance shall be provided between bicycle parking spaces and adjacent walls, polls, landscaping, pedestrian paths, and other similar features.
4. 4 feet of clearance shall be provided between bicycle parking spaces and adjacent automobile parking spaces and drive aisles.

G. Rack Design. Bicycle racks must be capable of locking both the wheels and the frame of the bicycle and of supporting bicycles in an upright position.

H. Cover. Required cover for bicycle parking spaces shall be permanent, designed to protect the bicycle from rainfall, and at least 7 feet above the floor or ground.

17.76.090 On-site Loading

A. Applicability. All retail, hotel, warehousing, manufacturing, and similar uses that involve the frequent receipt or delivery of materials or merchandise shall provide on-site loading spaces consistent with the requirements of this section.

B. Number of Loading Spaces. The minimum number of required loading spaces shall be as specified in Table 17.76-7.

Attachment: Draft Zoning Code Public Review 02.04.2016 (1392 : Zoning Code Update)

TABLE 17.60-7: REQUIRED LOADING SPACES

Floor Area	Required Loading Spaces
Less than 10,000 sq. ft.	None
10,000 to 30,000 sq. ft.	1
Greater than 30,000 sq. ft.	2 plus 1 per each additional 20,000 sq. ft.

C. Location.

1. Required loading spaces shall be located on the same lot as the use they are intended to serve.
2. No loading space shall be located closer than 50 feet to a residential zoning district, unless the loading space is wholly enclosed within a building or screened by a solid wall not less than 8 feet in height.

D. Dimensions.

1. Each loading space shall have minimum dimensions of 10 feet wide, 25 feet long, and 14 feet in vertical clearance.
2. Deviations from the minimum dimensions standards may be approved by the Community Development Director if the spatial needs are less than the minimum required due to the truck size and type that will be utilized in the operation of a specific business.

E. Design and Configuration.

1. Loading spaces shall be configured to ensure that loading and unloading takes place on-site and not within adjacent public rights-of way.
2. Sufficient maneuvering area shall be provided for loading spaces so that vehicles may enter and exit an abutting street in a forward direction.
3. Loading spaces and their associated maneuvering areas shall not encroach into required employee or visitor parking areas or other on-site areas required for vehicle circulation.
4. Loading spaces shall be striped and clearly identified as for loading purposes only.

17.76.100 Shuttle Program Parking

Parking for the free summer beach shuttle program shall be provided in a remote lot or lots, such as those located on Bay Avenue, Capitola Beach, and the Village public parking lots.

Attachment: Draft Zoning Code Public Review 02.04.2016 (1392 : Zoning Code Update)

Chapter 17.80 - SIGNS

Sections:

17.80.010 Purpose
17.80.020 Definitions
17.80.030 Permit Requirements
17.80.040 Rules of Measurement
17.80.050 Signs Allowed Without Permits
17.80.060 Prohibited Signs
17.80.070 General Sign Standards
17.80.080 Standards for Specific Types of Signs
17.80.090 Sign Standards for Zoning Districts
17.80.100 Residential Signs
17.80.110 Temporary Signs
17.80.120 Adjustment to Sign Standards
17.80.130 Master Sign Program
17.80.140 Nonconforming Signs
17.80.150 Violations and Enforcement

17.80.010 Purpose

This chapter establishes standards relating to the permitted type, size, height, placement, number, and design of signs. The intent of these standards is to:

A. Support economically viable businesses serving city residents, workers, and visitors.

B. Allow for signage that identifies businesses in a fair and equitable manner.

C. Protect and enhance the aesthetic qualities of the city.

D. Minimize hazards to motorists and pedestrians resulting from excessive, confusing, and distracting signs.

E. Allow for a simple and streamlined sign permitting process.

17.80.020 Definitions

The following definitions apply to this chapter:

A. **Awning Sign**. A sign incorporated into, attached, or painted on an awning.

B. **Awning Face Sign**. A sign located on the sloping plane face of an awning.

C. **Awning Valance Sign**. A sign located on the valance of an awning perpendicular to the ground.

Attachment: Draft Zoning Code Public Review 02.04.2016 (1392 : Zoning Code Update)

D. Center Identification Sign. A sign identifying the name of a shopping center and that does not include the name of any business within the center. A shopping center is a commercial building or group of buildings operated as a unit on a single parcel, sharing common parking areas or commonly owned adjacent parcels.

E. Construction Site Sign. An on-premise sign for an approved construction project that publicizes the future building and occupants as well as the architects, engineers and construction organizations involved in the project.

F. Directory Sign. An on-premise sign which shows the direction to or location of a customer entrance to a business.

G. Flags. Fabric, textile, or material with colors and/or patterns which display a symbol of a nation, State, company, or idea.

H. Monument Sign. An independent, freestanding structure supported on the ground as opposed to being supported on the building.

I. Projecting Sign. Any sign permanently attached to a building or wall such that the sign face or faces are perpendicular to the building or wall.

J. Roof Sign. Any sign that is mounted on a roof or a parapet, of a building.

K. Sidewalk Sign. Movable or permanent business identification signs placed in or attached to a public sidewalk.

L. Sign. Any device, fixture, placard or structure that uses any color, form, graphic, illumination, symbol or writing to advertise or announce the purpose of a person or entity, or to communicate information of any kind to the public.

M. Sign Area. See Section 17.80.040.A (Calculation of Sign Area).

N. Sign Copy. The area of a sign occupied by letters, numbers, graphics, or other content intended to inform, direct, or otherwise transmit information.

O. Sign Face. The area of a sign where sign copy is placed.

P. Wall Sign. A sign which is attached to or painted on the exterior wall of a structure with the display surface of the sign approximately parallel to the building wall.

Q. Window Sign. A sign posted, painted, placed, or affixed in or on a window exposed to public view.

17.80.030 Permit Requirements

Note: This sections allows most signs to be approved by the Community Development Director through an Administrative Sign Permit. The existing Zoning Code requires Planning Commission approval for most signs

Attachment: Draft Zoning Code Public Review 02.04.2016 (1392 : Zoning Code Update)

A. Administrative Sign Permits. An Administrative Sign Permit (Chapter 17.132) is required to install, construct, or enlarge a sign, except for:

1. Signs allowed without a planning permit, as specified in Section 17.80.050 (Signs Allowed without Permits).
2. Signs requiring a Sign Permit as identified in section B below.

B. Sign Permits. Planning Commission approval of a Sign Permit (Chapter 17.132) is required for the following types of signs and approvals:

1. Auto dealership signs in the C-R zoning district (Section 17.80.090.B.6) that are not otherwise allowed with an Administrative Sign Permit.
2. Adjustments to sign standards in low visibility areas in commercial zoning districts (17.80.090.B.7).
3. Signs that do not conform with permitted sign types and standards in Section 17.80.090 (Sign Standards for Zoning Districts)
4. Master sign programs (Section 17.80.130).

17.80.040 Rules of Measurement

A. Calculation of Sign Area.

1. Sign area is measured as the area of all sign copy, framing, or other display enclosed within a continuous perimeter forming a single geometric shape with no more than six sides. See Figure 17-80-1.

FIGURE 17-80-1: MEASUREMENT OF SIGN AREA

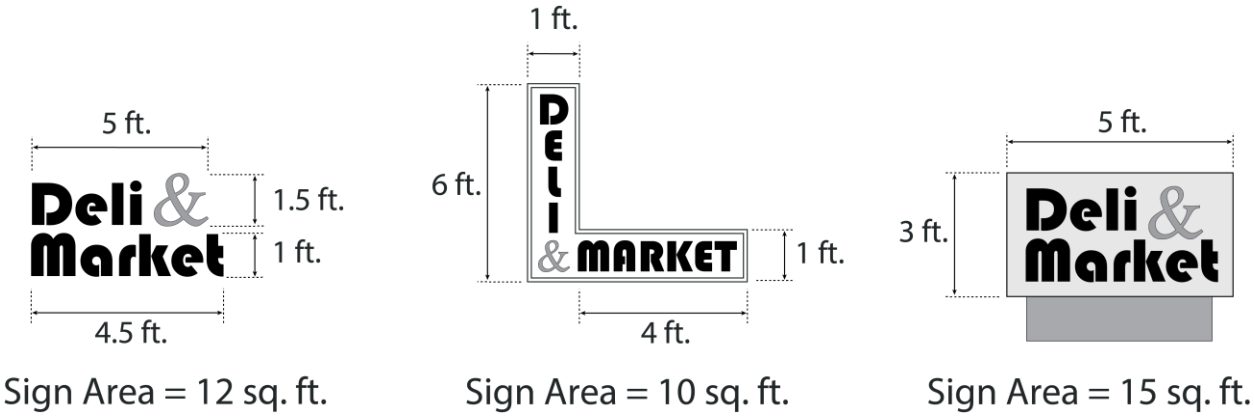

2. Supporting framework or bracing that is clearly incidental to the display itself shall not be calculated as sign area.

Attachment: Draft Zoning Code Public Review 02.04.2016 (1392 : Zoning Code Update)

3. The area of a double-faced (back-to-back) sign shall be calculated as a single sign face if the distance between each sign face does not exceed 18 inches and the two faces are parallel with each other

4. The area of spherical, free-form, sculptural or other non-planar signs are measured as 50 percent of the sum of the area enclosed within the four vertical sides of the smallest four-sided polyhedron that will encompass the sign structure. See Figure 17.80-2.

FIGURE 17.80-2: NON-PLANER SIGN AREA

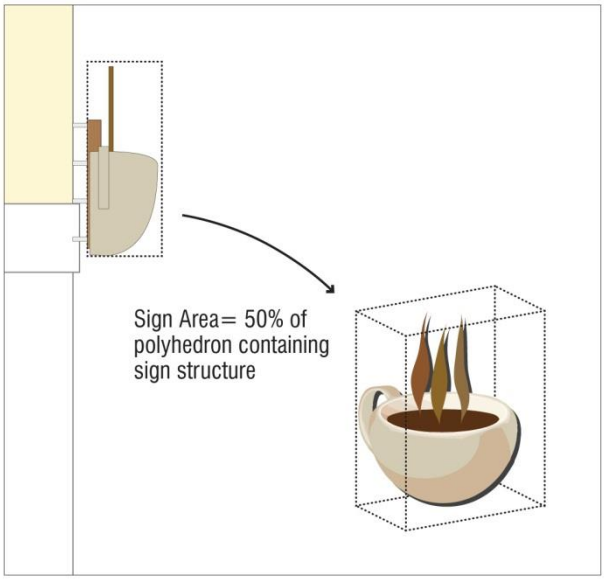

B. Monument Sign Height Measurement. The height of a monument or other freestanding sign is measured as the vertical distance from the sidewalk or top of curb nearest the base of the sign to the top of the highest element of the sign.

17.80.050 Signs Allowed Without Permits

Note: This section expands the type of signs currently allowed without a permit in Section 17.57.030 of the existing Zoning Code.

A. Types of Signs. The following signs are allowed without a planning permit and shall not be counted towards the allowable sign area or number of signs on a parcel:

1. On-site directional signs which do not include commercial messages or images, not to exceed 3 feet in height and 6 square feet in area.

2. Informational signs which do not include commercial messages or images, displayed for the safety and convenience of the public, providing information such as "restrooms," "danger," "impaired clearance," "no smoking," "parking in rear," and other signs of a similar nature.

3. Flags bearing noncommercial messages or graphic symbols as follows:

Attachment: Draft Zoning Code Public Review 02.04.2016 (1392 : Zoning Code Update)

a. Maximum pole height: 35 feet in residential zoning districts and 60 feet in all other zoning districts.

b. Maximum flag area: 40 square feet in residential zones and 108 square feet in non-residential zones.

4. One commemorative plaque identifying a building name, date of construction, or similar information that is cut into, carved, or made of stone, concrete, metal, or other similar permanent material.

5. One bulletin board on a parcel occupied by a noncommercial place of public assembly, with a maximum area of 12 square feet.

6. Political signs during an election period located outside of a public street, path, or right-of-way. In the R-1 and RM zoning districts political signs may not exceed 32 square feet per unit.

7. Signs within a building, or on the premises of a building, that are not visible from the public right-of-way and are intended for interior viewing only.

8. Murals on the exterior of a building that do not advertise a product, business, or service.

9. Official or legal notices required by a court order or governmental agency.

10. Signs installed by a governmental agency within the public right-of-way, including signs advertising local nonprofit, civic, or fraternal organizations.

11. Signs, postings, or notices required by a governmental agency to carry out its responsibility to protect the public health, safety, and general welfare.

12. Restaurant menu signs, with a maximum area of 3 square feet.

13. Real estate listings posted in the window of a real estate office, with a maximum area of 25 percent of the total window area.

14. Residential signs not requiring a building permit as specified in Section 17.80.100 (Residential Signs).

15. Temporary signs consistent with Section 17.80.110 (Temporary Signs).

B. Building Permit Review. Planning Division staff shall review all proposed signs listed in Section A (above) that require a Building Permit to verify compliance with all applicable standards.

Note: Ability to change the face of a sign without approval in Section C below is new to respond to legal requirements for sign regulations to be content neutral.

C. Changes to Sign Face. Changes to a sign face that do not structurally alter or enlarge a legally-established sign shall not require a planning permit.

D. Routine Maintenance. The painting, cleaning, repair, and normal maintenance of a legally-established sign shall not require a planning permit.

Attachment: Draft Zoning Code Public Review 02.04.2016 (1392 : Zoning Code Update)

17.80.060 Prohibited Signs

Note: This section expands the types of prohibited signs currently listed in Section 17.57.040 of the existing Zoning Code.

The following signs are prohibited:

A. Signs or sign structures which have become a public nuisance or hazard due to inadequate maintenance, dilapidation, or abandonment.

B. Portable signs placed on the ground other than sidewalk signs permitted in the MU-V zoning district consistent with Section 17.80.080.G (Sidewalk Signs).

C. Roof signs.

D. Signs emitting odors, gases, or fluids.

E. Signs that feature a flag, pennant, whirligig, or any device which is designed to wave, flutter, rotate or display other movement under the influence of wind, excluding flags and insignia of any government.

F. Digital display and electronic readerboard signs which allow the image on a sign to be changed by electronic control methods, except for digital gas and service station signs consistent with Section 17.80.080.E (Gas and Service Station Signs).

G. Animated signs, with the exception of clocks and barber poles.

H. Signs that emit sound.

I. Signs which simulate in size, color, lettering, or design a traffic control sign or signal.

J. Signs which flash, blink, change color, or change intensity.

K. Beacons.

L. Signs mounted or attached to a vehicle parked for the purpose of calling attention to or advertising a business establishment.

M. Signs that have been abandoned, or whose advertised use has ceased to function for a period of 90 days or more.

N. Signs adversely affecting traffic control or safety.

O. Signs containing obscene matter.

P. Signs with exposed raceways.

Q. Signs attached to trees.

R. Signs erected or maintained with horizontal or vertical clearance from overhead utilities less than required by State agencies.

S. Signs erected for the dominant purpose of being seen by travelers on a freeway, except for auto dealership signs as allowed by Section 17.80.090.B.6 (Auto Dealership Signs).

Attachment: Draft Zoning Code Public Review 02.04.2016 (1392 : Zoning Code Update)

T. Signs attached to balloons greater than fifteen inches in diameter.

U. Signs on public property not placed there by the public entity having the possessory interest in such property.

V. All other signs not specifically permitted by or exempted from the requirements of this chapter.

17.80.070 General Sign Standards

A. Maintenance. Signs, including all supports, braces, and anchors, shall be maintained in a state of good repair at all times. Damage to signs, including cracked sign faces, frayed or weathered fabric, and broken lighting, shall be repaired promptly.

B. Building Surface Repair. When an existing sign is replaced or modified, any newly exposed portions of a building surface on which the sign is displayed shall be repaired and repainted to restore a uniform appearance to the surface. Compliance with this requirement includes the removal of any excess conduit and supports, and the patching or filling of any exposed holes.

C. Illumination.

Note: Limiting internal illumination to lettering, trademark, or logo in paragraph 1 below is new.

1. Non-residential signs may be internally or externally illuminated. Internal illumination is permitted only when the portion of the sign that appears illuminated is the sign lettering, registered trademark, or logo.
2. The light source for externally illuminated signs shall be positioned so that light does not shine directly on adjoining properties or cause glare for motorists or pedestrians.
3. Exposed bulbs or exposed neon illumination is not permitted.

D. Materials and Design.

1. Except for window signs, all permanent signs shall be constructed of wood, metal, plastic, glass, or similar durable and weatherproof material.
2. The design of signs, including its shape, features, materials, colors, and textures, shall be compatible with the design character of the development or use it identifies.

E. Location and Placement.

1. All signs shall be located on the same parcel as the business or use that it serves, except as otherwise allowed by this chapter.
2. Signs shall not obstruct the ingress to, or egress from, a door, window, fire escape, or other required accessway.
3. Signs shall not interfere with visibility at an intersection, public right-of-way, driveway, or other point of ingress/egress. The City may require sign setbacks greater than specified in this chapter as needed to maintain adequate visibility for motorists and pedestrians.

F. Signs in the Public Right-of-Way.

1. No sign shall be permitted in the public right-of-way, except for:
   a. Signs installed or required by a governmental agency.
   b. Signs advertising local nonprofit, civic, or fraternal organizations with City Engineer approval.
   c. Awning, canopy , marquee, projecting, or suspended signs attached to a building wall subject to the requirements in Section 17.80.080 (Standards for Specific Types of Signs).
   d. Sidewalk signs in the Village Mixed Use (MU-V) zoning district consistent with Section 17.80.080.G (Sidewalk Signs).
   e. Shared auto dealership signs consistent with Section 17.80.090.B.6 (Auto Dealership Signs).
2. Any sign illegally installed or placed on public property shall be subject to removal and disposal as specified in Section 17.80.150 (Violations and Enforcement). The City shall have the right to recover from the owner or person placing such a sign the full costs of removal and disposal of the sign.

17.80.080 Standards for Specific Types of Signs

The following standards for specific types of signs apply in all zoning districts.

A. Awning Signs.

1. Awning signs shall be located on the awning above a display window or the entrance to the business it serves.
2. An awning sign that projects over any public walkway or walk area shall have an overhead clearance of at least 8 feet.

B. Monument Signs.

1. Monument signs shall be placed on the property of the business associated with the sign.
2. Where two monument signs are allowed on a corner parcel, each sign be placed at least 200 feet from the intersection corner.
3. The area surrounding the base of a monument sign shall be landscaped consistent with Chapter 17.72 (Landscaping).
4. Monument signs shall be placed at least 5 feet away from any public or private driveway.
5. Monument signs shall be placed at least 5 feet behind sidewalk or property line, whichever is greater.
6. The height of a monument sign is measured as the vertical distance from the sidewalk or top of curb nearest the base of the sign to the top of the highest element of the sign.
7. A maximum of four tenants may be named on a monument sign.

Attachment: Draft Zoning Code Public Review 02.04.2016 (1392 : Zoning Code Update)

8. Monument signs are not allowed in conjunction with wall signs on a property with three or fewer businesses.

C. Wall Signs.

1. Wall signs shall be attached parallel to the exterior wall of the business associated with the sign and may not extend above the top of building wall.
2. Wall signs may be in cabinets, on wood, or on similar material attached to the wall or painted directly on the wall.
3. Any portion of a wall sign that projects over any public walkway or walk area shall have an overhead clearance of at least 8 feet.
4. Wall signs are not allowed in conjunction with a monument sign on a property with three or fewer businesses.

D. Projecting Signs.

1. Projecting signs shall be attached to the ground floor exterior wall of the business associated with the sign and may not extend above the top of the second story finished floor.
2. Projecting signs shall maintain a minimum 2-foot horizontal clearance from a driveway or street curb.
3. An encroachment permit must be obtained for all signs projecting over a public right-of-way.
4. A projecting sign that projects over any public walkway or walk area shall have an overhead clearance of at least 8 feet.

E. Gas and Service Station Signs. All signs associated with gas and service stations shall comply with the following standards.

1. A maximum of two signs, not exceeding 4 square feet, shall be allowed on each pump island to denote either full service or self-service.
2. No other signs will be allowed to be attached to pumps or islands other than required by State law. (See Business & Professions Code Section 13530.)
3. A six-foot-high monument sign which displays prices charged, credit cards accepted or special services rendered shall be allowed on each street frontage.
4. Digital changeable copy signs for gasoline pricing is permitted.

F. Window Signs

1. Window signs may be attached only to the inside of a ground floor window of the business associated with the sign.

G. Sidewalk Signs in the MU-V Zoning District. The following additional standards apply to sidewalk signs in the MU-V zoning district.

1. Only one two-sided sidewalk sign per business establishment is permitted.

Attachment: Draft Zoning Code Public Review 02.04.2016 (1392 : Zoning Code Update)

2. The sidewalk in front of the business must be at least 78 inches in width.
3. Sidewalk signs consistent with these standards and as illustrated in Figure 17-80-3 can be issued an over the counter sign permit by the Community Development Director.

FIGURE 17-80-3: SIDEWALK SIGN STANDARDS AND DESIGN CONCEPTS

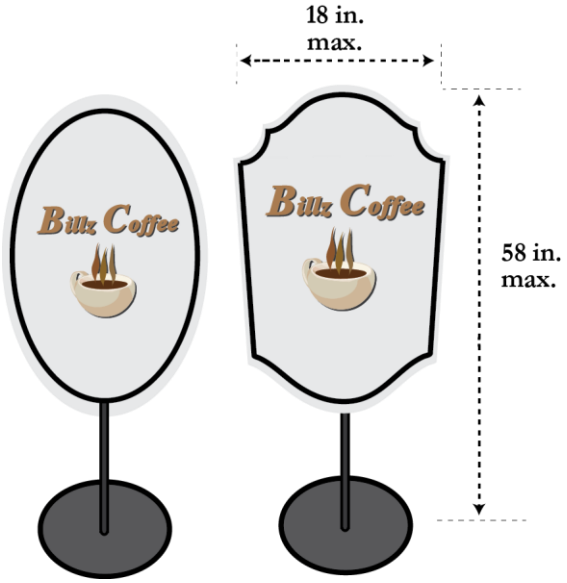

4. Sidewalk signs shall be no larger than 18 inches in width and 3 square feet in size and no taller than 58 inches measured from the ground.
5. The signs may be placed on poles which will either be placed in a hole drilled into the sidewalk or in moveable stand. The moveable stands cannot be more than eighteen inches wide and will need to be approved as part of the sign permit. Lights, banners, flags or similar objects shall not be placed on or adjacent to sidewalk signs.
6. All sidewalk signs will need to obtain an encroachment permit. The encroachment permit will identify the location and method used to drill a hole in the sidewalk and/or the location of a sign on a base.
7. Sidewalk signs shall not interfere with pedestrian ingress or egress as required by the building code or obstruct vehicular traffic sight distance requirements. A 48 inch level clear path of travel on concrete or similar material must be maintained where the sign is located.
8. Sidewalk signs shall be spaced a minimum of 30 linear feet from all other permitted sidewalk signs.
9. Sidewalk signs may be used only during the hours when the business is open to the public. At all other times the sign and base must be stored within the business premises.

Attachment: Draft Zoning Code Public Review 02.04.2016 (1392 : Zoning Code Update)

10. No other temporary advertising signs may be used at the same time as the sidewalk sign is in use. This includes all banners, flags, window signs covering more than one-third of the window or other temporary signage.
11. All other signs on the property must be in conformance with the City's sign regulations prior to a sidewalk sign permit being issued.
12. No sidewalk sign may contain lights of any kind.
13. No more than thirty sidewalk signs will be allowed in the MU-V zoning district at any time.
14. The owner of any business desiring to place a sidewalk sign on the City right-of-way shall provide an executed City hold harmless waiver and proof of liability insurance to the satisfaction of the City Attorney in the amount of one million dollars prior to placing the sign within said right-of-way.
15. Multi-tenant developments shall be permitted one sidewalk sign per each common exterior public business entrance.
16. Individual signs may advertise more than one business.

17.80.090 Sign Standards for Zoning Districts

Note: Sign standards tailored to individual zoning districts in this section are new.

A. Mixed Use Zoning Districts.

1. **Sign Area.** In the mixed use zoning districts a maximum of 0.5 square feet of total sign area is allowed for each linear foot of building frontage to a maximum of 25 square feet.
2. **Permitted Signs.** The following signs that comply with all applicable standards are permitted in the Village Mixed Use (MU-V) and Neighborhood Mixed Use (MU-N) zoning districts with an Administrative Sign Permit. In addition to the standards in this section, all signs must comply with standards in Section 17.80.070 (General Sign Standards) and Section 17.76.090 (Standards for Specific Types of Signs).

   a. **Awning Face Signs**.
      (1) Maximum area: 20 percent of awning face.
      (2) Maximum letter height: 18 inches.
      (3) Maximum number: 1 sign per awning.

   b. **Awning Valance Signs**.
      (1) Maximum area: 75 percent of valance.
      (2) Maximum letter height: two-thirds of valance height.
      (3) Maximum number: 1 per awning

   c. **Monument Signs**.
      (1) Maximum area: 12 square feet.
      (2) Maximum height: 4 feet.

Attachment: Draft Zoning Code Public Review 02.04.2016 (1392 : Zoning Code Update)

(3) Maximum number: 1 sign per property.

d. **Projecting Signs**.
(1) Maximum projection from wall: 4 feet.
(2) Maximum area: 4 square feet.
(3) Maximum number: 1 sign per storefront.

e. **Sidewalk Signs**
(1) Maximum area: 4.5 square feet.
(2) Maximum height: 58 inches
(3) Maximum with: 18 inches
(4) See Section 17.80.080.G (Sidewalk Signs in the MU-V Zoning District) for additional detailed standards for sidewalk signs.

f. **Wall Signs**.
(1) Maximum projection from wall: 4 inches.
(2) Maximum area: 0.5 square feet per linear foot of shopfront.
(3) Maximum number: 1 per storefront.

g. **Window Signs**.
(1) Maximum area: 25 percent of window.
(2) Maximum number: 1 per storefront.

3. **Other Signs.** Signs that are not listed in Subparagraph 2 (Permitted Signs) above, or that deviate from these standards, may be allowed in the mixed use zoning districts with Planning Commission approval of a Sign Permit.

4. **Design Standards.** The following design standards apply to all signs in the mixed use zoning districts.

a. Signs shall preserve, complement, or enhance the architectural composition and features of the building to which it is attached. Signs may not cover or obscure significant architectural details of the building to which it is attached.

b. Signs shall be coordinated with the overall façade composition, including ornamental details and other signs on the building to which it is attached.

c. Signs shall be mounted to fit within existing architectural features. The shape of the sign shall be used to reinforce the relationship of moldings and transoms seen along the street.

d. Signs shall be located and designed so that they are legible when viewed from the sidewalk. Sign letter styles and sizes shall be designed for legibility from the sidewalk, not the street.

e. To the extent possible, sign attachment parts shall be reused in their original location (holes in the façade or fixing positions) to protect the original building materials.

Attachment: Draft Zoning Code Public Review 02.04.2016 (1392 : Zoning Code Update)

f. Internally illuminated signs are permitted only for individual cut out letters with only the letter face illuminated. Large panel internally illuminated signs are prohibited.

g. Wiring conduit for sign lighting shall be carefully routed to avoid damage to architectural details and to be concealed from view as much as possible.

h. Sign materials and colors shall be compatible with the period and style of building to which is it is attached. Sign panels shall avoid the extensive use of primary color or significant areas of white or cream.

i. Letters and logos shall be raised, routed into the sign face, or designed to give the sign variety and depth.

5. **Residential Signs.** Signs associated with residential uses in the mixed use zoning district shall comply with Section 17.80.100 (Residential Signs).

B. Commercial Zoning Districts.

1. **Sign Area.** In the commercial zoning districts a maximum of 0.5 square feet of total sign area is allowed for each linear foot of building frontage to a maximum of 50 square feet.

2. **Permitted Signs.** The following signs that comply with all applicable standards are permitted in the Regional Commercial (C-R) and Community Commercial (C-C) zoning districts with an Administrative Sign Permit. In addition to the standards in this section, all signs must comply with standards in Section 17.80.070 (General Sign Standards) and Section 17.80.080 (Standards for Specific Types of Signs).

a. **Awning Face Signs**.
(1) Maximum area: 30 percent of awning face.
(2) Maximum number: 1 sign per awning.

b. **Awning Valance Signs**.
(1) Maximum area: 75 percent of valance.
(2) Maximum number: 1 sign per awning.

c. **Center Identification Signs**.
(1) Maximum Area: 30 square feet in the CR zoning district and 25 square feet in the CC zoning district.
(2) Maximum Height: 5 feet.
(3) Maximum number: 1 sign per shopping center.

d. **Directory Sign.**
(1) Maximum Area: 30 square feet in the CR zoning district and 25 square feet in the CC zoning district.
(2) Maximum Height: 5 feet.
(3) Maximum number: 1 per property.

e. **Monument Signs**.

Attachment: Draft Zoning Code Public Review 02.04.2016 (1392 : Zoning Code Update)

(1) Maximum area: 60 square feet. in the CR zoning district and 35 sq. ft. in the CC zoning district.
(2) Maximum height: 8 feet.
(3) Maximum number: 1 sign per building frontage.

f. **Projecting Signs**.
(1) Maximum projection from wall: 4 feet.
(2) Maximum area: 12 square feet.
(3) Maximum number: 1 sign per business.

g. **Wall Signs**.
(1) Maximum projection from wall: 12 inches.
(2) Maximum area: 1 square feet per linear foot of building frontage.
(3) Maximum number: 1 sign per building frontage.

h. **Window Signs**.
(1) Maximum area: one-third of window area.
(2) Maximum number: 1 sign per window.

3. **Other Signs.** Signs that are not listed in Subparagraph 2 (Permitted Signs) above or that deviate from these standards may be allowed in the commercial zoning districts with Planning Commission approval of a Sign Permit.

4. **Residential Signs.** Signs associated with residential uses in the mixed use zoning district shall comply with Section 17.80.100 (Residential Signs).

Note: Auto dealership sign standards in paragraph 5 below are new.

5. **Auto Dealership Signs**. In addition to signs allowed with an Administrative Sign Permit (17.080.030.A), the Planning Commission may allow special auto dealership signage in the CR zoning district with approval of a Sign Permit subject to the following standards:

a. Location: On or adjacent to an auto dealership land use.

b. Placement: 10 feet minimum setback from property line abutting the public right-of-way.

c. Maximum Height: At or below roof line.

d. Maximum Area: 100 square feet

e. The Planning Commission may allow one shared sign used by multiple auto dealerships at the entry of Auto Plaza Drive which extends into or above the public right-of-way.

6. **Low Visibility Areas**.

a. Commercial properties in the C-R and C-C zoning districts are eligible for an adjustment to sign standards if signs on the property consistent, with applicable standards, would not be easily visible from a public street.

b. Adjustments to sign standards require Planning Commission approval of a Sign Permit.

c. Adjustments are allowed to required sign types, height, size, placement, and number. Adjustments may not allow for prohibited signs or monument signs.

d. The Planning Commission may approve additional or variations to any type of signage upon making the following findings:

(1) The special signage, as designed and conditioned, is necessary and appropriate for the subject commercial site, in order to allow the site and the businesses located within it to be competitive with other businesses of a similar nature located elsewhere, and/or to be competitive with industry standards governing sale of the merchandise offered at the site.

(2) The special signage, as designed and conditioned, will not have a significant adverse effect on the character and integrity of the surrounding area.

7. **Design Standards.** The following design standards apply to all signs in the commercial zoning districts.

a. Sign design shall conform to and be in harmony with the architectural character of the building.

b. Signs shall be symmetrically located within a defined architectural space.

c. Internally illuminated signs are permitted only for individual cut out letters with only the letter face illuminated or back lit. Large panel internally illuminated signs are prohibited.

d. The design of monument and other freestanding signs relate to the architecture of the building or development they serve. Exterior materials, finishes and colors shall be the same or similar to those of the building or structures on site.

e. Letters and logos shall be raised, routed into the sign face, or designed to give the sign variety and depth.

C. Industrial Zoning District.

1. **Sign Area.** In the Industrial (I) zoning district, a maximum of 0.5 square feet of total sign area is allowed for each linear foot of building frontage to a maximum of 50 square feet.

2. **Permitted Signs.** The following signs that comply with all applicable standards are permitted in the Industrial (I) zoning districts with an Administrative Sign Permit. In addition to the standards in this section, all signs must comply with standards in Section 17.80.070 (General Sign Standards) and Section 17.80.080 (Standards for Specific Types of Signs).

a. **Awning Face Signs**.

(1) Maximum area: 20 percent of awning face.

(2) Maximum number: 1 sign per awning.

b. **Awning Valance Signs**.

(1) Maximum area: 75 percent of valance.

(2) Maximum number: 1 sign per awning.

Attachment: Draft Zoning Code Public Review 02.04.2016 (1392 : Zoning Code Update)

c. **Monument Signs**.
   (1) Maximum area: 35 square feet.
   (2) Maximum height: 4 feet.
   (3) Maximum number: 1 sign per building frontage.
   (4) Not allowed in conjunction with a wall sign.

d. **Wall Signs**.
   (1) Maximum projection from wall: 12 inches.
   (2) Maximum area: 1 square feet per linear foot of building frontage.
   (3) Maximum number: 1 sign per building frontage.
   (4) Not allowed in conjunction with a monument sign

e. **Window Signs**.
   (1) Maximum area: 30 percent of window area.
   (2) Maximum number: 1 sign per window.

3. **Other Signs.** Signs that are not listed in Subparagraph 2 (Permitted Signs) or that deviate from these standards may be allowed in the Industrial (I) zoning district with Planning Commission approval of a Sign Permit.

4. **Design Standards.** Signs within the Industrial (I) zoning district shall be constructed of metal or other materials consistent with the light industrial character of the zoning district.

D. Visitor Serving, Community Facility, and Parks and Open Space Zoning Districts. In the Visitor Serving (VS), Community Facility (CF) and Parks and Open Space (P/OS) zoning districts, standards for the permitted type, maximum area, and maximum number of signs shall be established by the Planning Commission through a Sign Permit. In addition to these standards, all signs shall comply with standards in Section 17.80.070 (General Sign Standards) and Section 17.80.080 (Standards for Specific Types of Signs). City-installed signs do not require a sign permit.

E. Planned Development Zoning District. In the Planned Development (PD) zoning district, standards for the permitted type, maximum area, and maximum number of signs shall be established by the City Council in the Final Development Plan. In addition to these standards, all signs shall comply with standards in Section 17.80.070 (General Sign Standards) and Section 17.80.080 (Standards for Specific Types of Signs).

17.80.100 Residential Signs

A. General Standards. Dwelling units may display signs consistent with the following standards:

1. Maximum allowable sign area: 3 square feet per unit.

2. Maximum number of signs: no limit.

3. Permitted sign types: Window and wall signs.

4. The height of signs on fences shall not exceed the maximum permitted fence height in the applicable zone.

Attachment: Draft Zoning Code Public Review 02.04.2016 (1392 : Zoning Code Update)

5. An Administrative Sign Permit is required if the sign requires a building permit; otherwise, no planning permit is required.
6. Illumination from non-ambient light sources is prohibited. Flashing, neon, and exposed bulb signs are prohibited.
7. Any and all protected non-commercial speech is permitted on a residential sign, including garage sale signs nameplates, identification signs, and warning signs.
8. For home occupations, one single wall-mounted outdoor sign of not more than 1 square foot in area is permitted.

B. Multi-Unit Properties. In addition to the signs allowed for each dwelling unit, multi-unit properties may display one or more master sign subject to the following requirements:

1. Maximum allowable sign area: 20 square feet per property.
2. A master sign for a multi-unit property requires an Administrative Sign Permit.

17.80.110 Temporary Signs

A. Permitted Temporary Signs. Table 17.80-1 (Temporary Sign Standards) identifies temporary signs permitted either by-right or with the approval of an Administrative Sign Permit. The Planning Commission may allow other types of temporary signs or temporary signs that do not comply with the standards in Table 17.80-1 with approval of a Sign Permit.

Attachment: Draft Zoning Code Public Review 02.04.2016 (1392 : Zoning Code Update)

TABLE 17.80-1 TEMPORARY SIGN STANDARDS

Sign Type	Permit Required	Use Restriction	Maximum Number	Maximum Area/ Size	Maximum Duration
Small Commercial Signs - Flags - Pennants - Painted windows	None	Non-residential uses only	No maximum	0.5 sq. ft. per linear business frontage; 30 sq. ft. max; 1/3 of window max	30 continuous calendar days; no more than 60 days each calendar year
Commercial Banner Signs	Administrative Sign Permit	Non-residential uses only	1 per 500 ft. of linear site frontage; 2 sign maximum	30 sq. ft.	30 continuous calendar days; no more than 60 days each calendar year
Balloon Signs	None	Associated with public, private, or sales event	10 per property	15 inches diameter	30 continuous calendar days; no more than 60 days each calendar year
Construction Site Signs - Residential	Administrative Sign Permit	Non-residential uses only	1 per 500 ft. of linear site frontage; 2 sign maximum	Height: 5 ft. Area: 12 sq. ft.	From issuance of building permit to completion of construction
Construction Site Signs - Non-Residential	Administrative Sign Permit	Commercial and industrial uses only	1 per 500 ft. of linear site frontage; 2 sign maximum	Height: 8 ft. Area: 40 sq. ft.	From issuance of building permit to completion of construction
For Sale, Lease, and Rent Signs, Non-Residential	None	Commercial and industrial uses only	1 per 500 ft. of lineal site frontage to a maximum of 2 signs	Height: 8 ft. Area: 40 sq. ft.	1 year; Director may approve one 180-day extension
For Sale, Lease, and Rent Signs, Residential	None	Residential uses only	1 per property	Height: 4 ft. Area: 6 sq. ft.	180 days; Director may approve one 90-day extension
Open House or model home	None	None	1 per property	Height: 4 ft. Area: 6 ft.	Limited to day of open house.
Residential Subdivision	Administrative Sign Permit	Residential subdivisions and condominiums located in the city	1 per subdivision	Height: 10 ft. Area: 40 sq. ft.	180 days or upon the sale of the last unit, whichever comes first

Attachment: Draft Zoning Code Public Review 02.04.2016 (1392 : Zoning Code Update)

17.80.120 Adjustment to Sign Standards

Note: Ability for the Planning Commission to approve modifications to certain sign standards are new.

This section establishes procedures to allow the Planning Commission to approve signs that deviate from certain standards to provide reasonable flexibility in the administration of the sign ordinance.

A. Permit Required. Adjustments to sign standards allowed by this section requires Planning Commission approval of a Sign Permit.

B. Permitted Adjustments. The Planning Commission may allow adjustment to the following sign standards:

1. The type of sign allowed in non-residential zoning districts (e.g.., awning signs, monument signs).
2. Requirements for temporary signs.
3. The maximum permitted sign area up to a 25 percent increase.
4. The maximum permitted sign height up to 25 percent increase.

C. Excluded Adjustments. The Planning Commission may not use the sign standards adjustment process to approve deviations to the following sign standards:

1. Prohibited Signs (Section 17.80.060).
2. General Sign Standards (Section 17.80.070).
3. Maximum number of signs allowed per property.
4. Residential signs (Section 17.80.100).

D. Findings. The Planning Commission may approve an adjustment to sign standards as allowed by this section if the following findings can be made in addition to findings required to approve Sign Permit applications:

1. The sign will be compatible with adjacent structures and uses and is consistent with the character of the neighborhood or district where it is located.
2. The sign will not adversely impact neighboring properties or the community at large.
3. The adjustment is necessary due to unique characteristics of the subject property, structure, or use.
4. The sign will be consistent with the purpose of the zoning district, the General Plan, Local Coastal Program, and any adopted area or neighborhood plan.
5. The adjustment will not establish an undesirable precedent.

Attachment: Draft Zoning Code Public Review 02.04.2016 (1392 : Zoning Code Update)

17.80.130 Master Sign Program

A. Purpose. The purpose of the Master Sign Program is to provide a coordinated approach to signage for multi-family development and multi-tenant commercial developments.

B. Applicability. A Master Sign Program is required for multi-family uses with more than one permanent sign proposed, and any non-residential development with four or more tenants.

C. Permit Required. A Master Sign Program requires Planning Commission approval of a Sign Permit.

D. Applications. Applications shall be filed with the Planning Department on the appropriate City forms, together with all the necessary fees, deposits, exhibits, maps, and other information required by the Department to clearly and accurately describe the proposed Master Sign Program.

E. Master Sign Program Contents. All Master Sign Programs shall identify the materials, color, size, type, placement and general design of signs located on a project or property.

Note: Design standards for master sign programs in Subsection F below which allow variety in the design of individual signs are new.

F. Design Standards.

1. Master Sign Programs shall feature a unified and coordinated approach to the materials, color, size, type, placement and general design of signs proposed for a project or property. Master Sign Programs may allow for variety in the design of individual signs provided that the signs contribute to a consistent visual theme within the property.
2. A Master Sign Program may deviate from standards contained in this chapter relating to permitted sign height, number of signs, sign area, and type of sign. A Master Sign Program may not allow a prohibited signs as identified in Section 17.80.060 (Prohibited Signs).

G. Effect of Master Sign Program.

1. All subsequent signs proposed for a development or property subject to an approved Master Sign Program shall comply with the standards and specifications included in the Master Sign Program.
2. Signs consistent with an approved Master Sign Program are allowed with an Administrative Sign Permit.
3. Approval of a Master Sign Program shall supersede the regulations of this chapter. Any aspect of the proposed signs not addressed by the Master Sign Program shall be in compliance with this chapter.

17.80.140 Nonconforming Signs

This section applies to all legally-established signs that do not conform to current requirements in this chapter.

Attachment: Draft Zoning Code Public Review 02.04.2016 (1392 : Zoning Code Update)

A. Continuation. A nonconforming sign may continue its use as a sign if it was legally established in compliance with all applicable regulations in effect at the time it was established. It is the applicant's responsibility to demonstrate that the sign was legally established.

B. Allowed Changes.

1. Changes to sign copy/face and repainting of legal nonconforming signs is permitted as long as there is no alteration to the physical structure or support elements of the sign.
2. A legal-nonconforming sign that sustains less than 50-percent damage to its structure may be repaired to its original pre-damaged condition, provided that such repair is completed within 180 days after the date of the damage.

Note: Requirements to bring nonconforming signs into compliance in Subsection C below are new.

C. Required Compliance. A legal nonconforming sign shall be removed or brought into compliance with this chapter in the following situations:

1. The use advertised by the sign has ceased to function for a period of 90 days or more.
2. The sign has sustained at least 50-percent damage to its structure.
3. The sign is located on a remodeled building façade.
4. The sign is relocated to a different lot or building.

17.80.150 Violations and Enforcement

Note: This section adds more detailed procedures for the removal of illegal signs currently addressed in Sections 17.57.130 and 140 of the existing Zoning Code.

A. Illegal Signs. It is unlawful for any person to install, place, construct, repair, maintain, alter or move a sign in a manner that does not comply with the requirements of this chapter.

B. Removal of Illegal Signs.

1. The City may immediately remove or cause the removal of any sign that places the public in immediate peril or that is located within the public right-of-way.
2. For illegal signs that do not place the public in immediate peril and are located on private property, the City shall serve the business owner or person responsible for the sign a written certified notice that:
   a. Describes the physical characteristics of the subject sign.
   b. Explains the nature of the violation.
   c. States that the sign shall be removed or brought into compliance with this article within a specified number of days after the notice is received.

Attachment: Draft Zoning Code Public Review 02.04.2016 (1392 : Zoning Code Update)

d. States that the City will remove the sign if the business owner or person responsible for sign does not correct the violation within the specified number of days after the notice is received.

e. States that the City may destroy the illegal sign if it is not retrieved within 20 days of removal by the City.

f. States that the business owner or person responsible for all costs associated with the removal, storage, and destruction of the sign.

3. If an illegal sign is not removed or brought into compliance within the specified number of days after a notice is received, the City may issue a citation to the business owner or person responsible for the sign as provided in Municipal Code Title 4 (General Municipal Code Enforcement) and may remove or cause the removal of the sign.

4. Any accessory structures. Foundations, or mounting materials which are unsightly or a danger to the public health, safety, and welfare shall be removed at the time of the sign removal.

5. A sign removed by the City shall be stored for a minimum of 20 days. If the sign is not retrieved by the business owner or person responsible for the sign within this 20-day period, the City may destroy the sign.

Attachment: Draft Zoning Code Public Review 02.04.2016 (1392 : Zoning Code Update)

Chapter 17.84 – HISTORIC PRESERVATION

Sections:

17.84.010 Purpose
17.84.020 Types of Historic Resources
17.84.030 Adding or Removing Historic Landmark Designation
17.84.040 Maintenance of Historic Structures List
17.84.050 Criteria for Designating Historic Resources
17.84.060 Certificate of Appropriateness
17.84.070 Historic Preservation Incentives
17.84.080 Demolition of Historic Resources

Note: This chapter is new to codify current practices and establish clear procedures to approve modifications to historic resources.

17.84.010 Purpose

This chapter establishes procedures for the designation of historic resources and requirements for alterations to these resources. These provisions are intended to preserve and enhance Capitola's historic character while maintaining the ability of property owners to reasonably improve and modify historic homes and structures in Capitola.

17.84.020 Types of Historic Resources

The Zoning Code establishes two types of historic resources: Historic Landmarks and properties included in the Historic Structures List.

A. Historic Landmarks. Historic landmarks include the following:

1. Resources listed on the National Register of Historic Places or determined by the State Historical Resources Commission to be eligible for listing on the National Register of Historic Places.
2. Resources listed on the California Register of Historical Resources or determined by the State Historical Resources Commission to be eligible for listing on the California Register of Historical Resources.
3. A contributing structure within a National Register Historic District (Venetian Court, Six Sisters, Lawn Way, and Old Riverview Districts).
4. Other resources officially designated by the City Council as a local historic landmark based on the criteria in Section 17.84.050 (Criteria for Designating Historic Resources).

B. Historic Structures List. The Historic Structures List is the 2005 City of Capitola Historic Structures List as maintained by the Community Development Department consistent with Section 17.84.040 (Maintenance of Historic Structures List). The purpose of the Historic Structures List is to maintain an inventory of properties that are

Attachment: Draft Zoning Code Public Review 02.04.2016 (1392 : Zoning Code Update)

potentially historic for use by City staff when reviewing development project applications.

17.84.030 Adding or Removing Historic Landmark Designation

A. Initiation. The City Council, Planning Commission, or property owner may request designating a property as a Historic Landmark or removing such designation from a property.

B. Application Contents. An application by a property owner shall be on a form designated by the Community Development Department and shall include the following information:

1. **Photographs – Subject Property, & Context.**
   a. Photographs of each exterior elevation of all buildings and structures on the site, including retaining walls and fences.
   b. Photographs of exterior details (façade materials, porches, columns, cornices, window trim, wall materials, and fence materials).
   c. Historic photographs of original structure if available.
2. **Physical Condition – Written and Graphic.** A detailed written description on the physical condition of the structure with supporting photographs.
3. **Property History**. A description of the history of the property, if known.
4. **Requests to Remove Designation**. For requests to remove a Historic Landmark designation, a description and photo documentation of the lack of historic significance and major alterations made to the property.
5. **Additional Information.** Any additional information requested by the Community Development Director necessary to process and evaluate the application.

C. Application Review. The Community Development Director shall review applications for adequacy and completeness under the requirements of this section. The application shall be reviewed by a State Certified Architectural Historian to assess whether the property exhibits characteristics for designation as a Historic Landmark described in Section 17.84.050 (Criteria for Designating Historic Resources). A staff report with a recommendation on the approval, approval with conditions, or denial of the application based upon the evaluation of the proposed historic resource designation shall be prepared by the Community Development Department for Planning Commission consideration.

D. Planning Commission Recommendation. The Planning Commission shall review a Historic Landmark application at a noticed public hearing in compliance with Chapter 17.120 (Public Notice and Hearings) and provide a recommendation to approve, conditionally approve, or deny the application.

Attachment: Draft Zoning Code Public Review 02.04.2016 (1392 : Zoning Code Update)

E. City Council Action. The City Council shall approve, conditionally approve, or deny the application by resolution. The action of the City Council is final.

F. Effect of Designation. The designation of a Historic Landmark shall run with the land and be binding to subsequent owners of the property. Upon designation, the City shall record with the County Recorder a Notice of Historic Landmark Designation.

17.84.040 Maintenance of Historic Structures List

A. Authority to Maintain. The Community Development Director shall be responsible for maintaining the Historic Structures List. The Director may add or remove structures from the list based on input from a State Certified Architectural Historian and the City Historian.

B. Additions to List. Any structure added to the Historic Structures List shall meet one or more of the criteria in Section 17.84.050.B (Historic Structures List). The property owner shall be notified in writing of a decision to add a property to the list. Decisions of the Community Development Director to add a property to the list may be appealed to the Planning Commission.

C. Removal of Listed Structures. A property owner may request the removal of a property from the list Historic Structure List by submitting to the Community Development Department a written request accompanied by a description with photograph documentation explaining the property's lack of historic significance of the property. Decisions of the Community Development Director to maintain a structure on the list despite a request for its removal by the property owner may be appealed to the Planning Commission.

17.84.050 Criteria for Designating Historic Resources

A. Historic Landmark Designation. The City Council may designate a property as a Historic Landmark if it meets any of the following criteria:

1. It exemplifies or reflects special elements of the City's cultural, social, economic, political, aesthetic, engineering, architectural or natural history.
2. It is identified with persons or events significant in local, State or national history.
3. It embodies distinctive characteristics of a style, type, period or method of construction, or is a valuable example of the uses of indigenous materials or craftsmanship.
4. It is representative of the work of a notable builder, designer or architect.
5. It contributes to the significance of an historic area, being a geographically definable area possessing a concentration of historic or scenic properties or thematically related groupings of properties which contribute to each other and are united aesthetically by plan or physical development.

Attachment: Draft Zoning Code Public Review 02.04.2016 (1392 : Zoning Code Update)

B. Historic Structures List. Based on a recommendation from a State Certified Architectural Historian and the City Historian, the Community Development Director may add a structure to the Historic Structures List if it meets any of the above criteria for designating a Historic Landmark or any of the following criteria:

1. It has a unique location or singular physical characteristic or is a view or vista representing an established and familiar visual feature of a neighborhood, district, or the city.
2. It embodies elements of architectural design, detail, materials or craftsmanship that represent a significant structural or architectural achievement or innovation.
3. It is similar to other distinctive properties, sites, areas or objects based on an historic, cultural or architectural motif.
4. It is one of the few remaining examples in the City, region, State or nation possessing distinguishing characteristics of an architectural or historic type or specimen.

17.84.060 Certificate of Appropriateness

A. Purpose. A certificate of appropriateness is an approval required to alter the exterior of a historic resource.

B. When Required - Historic Landmarks. A certificate of appropriateness is required for any exterior alteration to a Historic Landmark as defined in Section 17.84.020 (Types of Historic Resources).

C. When Required - Historic Structures List. A certificate of appropriateness is required for an alteration to a property included in the City of Capitola Historic Structures List if:

1. The project requires a discretionary approval (e.g., Design Permit); and
2. The Community Development Director determines that the project may result in a significant adverse impact of a historic resource as defined in the California Environmental Quality Act (CEQA) Guidelines Section 15064.5. A structure found not to be historically significant through a historic evaluation does not require a certificate of appropriateness.

D. Assessment and Consultation – Historic Structures List.

1. A proposed alteration to a property on the Historic Structurers List that requires a discretionary permit will be reviewed by a State Certified Architectural Historian to assess if the project may result in a significant adverse impact of a historic resource. The Community Development Director shall use this assessment to determine if a certificate of appropriateness is required for the proposed project.

Attachment: Draft Zoning Code Public Review 02.04.2016 (1392 : Zoning Code Update)

2. The Community Development Director shall consult with the City Historian on all discretionary applications involving an alteration to a property included in the Historic Structures List.

E. Alteration Defined. As used in this chapter, "alteration" means any exterior change or modification to a structure, cutting or removal of trees and other natural features, disturbance of archeological sites or areas, and the placement or removal of any accessory structures affecting the exterior visual qualities of the property. Painting is not considered an alteration unless painted features are designated as significant or characteristic of a historic resource.

F. Exception for In-Kind Minor Replacements. A certificate of appropriateness is not required for minor replacements due to damage to windows, doors, trim, or other similar building elements. The replacement shall be in-kind, matching the original design in size, detail, materials, and function. To qualify for this exception, the applicant must provide evidence of original design and details of the in-kind replacement.

G. Review Authority. The Planning Commission shall take action on all applications for a certificate of appropriateness.

H. Application Requirements. Applications for a certificate of appropriateness shall be filed and reviewed in compliance with Chapter 17.112 (Permit Application and Review). The application shall include the information and materials required by the Community Development Department together with all required application fees.

I. Public Notice and Hearing. The Planning Commission shall consider applications for a certificate of appropriateness at a noticed public hearing in compliance with Chapter 17.148 (Public Notice and Hearings).

J. Findings for Approval. The Planning Commission may approve a certificate of appropriateness only if all of the following findings can be made:

1. The historic character of a property is retained and preserved. The removal of distinctive materials or alteration of features, spaces, and spatial relationships that characterize the property is avoided.
2. Distinctive materials, features, finishes, and construction techniques or examples of fine craftsmanship that characterize a property are preserved.
3. Any new additions complement the historic character of the existing structure. New building components and materials for the addition are similar in scale and size to those of the existing structure.
4. Deteriorated historic features are repaired rather than replaced. Where the severity of deterioration requires replacement of a distinctive feature, the new feature matches the old in design, color, texture, and, where possible, materials.
5. Chemical or physical treatments are undertaken using the gentlest means possible. Treatments that cause damage to historic materials are not used.

6. Archeological resources are protected and preserved in place. If such resources must be disturbed, mitigation measures are undertaken.

7. The proposed project is consistent with the General Plan, any applicable Specific Plan, and the Zoning Code, and the California Environmental Quality Act (CEQA).

K. Conditions of Approval. The Planning Commission may attach conditions of approval to a certificate of appropriateness to achieve consistency with the General Plan, Local Coastal Program, Zoning Code, and any applicable specific plan or area plan adopted by the City Council.

L. Appeals. Decisions on certificate of appropriateness may be appealed as described in Chapter 17.152 (Appeals).

17.84.070 Historic Preservation Incentives

A. Mills Act Agreement. Upon request of the owner of a Historic Landmark, the City Council may elect to enter into a Mills Act Agreement with the owner. See Government Code Section 50280 et seq. The Mills Act Agreement shall run with the land and be binding upon subsequent owners of the Historic Landmark. If the City Council elects to enter into a Mills Act Agreement, the City shall file the Mills Act Agreement for recording with the County Recorder.

B. California Historical Building Code. The California Historical Building Code (Title 24, Part 8) shall apply to all properties designated as Historic Landmarks to facilitate the preservation and continuing use of the building while providing reasonable safety for the building's occupants and access for persons with disabilities.

C. Grant or Loan Priority. The City shall give the highest priority to Historic Landmarks when distributing grants or loans whose purpose is historic preservation.

D. Permitting Fees. The City Council may waive application and review fees for any permit required for development projects involving the substantial preservation or rehabilitation of a historic resource.

E. Modifications to Development Standards. The City Council may approve modifications to development standards in the applicable zoning district if the modification is necessary to allow for the preservation, rehabilitation, or restoration of a historic resource.

17.84.080 Demolition of Historic Resources

A. Permit Required. The demolition of a historic resource requires approval of a Historic Resource Demolition Permit.

B. Review Authority.

Attachment: Draft Zoning Code Public Review 02.04.2016 (1392 : Zoning Code Update)

1. The City Council takes action on Historic Resource Demolition Permits applications to demolish a Historic Landmark.
2. The Planning Commission takes action on Historic Resource Demolition Permit applications to demolish a structure on the Historic Structures List.

C. Application Submittal and Review. Applications for a Historic Resource Demolition Permit shall be filed and reviewed in compliance with Chapter 17.112 (Permit Application and Review). The application shall include the information and materials required by the Community Development Department together with all required application fees. It is the responsibility of the applicant to provide evidence in support of the findings required by Section 17.84.060.5 (Findings for Approval).

D. Planning Commission Recommendation. For Historic Resource Demolition Permit applications to demolish a Historic Landmark, the Planning Commission shall provide a recommendation to the City Council on a Historic Resource Demolition Permit at a noticed public hearing in compliance with Chapter 17.148 (Public Notice and Hearings). The Planning Commission shall base its recommendation on the findings specified in Paragraph F (Findings for approval) below.

E. Public Notice and Hearing. The review authority shall review and act on a Historic Resource Demolition Permit at a noticed public hearing in compliance with Chapter 17.148 (Public Notice and Hearings).

F. Findings for Approval. To approve a Historic Resource Demolition Permit, the review authority shall make one or more of the following findings:

1. The structure must be demolished because it presents an imminent hazard to public health and safety as determined by a licensed structural engineer.
2. The structure proposed for demolition is not structurally sound despite evidence of the applicant's efforts to rehabilitate and properly maintain the structure.
3. The rehabilitation or reuse of the structure is economically infeasible. Economic infeasibility shall be demonstrated by preparing actual project costs and by comparing the estimated market value of the property in its current condition, after rehabilitation and after demolition.
4. There exist no feasible alternative use of the structure that can earn a reasonable economic return.

G. Limitations on Findings of Economic Hardship. The review authority may not approve a Historic Resource Demolition Permit if an economic hardship was caused by any of the following:

1. Willful or negligent acts by the applicant.
2. Purchasing the property for substantially more than market value.
3. Failure to perform normal maintenance and repairs.
4. Failure to diligently solicit and retain tenants.

Attachment: Draft Zoning Code Public Review 02.04.2016 (1392 : Zoning Code Update)

5. Failure to prescribe a rental amount which is reasonable for the current market.
6. Failure to provide normal tenant improvements.

H. Post-Decision Procedures. Post-decision procedures and requirements in Chapter 17.156 (Post-Decision Procedures) shall apply to Historic Resource Demolition Permit.

Attachment: Draft Zoning Code Public Review 02.04.2016 (1392 : Zoning Code Update)

Chapter 17.88 – INCENTIVES FOR COMMUNITY BENEFITS

Sections:

17.88.010 Purpose
17.88.020 Incentives Restricted to Added Benefits
17.88.030 Allowable Benefits
17.88.040 Available Incentives
17.88.050 Relationship to State Density Bonus Law
17.88.060 Application Submittal and Review
17.88.070 Public Notice and Hearing
17.88.080 Findings
17.88.090 Post-Decision Procedures

Note: This chapter is new to implement General Plan policies that allow for increased FAR and height for certain projects on 41st Avenue.

17.88.010 Purpose

This chapter establishes incentives for applicants to locate and design development projects in a manner that provides substantial benefits to the community.

17.88.020 Incentives Restricted to Added Benefits

The City may grant incentives only when the community benefits or amenities offered are not otherwise required by the Zoning Code or any other provision of local, State, or federal law.

17.88.030 Allowable Benefits

The City may grant incentives for projects fronting 41st Avenue or the 41st Avenue/Capitola Road intersection in the Regional Commercial (C-R) and Community Commercial (C-C) zoning districts that provide one or more of the following community benefits:

A. Public Open Space. Public plazas, courtyards, and other public gathering places that provide opportunities for people to informally meet and gather. Open space must be accessible to the general public at all times. Provision must be made for ongoing operation and maintenance in perpetuity.

B. Public Infrastructure. Improvements to streets, sidewalks, curbs, gutters, sanitary and storm sewers, street trees, lighting, and other public infrastructure beyond the minimum required by the City or other public agency.

C. Capitola Mall Block Pattern. Subdivision of the existing Capitola Mall property into smaller blocks with new intersecting interior streets. May include the extension of 40th Avenue south into the Mall property to form a new pedestrian-friendly private interior street.

D. Surface Parking Lot Redevelopment. Redevelopment of existing surface parking lots fronting 41st Avenue and Capitola Road with new sidewalk-oriented commercial uses.

E. Transit Center. Substantial infrastructure improvements to the transit center on the Capitola Mall property that are integrated with a possible future shuttle system in Capitola. The transit

Attachment: Draft Zoning Code Public Review 02.04.2016 (1392 : Zoning Code Update)

center may be moved to an alternative location consistent with the operational requirements of Santa Cruz Metro.

F. Affordable Housing. Affordable housing that meets the income restrictions applicable in the Affordable Housing (-AH) overlay zone.

G. Pedestrian and Bicycle Facilities. Improved walkways and paths within properties, enhanced connections for bicyclists and pedestrians between properties, and new connections to the Rail Trail.

H. Public Parking Structure. Structured parking made permanently available for public use.

I. Green Building. Green building and sustainable development features that achieve or exceed the City's green building award status.

J. Public Art. Public art placed in a prominent and publicly accessible location.

K. Job Creation. New employment uses that increase the supply of jobs available to Capitola residents of all income levels.

L. Other Community Benefits. Other community benefits not listed above as proposed by the applicant that are significant and substantially beyond normal requirements.

17.88.040 Available Incentives

A. Incentives. A proposed project in the Regional Commercial (C-R) or Community Commercial (C-C) zoning district providing benefits is eligible for the following incentives:

1. An increase in the maximum permitted floor area ratio (FAR) to 2.0.
2. An increase in the maximum permitted building height to 50 feet.

B. Setback Requirement. An increase in the maximum permitted FAR or height is permitted on the east side of 41st Avenue only if structures are set back a minimum of 100 feet from the property line abutting a residential property.

17.88.050 Relationship to State Density Bonus Law

The incentives allowed by this section are in addition to any development incentive required by Section 65915 of the California Government Code.

17.88.060 Application Submittal and Review

A. **Review Authority.** The City Council shall review and act on any request to receive incentives in exchange for benefits. The City Council shall also review and act on other permits required for the project requesting incentives.

B. **Preliminary Input.** At any point prior to a final decision on a proposed project, an applicant may seek non-binding input from the City Council as to whether the request for incentives is worthy of consideration.

C. **Request Submittal.** A request for an incentive in exchange for benefits shall be submitted concurrently with an application for the discretionary permits required for the project by the Zoning Code. Applications shall be accompanied by the following information:

1. A description of the proposed amenities and how they will benefit the community.
2. All information needed by the City Council to make the required findings described in Section 17.88.080 (Finding) below, including a pro forma analysis demonstrating that the benefit of the proposed amenities to the community is commensurate with the economic value of the requested incentives.

17.88.070 Public Notice and Hearing

A. Planning Commission Recommendation. The Planning Commission shall provide a recommendation to the City Council on the proposed project and requested incentives at a noticed public hearing in compliance with Chapter 17.148 (Public Notice and Hearings).

B. City Council Action. After receiving the Planning Commission's recommendation, the City Council shall review and act on the proposed project and requested incentives at a noticed public hearing in compliance with Chapter 17.148 (Public Notice and Hearings).

17.88.080 Findings

The City Council may approve the requested incentives only if the following findings can be made in addition to the findings required for any other discretionary permit required by the Zoning Code:

A. The proposed amenities will provide a substantial benefit to the community and advance the goals of the General Plan.

B. There are adequate public services and infrastructure to accommodate the increased development potential provided by the incentive.

C. The benefit of the proposed amenities to the community is commensurate with the economic value of the requested incentive.

17.88.090 Post-Decision Procedures

Post-decision procedures and requirements in Chapter 17.156 (Post-Decision Procedures) shall apply to decisions on incentives for community benefits.

Attachment: Draft Zoning Code Public Review 02.04.2016 (1392 : Zoning Code Update)

Attachment: Draft Zoning Code Public Review 02.04.2016 (1392 : Zoning Code Update)

Chapter 17.92 – NONCONFORMING PARCELS, USES, AND STRUCTURES

Sections:

17.92.010 Purpose
17.92.020 Applicability
17.92.030 General
17.92.040 Nonconforming Parcels
17.92.050 Nonconforming Use of Land
17.92.060 Nonconforming Use of Structures
17.92.070 Nonconforming Multi-Family Uses in the R-1 Zoning District
17.92.080 Nonconforming Structures
17.92.090 Findings

17.92.010 Purpose

This chapter establishes regulations for nonconforming parcels, uses and structures. These regulations are intended to:

A. Allow for the development and use of legal nonconforming parcels.

B. Ensure that nonconforming uses and structures do not adversely impact neighboring properties.

C. Allow for the limited enlargement or intensification of nonconforming uses and structures.

D. Allow for the replication of detached single-family homes to support improvements to the City's housing stock while maintaining Capitola's unique coastal village character.

E. Allow for limited repairs and maintenance to nonconforming structures.

F. Provide for the elimination of nonconforming uses as appropriate due to abandonment, obsolescence, and destruction.

17.92.020 Applicability

This chapter applies to existing parcels, uses, and structures that do not conform to the regulations of the zoning district in which they are located.

17.92.030 General

A. Continuation. A nonconforming parcel, use, or structure may be continued if it was legally established in compliance with all applicable regulations in effect at the time it was established.

B. Legally Established Defined. To be considered legally established, a legal nonconforming parcel, use, or structure shall have been physically constructed or in

Attachment: Draft Zoning Code Public Review 02.04.2016 (1392 : Zoning Code Update)

existence, not merely approved by the City. Conditional Use Permits, Variances, Building Permits, or other approvals not exercised within the required time do not establish the right to a legal nonconformity.

C. Burdon of Proof. Any person asserting a right to a nonconforming parcel, use or structure has the burden of proof to demonstrate that the nonconformity was legally established.

17.92.040 Nonconforming Parcels

A. Development Permitted. A legally established parcel with nonconforming dimensions (e.g., parcel width and depth) is permitted all development rights of the applicable zoning district.

B. Conformance with Standards. New development on legal nonconforming parcels shall comply with all setback, building coverage, parking, and other standards of the applicable zoning district.

17.92.050 Nonconforming Use of Land

A. Continuation Permitted. A nonconforming use of land conducted outside of a structure may continue so long as:

1. The nonconforming use is not enlarged, increased, or extended to occupy a greater area of land; and
2. The nonconforming use is not moved in whole or in part to any other portion of the parcel.

B. Cessation of Use. If any such nonconforming use of land ceases for a period of more than 90 consecutive days, any subsequent use of such land shall conform to the regulations of the applicable zoning district.

17.92.060 Nonconforming Use of Structures

A. Change in Ownership, Tenancy, or Management. A change in ownership, tenancy, or management of a nonconforming use shall not affect its legal nonconforming status.

B. Resuming a Nonconforming Use. A nonconforming use changed to a conforming use shall not return to a nonconforming use.

C. Replacement of a Nonconforming Use. A nonconforming use may not be replaced by another nonconforming use.

D. Intensification of Use.

1. The enlargement of a structure or parcel occupied by a nonconforming use, or the intensification in any way of the operation of a nonconforming use, requires the approval of a Conditional Use Permit.

Attachment: Draft Zoning Code Public Review 02.04.2016 (1392 : Zoning Code Update)

2. To approve a proposed intensification to a nonconforming use, the Planning Commission shall make all Conditional Use Permit findings (Chapter 17.124) in addition to the findings in Section 17.92.080 (Findings).

3. **Discontinuation of Use.** A nonconforming use discontinued for 90 consecutive days shall not be reestablished and may be replaced only by a conforming use.

E. Nonconforming Multi-Family Uses. Nonconforming multi-family uses in the Residential Single Family (R-1) zoning district shall comply Section 17.92.070 (Nonconforming Multi-Family Uses).

17.92.070 Nonconforming Multi-Family Uses in the R-1 Zoning District

This section applies to multi-family uses that are nonconforming due to their location in the Residential Single Family (R-1) zoning district

A. Amortization. A nonconforming multi-family use in the R-1 zoning district must be discontinued on June 26, 2019 or 50 years from the date the use first became nonconforming, whichever is later, except as provided in subsections B and C below.

B. Amortization Extensions.

1. An owner of a nonconforming multi-family use may apply to the City Council for an extension to the 50-year amortization requirement in Section A above.

2. The City Council may grant an extension of up to 25 years upon finding that:

   a. The appearance, condition and management of the property is such that the property is not greatly detrimental to the single-family residential character of the neighborhood in which it is located;

   b. The extension is necessary in order to prevent a major economic loss to the property owner and to lessen deterioration; and

   c. All reasonable conditions have been imposed for the purpose of repairing dilapidation and bringing, or keeping, the property up to neighborhood standards.

3. The multi-family use must be discontinued upon completion of the extended amortization period granted by the City Council. In such cases, the property may continue as a residential use only if converted to a single-family dwelling. A property may not apply for another extension upon the completion of the amortization period.

Note: Incentives for property improvement in Subsection C below are new.

C. Incentives for Property Improvement.

1. **Incentive Program.** To encourage upgrades and improvements to non-conforming multi-family uses in the R-1 zoning district, the City Council may grant permanent legal status to properties that participate in the City's nonconforming

Attachment: Draft Zoning Code Public Review 02.04.2016 (1392 : Zoning Code Update)

multi-family improvement incentive program. Properties that participate in the incentive program are exempt from the amortization requirement established in Sections A and B above.

2. **Submittal Requirements.** To participate in the incentive program, a property owner shall prepare and submit to the City a property improvement plan that contains the following:

   a. A general description of the property, including property ownership, current and prior uses on the property, history of property improvements and maintenance, and aspects of the property that do not comply with current zoning regulations.

   b. Proposed improvements to bring the property into greater compliance with development standards required by the Zoning Code, including parking and landscaping requirements. These improvements may include reduction of the number of units on the property.

   c. A description of any neighborhood compatibility concerns associated with the property, including parking, noise, property maintenance, and refuse and recycling storage issues.

   d. Proposed property improvement and maintenance measures to address any neighborhood compatibility concerns.

   e. Documentation of outreach to neighbors to gather information about neighborhood compatibility concerns and possible methods to address these concerns.

3. **Measures to Compensate for Impacts.** A property owner may also propose additional measures that would provide a community benefit to compensate for impacts from the nonconforming use that cannot be fully mitigated. For example, a property owner may propose providing units as deed-restricted affordable housing or installing green building upgrades beyond the minimum required by the City or other public agency.

4. **City Review.** The Community Development Director, in consultation with the Public Works Director, shall review the property improvement plan and determine if the plan correctly identifies issues associated with the property and adequately proposes improvements to address these issues. The Community Development Director shall forward to the Planning Commission and City Council a recommendation on the adequacy of the Plan.

5. **Property Improvement Agreement and Schedule.** The property improvement plan shall identify a realistic schedule to complete all proposed improvements within 2 years of City Council approval. The property owner shall enter into a property improvement agreement with the City agreeing to complete all proposed improvements within this established schedule.

Attachment: Draft Zoning Code Public Review 02.04.2016 (1392 : Zoning Code Update)

6. **Findings.** At a noticed public hearing, the City Council may grant legal nonconforming status to a property upon finding that:

   a. The property improvement plan, when implemented, will adequately address any neighborhood compatibility concerns previously associated with the property.

   b. The property improvement plan incorporates adequate monitoring and maintenance provisions to ensure that neighborhood compatibility issues will not reoccur in the future.

   c. The location and size of the site is suitable and appropriate for a multi-family use.

   d. The property as improved will feature high quality design elements that complement the aesthetic qualities of the neighborhood.

   e. The property will not produce unreasonable privacy, noise, light, and air impacts on neighboring properties.

   f. Sufficient off-street parking is provided to accommodate parking needs of residents and minimize parking impacts on neighboring properties. Vehicles will not be parked in a manner that projects into adjacent sidewalks, streets, or otherwise interferes with vehicle and pedestrian circulation adjacent to the site.

   g. Refuse and recycling storage facilities are provided on-site and screened from view from neighboring properties and the street.

   h. The granting of legal status will not result in an excessive concentration of multi-family uses in the immediate vicinity of the property.

   i. Community benefits, if proposed, sufficiently compensate for impacts from the non-conforming use that cannot fully mitigated.

7. **Revocation.** The City may at any time revoke the legal status of the property if the property violates the improvement and maintenance agreement. Revocation shall occur in a manner consistent with Section 17.156.110 (Permit Revocation).

17.92.080 Nonconforming Structures

This section identifies allowed modifications to nonconforming structures, summarized in Table 17.92-1.

TABLE 17.92-1: ALLOWED MODIFICATIONS TO NONCONFORMING STRUCTURES

Project Affecting a Nonconforming Structure	Permit Required [1]
Nonstructural repairs, maintenance, and interior alterations	None
Structural repairs, modifications, and additions that do not alter or affect the nonconforming aspect of the structure	None

Attachment: Draft Zoning Code Public Review 02.04.2016 (1392 : Zoning Code Update)

Project Affecting a Nonconforming Structure	Permit Required [1]
Structural repairs, modifications, and additions that alter or affect the nonconforming aspect of the structure	Conditional Use Permit
Structural repairs, modifications, and additions that increase or exacerbate the nonconforming aspect of the structure	Variance
Replication of a single-family dwelling per 17.92.070.D	Conditional Use Permit
Recreation of an involuntarily damaged or destroyed structure	None

Notes:
[1] The proposed project may require permits and approvals for other reasons not related to its nonconforming status. For example, additions or enlargements to a single-family dwelling often requires a Design Permit.

A. Alterations Permitted By Right.

1. Maintenance, nonstructural repairs, and nonstructural interior alterations to any portion of a nonconforming structure are permitted if the changes and improvements do not enlarge or extend the structure.
2. Structural modifications to a nonconforming structure that do not alter or affect the nonconforming aspect of the structure are permitted. For example, an addition to a structure with a non-conforming setback is permitted if no structural changes are made to the portion of the structure projecting into the required setback, and if the addition complies with all setback, height, floor area ratio, and other applicable development standards.

B. Alterations Requiring a Conditional Use Permit.

1. Structural repairs and improvements that affect the nonconforming aspect of a nonconforming structure are allowed with a Conditional Use Permit if the improvement does not increase or exacerbate the nonconformity. For example, structural repairs to a building wall within a required setback are permitted with a Conditional Use Permit if the wall is not moved closer to the property line and the length of the wall within the required setback is not increased.
2. To approve such an alteration, the Planning Commission shall make all Conditional Use Permit findings (Chapter 17.124) in addition to the findings in Section 17.92.090 (Findings).

C. Substantial Demolition.

Note: Definition of a substantial demolition based on percent of building material removed replaces existing definition based on value of project in Section 17.72.070 of the existing Zoning Code.

1. If a nonconforming structure is substantially demolished as part of an alteration or addition, the structure shall be brought into full compliance with the requirements

Attachment: Draft Zoning Code Public Review 02.04.2016 (1392 : Zoning Code Update)

of the Zoning Code (i.e., legal nonconforming status shall be lost). Replicated single-family dwellings (Section D below) are exempt from this requirement.

2. A "substantial demolition" means the removal or replacement of:

   a. 50 percent or more of the lineal footage of existing interior and exterior walls; or

   b. 50 percent or more of the area of existing floor, ceilings, and roof structures.

3. Determination of a substantial demolition shall include all repairs, alterations, and additions cumulatively made to the property over the preceding 5 years.

D. Replication of Single-Family Dwellings.

Note: Ability to replicate nonconforming single-family dwellings in this section is new.

1. A nonconforming single-family dwelling may be replicated with the approval of a Conditional Use Permit. This provision is intended to allow for improvements to housing in Capitola in a manner that maintains the historic coastal village character of residential neighborhoods.

2. "Replication" means replacement of a demolished structure which recreates the original building footprint, mass, floor area, height, architectural design, materials, and arrangement of doors, windows, roof lines, and significant architectural features of the demolished structure to the greatest extent possible. Exact replication may not be possible due to the unavailability of matching materials and/or the necessity to meet current Building Code requirements.

3. A non-conforming single-family dwelling is not eligible for replication if the mass and floor area of the existing home can be reconfigured on the parcel in a manner consistent with the development standards of the applicable zoning district. Replication provisions are intended to apply only to homes on constrained parcels where compliance with applicable development standards is not feasible.

4. Deviations from the original building design that would reduce a nonconformity are allowed, and encouraged in cases where the deviation does not adversely impact the architectural integrity of the home.

5. To approve such a replication, the Planning Commission shall make all Conditional Use Permit findings (Chapter 17.124) in addition to the findings in Section 17.92.080 (Findings).

6. No additions or modifications that would increase the mass, floor area or height of a replicated nonconforming single-family dwellings are permitted for up to 10 years following approval of the replicated home.

E. Involuntary Damage or Destruction.

Attachment: Draft Zoning Code Public Review 02.04.2016 (1392 : Zoning Code Update)

1. Nonconforming structures damaged or destroyed by earthquake, fire, flood, or other calamity may be repaired or reconstructed provided that the nonconforming aspects of the structure are not increased or exacerbated.
2. "Reconstructed" means rebuilding a damaged or destroyed structure in a manner similar but not identical to the original structure. A reconstructed structure generally recreates the original building footprint, mass, and height, but may deviate from design details such as architectural design and the arrangement of doors, windows, and rooflines.
3. The repair or reconstruction of a nonconforming structure shall begin within one year and shall be completed within three years. The Community Development Director may approve an extension of two additional years to complete reconstruction of the demolished structure if the delay was caused by circumstances over which the applicant has no fault or control.

F. Moved Structures. A nonconforming structure that is moved to a new location shall conform to all applicable standards of the applicable zoning district.

17.92.090 Findings

Note: Findings for modifications to a nonconforming structure in this section are new.

The Planning Commission may approve a Conditional Use Permit for projects that alter or affect the nonconforming aspect of a structure and for the replication of a single-family dwelling if all of the following findings can be made in addition to the findings in Chapter 17.124 (Use Permits):

A. Available evidence indicates that the nonconforming use or structure was legally established.

B. The nonconforming use or structure has not resulted in a notable negative impact or nuisance on neighboring properties or to the surrounding area.

C. The nonconforming use or structure is compatible with the general character of the surrounding area.

D. The proposed action is consistent with the purpose and intent of the applicable zoning district.

Attachment: Draft Zoning Code Public Review 02.04.2016 (1392 : Zoning Code Update)

Chapter 17.96 – SUPPLEMENTAL STANDARDS

Sections:

17.96.010 Purpose
17.96.020 Animal Keeping
17.96.030 Emergency Shelters
17.96.040 Home Occupations
17.96.050 Intersection Sight Distance
17.96.060 Large Commercial Land Uses
17.96.070 Large Home Day Care
17.96.080 Large Residential Care Facilities
17.96.090 Offshore Oil Development Support Facilities
17.96.100 Permanent Outdoor Displays
17.96.110 Outdoor Lighting
17.96.120 Placement of Underground Utilities
17.96.130 Recycling Collection Facilities
17.96.140 Residential Mixed Use Development in Commercial Zoning Districts
17.96.150 Self-Storage Facilities
17.96.160 Solar Energy Systems
17.96.170 Soquel Creek Pathway, Bulkheads, and Decks
17.96.180 Temporary Sidewalk Dining
17.96.190 Temporary Uses and Structures
17.96.200 Unattended Donation Boxes

17.96.010 Purpose

This chapter establishes supplemental standards for land uses, activities, and development that apply in all zoning districts.

17.96.020 Animal Keeping

Note: Animal keeping standards in this section remove limitations on the number of permitted indoor domestic pets in existing Zoning Code Section 17.82.060. Subsections D (Honeybees) and E (Prohibited Animals) are new.

A. General Standards. The following standards apply to the keeping of all animals in Capitola.

1. **Public Health and Safety**. It shall be unlawful and shall constitute a nuisance to keep any animal that poses a threat to public health or safety.

2. **Animal Noise**. In addition to those in Municipal Code Chapter 9.12 (Noises), no animal may disturb neighbors with its noise between sunset and one-half hour after sunrise.

Attachment: Draft Zoning Code Public Review 02.04.2016 (1392 : Zoning Code Update)

3. **Sanitation**. It shall be unlawful and shall constitute a nuisance for any person to keep animals in an unsanitary manner or produce obnoxious odors. All debris, refuse, manure, urine, food waste, or other animal byproduct shall be removed from all the premises every day or more often as necessary.

B. Household Pets. The keeping of dogs, cats, domesticated birds, rodents, reptiles and amphibians, potbelly pigs less than 150 pounds, and other household pets is permitted provided they comply with Paragraph A above.

C. Chickens.

1. **Permitted Location**. Keeping of chickens is permitted only on properties occupied by a single-family dwelling.
2. **Prohibitions on Roosters**. Only hens are permitted pursuant to this chapter. Roosters are prohibited.
3. **Number of Chickens**. A maximum of four chickens are permitted on a single property.
4. **Enclosure Requirement**. Chickens shall be kept in a coop which is sufficient to contain chickens.
5. **Location of Coops**. Chicken coops shall not be located closer than 20 feet to dwelling units on adjacent properties.

D. Honeybees.

1. **Permitted Location**. Keeping of beehives is permitted only on properties occupied by a single-family dwelling.
2. **Minimum Lot Size and Number of Hives**. A maximum of one beehive is permitted on properties of at least 5,000 square feet.
3. **Location of Beehives**. Beehives shall be located behind the primary structure on the property. Beehives shall not be located closer than 20 feet to dwellings on adjacent properties or 5 feet from a property line.

E. Prohibited Animals. Keeping the following animals is prohibited:

1. Roosters, fowl other than chickens, goats, pigs other than potbelly pigs, and other livestock.
2. Wild animals as defined in Section 2118 of the California Fish and Game Code, except when authorized by the State Department of Fish and Game under Fish and Game Code Section 2150 et seq.

17.96.030 Emergency Shelters

Emergency shelters will comply with the following standards:

Attachment: Draft Zoning Code Public Review 02.04.2016 (1392 : Zoning Code Update)

A. Lighting. Adequate external lighting shall be provided for security purposes. The lighting shall be stationary, directed away from adjacent properties and public rights-of-way, and of an intensity compatible with the neighborhood.

B. Physical Characteristics. Emergency shelters shall comply with applicable State and local housing, building, and fire code requirements.

C. Security. Facilities shall have on-site security during hours of operation. Parking and outdoor facilities shall be designed to provide security for residents, visitors and employees.

D. Laundry Facilities. Facilities shall provide laundry facilities or services adequate for the number of residents.

E. Common Facilities. Facilities shall contain amenities appropriate to the population to be served to include the following:

1. Central cooking and dining room.
2. Recreation room.
3. Counseling services.
4. Child care facilities.
5. Other support services.

F. Outdoor Activity. For the purpose of noise abatement, organized outdoor activities may only be conducted between the hours of eight a.m. and ten p.m.

G. Refuse. Emergency shelters shall provide a refuse storage area that is in accordance with city requirements for accessory refuse structures. The storage area shall accommodate a standard-sized trash bin adequate for use on the parcel, or other enclosures as approved by the Community Development Director. The refuse enclosure shall be accessible to refuse collection vehicles.

H. Emergency Shelter Provider. The agency or organization operating the emergency shelter shall comply with the following requirements:

1. Temporary shelter shall be available to residents for no more than six months.
2. Staff and services shall be provided to assist residents to obtain permanent shelter and income.
3. The provider shall have a written management plan including, as applicable, provisions for staff training, good neighbor policies, security, transportation, client supervision, food services, screening of residents to insure compatibility with services provided at the facility, and for training, counseling, and treatment programs for residents. Such plan shall be submitted to and approved by the planning, inspections, and permitting department prior to operation of the emergency shelter. The plan shall include a floor plan that demonstrated compliance with the physical standards. The operator of each emergency shelter

shall annually submit the management plan to the planning, inspections and permitting department with updated information for review and approval. The City Council may establish a fee by resolution, to cover the administrative cost of review of the required management plan.

I. Limited Terms of Stay. The maximum term of staying at an emergency shelter is six months in a consecutive twelve-month period.

J. Transportation Plan. A transportation plan is required.

K. Parking. The emergency shelter shall provide on-site parking at a rate of one space per staff member plus one space per six occupants allowed at the maximum capacity.

L. Bicycle Parking. The shelter shall provide secure bicycle parking at a rate of one space per occupant.

M. Development Standards. An emergency shelter must comply with all development standards in the Industrial (I) zoning district.

17.96.040 Home Occupations

A. Required Permit. An Administrative Permit is required to establish or operate a home occupation.

B. Standards. All home occupations shall comply with the following standards:

Note: Size limitation for home occupations in paragraph 1 below is new.

1. **Size.** Home occupations may not occupy more than 25 percent of the floor area of the dwelling unit or 400 square feet, whichever is less.
2. **Sales and Displays.** Products may not be sold directly to customers within a home occupation. Home occupations may not establish window displays of products to attract customers.
3. **Advertising.** No newspaper, radio, or television service shall be used to advertise the location of business; however, contact information, including phone numbers and email address, are allowed on advertisements.
4. **Signs.** One single, non-illuminated, wall-mounted outdoor sign of not more than 1 square foot in area is permitted.
5. **Vehicle Traffic.** A home occupation may not generate vehicle traffic greater than normally associated with a residential use. No excessive pedestrian, automobile, or truck traffic introduced to the neighborhood as a result of the home occupation.
6. **Deliveries.** Deliveries and pick-ups for home occupations may not interfere with vehicle circulation, and shall occur only between 8:00 a.m. and 8:00 p.m., Monday through Saturday.

7. **Mechanical Equipment.** Mechanical equipment that is not normally associated with a residential use is prohibited.

8. **Performance Standards.** Home occupations shall not generate dust, odors, noise, vibration, or electrical interference or fluctuation that is perceptible beyond the property line.

9. **Hazardous Materials Prohibited.** The storage of flammable, combustible, or explosive materials is prohibited.

10. **Employees.** Employees of a home occupation shall be limited to the persons residing in the dwelling unit.

11. **On-Site Client Contact**. No more than one client/customer at the property at one time. Customer or client visits are limited to three per day, or six per day for personal instruction services (e.g., musical instruction or training, art lessons, academic tutoring)

12. **Outdoor Storage Prohibited.** Goods, equipment, and materials associated with a home occupation shall be stored within an enclosed structure or in a manner that is not visible from the property line.

C. Permit Revocation. An Administrative Permit for a home occupation that violates any of the standards in Paragraph B (Standards) above may be revoked consistent with Section 17.156.010 (Permit Revocation).

17.96.050 Intersection Sight Distance

A. Vision Triangle Required. In zoning districts which require a front and street side setback for primary structures, all corner parcels shall provide and maintain a clear vision triangle at the intersection of the streets' right-of-way and adjacent to driveways for the purpose of traffic safety.

B. Vision Triangle Defined.

1. **Intersections**. The intersection vision triangle shall be the area formed by measuring 30 feet along the major street front property line and 20 feet along the minor street property line from the point of intersection, and diagonally connecting the ends of the two lines. See Figure 17.96-1.

2. **Driveways**. The driveway vision triangle is the area formed by measuring 15 feet along the driveway and the street from the point of intersection, and diagonally connecting the ends of the two lines. See Figure 17.96-1.

C. Maintenance of Sight Lines.

1. No structure, vehicle, object, or landscaping over 30 inches in height may be placed within a vision triangle, except as allowed by subsection 2 below.

2. Trees pruned at least 8 feet above the established grade of the curb so as to provide clear view by motor vehicle drivers are permitted within a vision triangle.

Attachment: Draft Zoning Code Public Review 02.04.2016 (1392 : Zoning Code Update)

FIGURE 17-96-1: VISION TRIANGLES

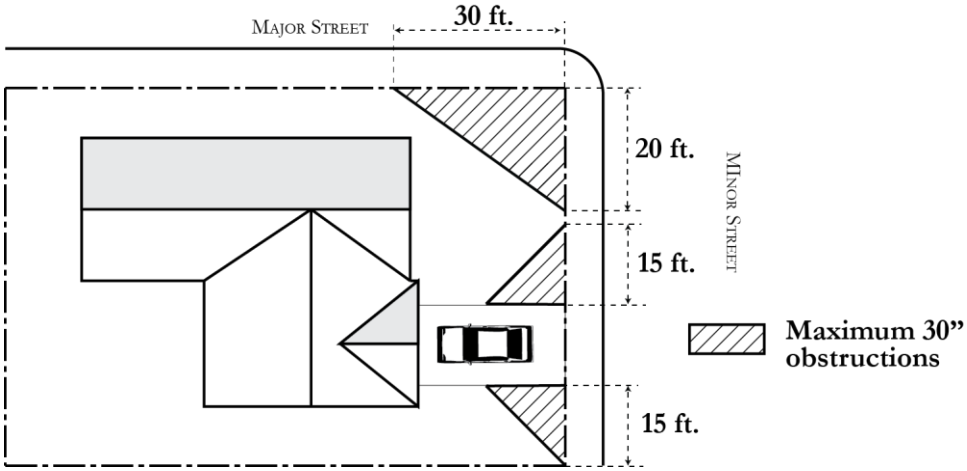

17.96.060 Large Commercial Land Uses

A. Purpose and Applicability. This section establishes special findings that the Planning Commission must make to approve a Conditional Use Permit for commercial land uses with more than 20,000 square feet of floor area within one or more buildings. This requirement applies to all proposed new commercial land uses except for uses already specifically approved in an applicable Master Conditional Use Permit pursuant to Section 17.124.100 (Master Use Permit).

> **Note:** Findings in subsection B below modifies criteria in existing Zoning Code section 17.60.030.D. Definition of large commercial land uses increased from 12,000 sq. ft. to 20,000 sq. ft.

B. Findings. To approve a Conditional Use Permit for a commercial land use with 20,000 square feet or more of floor area, the Planning Commission shall make the following findings in addition to the findings in Section 17.124.070 (Findings for Approvals):

1. Vehicle traffic and parking demand created by the proposed use will not have substantial adverse impacts on properties within the vicinity of the subject property.
2. The structure occupied with the proposed use is compatible with the scale and character of existing structures in the surrounding area.
3. The proposed use is compatible with existing land uses in the surrounding area.
4. The size of the proposed use is similar to the average size of similar uses located in the surrounding area.
5. The use will support the surrounding local economy and attract visitors to the commercial area.

Attachment: Draft Zoning Code Public Review 02.04.2016 (1392 : Zoning Code Update)

C. Purpose of Findings. The purpose of additional findings for large commercial uses is to enable the Planning Commission to ensure that all new uses and development are consistent with the General Plan and compatible with the character of existing neighborhoods and districts. These findings are not intended to involve the City in the normal competition that arises between similar businesses in Capitola.

17.96.070 Large Home Day Care

As allowed by Health and Safety Code Sections 1597.465 et seq., the City shall approve a large home day care if it complies with the following standards.

A. Care Provider Occupancy. The single-family home in which the large home day care is located shall be the principal residence of the care provider. The day care use shall be clearly residential in character and shall be accessory to the use of the property as a residence.

B. License. The care provider shall obtain and maintain a license from the State of California Department of Social Services.

C. Separation. A large home day care facility within a residential zoning district may not be located within 500 feet of another large day home care.

D. Yard Requirement. A large home day care shall either be located within the R-1 zoning district or shall have 75 square feet of outdoor activity space for each child. A large home day care outside the R-1 shall have an outdoor area owned or leased by the applicant and cannot be shared with other property owners unless permission is granted by the joint owners. The City may wave this space requirement if the applicant can demonstrate that there is a public park or other public open area that is in close proximity to the large home day care.

E. Screening. A fence or wall shall be located on all property lines or around all outdoor activity areas. The fence or wall shall comply with all applicable standards in Chapter 17.60 (Fences and Walls).

F. Noise. Outdoor activities may not occur before 7:00 a.m. or after 8:00 p.m. when the site is located within or adjacent to a residential zoning district.

G. Parking. Off-street parking shall be provided as required by Chapter 17.76 (Parking and Loading).

H. Garage. The garage shall be utilized for the parking of the property owner's vehicles. Use of the garage for the day care home function, such as for a play area, is not allowed.

I. Safety Compliance. The applicant is required to have the home inspected and submit a letter of compliance from the following:

1. **City Building Division.** The homes shall be inspected and brought into compliance with the building code relative to the proposed use.

Attachment: Draft Zoning Code Public Review 02.04.2016 (1392 : Zoning Code Update)

2. **Fire Marshal.** The home shall be inspected and brought into compliance with the California Health and Safety code related to the proposed use.

J. Pick-Up and Drop-Off Plan. The Community Development Director shall approve a plan for the pick-up and drop-off of children. The plan shall demonstrate that adequate parking and loading areas are available to minimize congestion and conflict on public streets. The plan shall include an agreement for each parent or client to sign that includes, at a minimum:

1. A scheduled time for pick-up and drop-off with allowances for emergencies; and
2. Prohibitions of double-parking, blocking driveways of neighboring properties, or using driveways of neighboring properties to turn around.

17.96.080 Large Residential Care Facilities

Large residential care facilities shall comply with the following standards:

A. Separation. A large residential care facility in a residential zoning district shall not be located within 500 feet of another large residential care facility.

B. Screening and Landscaping. A minimum six-foot-high solid wall or fence shall be provided for purposes of screening and securing outdoor recreational areas. Chain metal fencing and barbed wire are prohibited.

C. License. The care provider shall obtain and maintain a license from the State of California Department of Social Services. Large residential care facilities shall be operated according to all applicable State and local regulations.

D. Safety Compliance. The applicant is required to have the facility inspected and submit a letter of compliance from the following:

1. **City Building Department.** The facility shall be inspected and brought into compliance with the building code relative to the proposed use.
2. **Fire Marshal.** The facility shall be inspected and brought into compliance with the California Health and Safety code related to the proposed use.

17.96.090 Offshore Oil Development Support Facilities

Note: This section removes findings and other similar commentary from Chapter 17.93 of the existing Zoning Code.

A. Prohibition. There shall be no construction, reconstruction, operation, or maintenance of any commercial or industrial offshore oil development support facility within the City of Capitola.

B. Facilities and Activities Included in Prohibition. Prohibited facilities and activities include, but are not limited to:

Attachment: Draft Zoning Code Public Review 02.04.2016 (1392 : Zoning Code Update)

1. Oil or gas storage facilities, pipe and drilling materials, or equipment repair or storage facilities, which operates directly in support of any offshore oil or gas exploration, development, drilling, pumping or production.
2. Construction, reconstruction, or operation of facilities to process any oil or natural gas taken or removed from any offshore oil or gas drilling or pumping operations.

17.96.100 Permanent Outdoor Displays

Note: Citywide standards for permanent outdoor display of retail goods in this section are new.

A. Permitted Displays. A single permanent outdoor display of retail goods that complies with this section is permitted as an accessory use to a primary commercial use in the mixed use, commercial, and industrial zoning districts.

B. Permits Required.

1. A Conditional Use Permit is required for a permanent outdoor display in the MU-V zoning district.
2. Permanent outdoor displays located outside of the MU-V zoning district and consistent Paragraph D below are allowed with an Administrative Permit.

C. Exceptions to Standards. For permanent outdoor displays located outside of the MU-V zoning district, the Planning Commission may grant exceptions to the standards in Paragraph D below for with a Conditional Use Permit. No deviations from the standards in Paragraph D are allowed for permanent outdoor displays in the MU-V zoning district.

D. Standards.

1. **Height**. Displayed items shall not exceed 6 feet in height.
2. **Size**. Display areas are limited to 6 feet wide or 10 percent of the width of the front building elevation. A display area may extend a maximum of 3 feet from the front building wall.
3. **Goods Permitted**. Displayed items shall be of the same type that are lawfully displayed and sold inside the building occupied by the primary commercial use. Only the business or entity occupying the building may sell merchandise in an outdoor display area.
4. **Hours**. Items shall be displayed only during the operating hours of the primary commercial use. Items shall be removed from display and moved into a permanently enclosed structure upon close of business.
5. **Screening**. If outdoor display areas are proposed as part of a project subject to discretionary review and approval by the City, the review authority may require that display areas be screened from view from neighboring properties with a solid wall, fence, or landscaped berm.

Attachment: Draft Zoning Code Public Review 02.04.2016 (1392 : Zoning Code Update)

6. **Design Standards**.

   a. Outdoor displays shall be designed to enhance the shopping environment. The outdoor display shall be designed to complement the architecture of the building and public realm.

   b. Outdoor displays shall be self-supporting, stable, and constructed to withstand wind or contact. The display shall not be permanently affixed to any object, structure or the ground including utility poles, light poles, and trees.

   c. Outdoor displays may not contain any information which would routinely be placed on a business sign located on the building such as the name or type of business, hours of business operation, business logo, brand name information, etc. The outdoor display may include a sign which indicates the price of the display items or simply indicates a "sale" on the items limited in size to 4 square inches.

   d. Outdoor displays shall be continuously maintained in a state of order, security, safety and repair. The display surface shall be kept clean, neatly painted, and free of rust, corrosion, protruding tacks, nails and/or wires.

7. **Location.**

   a. All outdoor display area shall be located on the same parcel as the primary commercial use.

   b. Outdoor display areas may not be placed within any permanent landscaped area, required parking space, or loading area.

   c. No items may be displayed within the public right-of-way, including public sidewalks.

   d. Outdoor display areas may not be placed in a location that would cause a safety hazard, obstruct the entrance to a building, encroach upon driveways, or otherwise create hazards for pedestrian or vehicle traffic.

17.96.110 Outdoor Lighting

Note: Outdoor lighting standards in this section are new.

A. Purpose. This section establishes standards for outdoor lighting to minimize light pollution, maintain enjoyment of the night sky, and reduce light impacts on adjacent properties.

B. Applicability. The standards in this section apply to all outdoor lighting in Capitola except for:

1. Lighting installed and maintained by the City of Capitola or other public agency;

2. Athletic field lights used within a school campus or public or private park;

Attachment: Draft Zoning Code Public Review 02.04.2016 (1392 : Zoning Code Update)

3. Temporary construction and emergency lighting; and
4. Seasonal lighting displays related to cultural or religious celebrations.

C. Maximum Height. Lighting standards shall not exceed the maximum heights specified in the Table 17.76-1.

TABLE 17.96-1 MAXIMUM LIGHT STANDARD HEIGHT

Zoning District	Maximum Height
Residential Zoning Districts	16 ft.
Mixed Use and Commercial Zoning Districts	16 ft. within 100 ft. of any street frontage; 20 ft. in any other location
Industrial Zoning Districts	16 ft. within 100 ft. of any street frontage; 25 ft. in any other location
Community Facility and Parks/Open Space Zoning Districts	25 ft., or as necessary for safety and security

D. Prohibited Lighting. The following types of exterior lighting are prohibited:

1. Drop-down lenses;
2. Mercury vapor lights; and
3. Searchlights, laser lights, or any other lighting that flashes, blinks, alternates, or moves.

E. Fixture Types. All lighting fixtures shall be shielded so as not to produce obtrusive glare onto the public right-of-way or adjoining properties. All luminaires shall meet the most recently adopted criteria of the Illuminating Engineering Society of North America (IESNA) for cutoff or full cutoff luminaires

F. Light Trespass. Lights shall be placed to deflect light away from adjacent lots and public streets, and to prevent adverse interference with the normal operation or enjoyment of surrounding properties.

1. Direct or sky-reflected glare from floodlights shall not be directed into any other parcel or street.
2. No light or activity may cast light exceeding one foot-candle onto a public street, with the illumination level measured at the centerline of the street.
3. No light or activity may cast light exceeding one-half foot-candle onto a residentially zoned parcel or any parcel containing residential uses.

G. Required Documentation. Prior to issuance of building permits, project applicants shall submit to the City photometric data from lighting manufacturers demonstrating compliance with the requirements of this section.

17.96.120 Placement of Underground Utilities

A. When Required. New construction or additions that increase existing floor area by 25 percent or more shall place existing overhead utility lines underground to the nearest utility pole.

B. Exceptions. The Planning Commission may approve exceptions to this requirement if it determines a hardship exists. The Planning Commission may grant an exception due to unique physical conditions on the site or environmental considerations such as tree preservation or proximity to a watercourse, archaeological site, or other environmental resources. The Planning Commission may not grant an exception due to financial hardship.

17.96.130 Recycling Collection Facilities

All recycling collection facilities where permitted shall comply with the standards in this section.

A. Accessory Use. Recycling collection facilities may be established only as an accessory use in conjunction with an existing commercial or industrial use which complies with the Zoning Code and the Capitola Building and Fire Codes.

B. Maximum Size. Recycling collection facilities may occupy no more than 5,000 square feet of area on a property.

C. Parking Areas.

1. Recycling collection facilities shall provide parking for removal of the materials and for customers depositing the materials.
2. Occupation of parking spaces by the facility and by the attendant may not reduce available parking spaces below the minimum number required for the primary host use, unless a study shows that existing parking capacity is not already fully utilized during the time the recycling facility will be on the site.

D. Accepted Items. Recycling collection facilities may accept only glass, metal or plastic containers, papers and reusable items. Used motor oil may be accepted with a permit from the Santa Cruz County Environmental Health Department and the Hazardous Wastes Commission.

E. Power-driven Processing Equipment. Except for reverse vending machines, recycling collection facilities may not use power-driven processing equipment.

F. Location.

1. Mobile vending facilities shall be located in a designated area without eliminating the required parking or landscaping;
2. Containers for the 24-hour donation of materials shall be at least 30 feet from any property zoned or occupied for residential use, unless there is a recognized service corridor and acoustical shielding between the containers and the residential use.

Attachment: Draft Zoning Code Public Review 02.04.2016 (1392 : Zoning Code Update)

G. Maintenance. The site shall be maintained free of litter and any other undesirable materials. Mobile facilities, at which trucks or containers are removed at the end of each collection day, shall be swept at the end of each collection day.

H. Noise. Shall not exceed noise levels of 60 dBA as measured from the property line of residentially zoned or occupied property or otherwise shall not exceed seventy dBA.

I. Hours of Operation. Attended facilities located within 100 feet of a property zoned or occupied for residential use shall operate only during the hours of between nine a.m. and seven p.m.

J. Facility Information and Display.

1. Containers shall be clearly marked to identify the type of materials which may be deposited.
2. The facility shall be clearly marked to identify the name and telephone number of the facility operator and the hours of operation, and display a notice stating that no material shall be left outside the recycling enclosure or containers.

K. Signs. Signs may be provided as follows:

1. Recycling facilities may have identification signs with a maximum of 10 square feet, in addition to informational signs required by subsection J above.

L. Landscaping. The facility shall not violate any landscaping standards required by the Zoning Code or other City ordinance.

17.96.140 Residential Mixed Use Development in Commercial Zoning Districts

Note: Standards for residential mixed use development in commercial zoning districts in this section are new.

A. Purpose. This section establishes design standards for vertical mixed use development with housing above ground floor commercial uses in the commercial zoning districts. These standards are intended to promote successful mixed use development that is pedestrian-friendly and contributes to the vitality of commercial districts in Capitola.

B. Applicability. This section applies to all residential mixed use development in the Community Commercial (C-C) and Regional Commercial (C-R) zoning districts.

C. Standards.

1. **Ground Floor Uses.** Ground floor spaces fronting the primary street shall be occupied by retail, restaurant, and personal service uses that generate pedestrian activity.
2. **Building Placement**. Buildings shall be placed near the edge of the sidewalk. At all times there shall be at least 10 feet between the building wall and edge of sidewalk. Increased setbacks are permitted if they enhance pedestrian experience and add visual interest.

Attachment: Draft Zoning Code Public Review 02.04.2016 (1392 : Zoning Code Update)

3. **Building Orientation**. Buildings shall be oriented towards a public street with the primary entrance to the site or building directly accessible from an adjacent sidewalk. The Planning Commission may allow buildings and their primary entrances to be oriented toward a public space. The primary entrance to a building shall not be oriented towards surface parking.

4. **Blank Walls.** The length of an unarticulated/blank building wall shall not exceed 10 feet. Architectural articulation should have similar pattern as other adjacent buildings to provide cohesive design in the neighborhood. Building articulation may be provided by:

   a. Doors, windows, and other building openings;

   b. Building projections or recesses, doorway and window trim, and other details that provide architectural articulation and design interest;

   c. Varying wall planes, heights or contrasting materials and colors; and

   d. Awnings, canopies, or arcades to reinforce the pedestrian scale and provide shade and cover from the elements.

5. **Storefront Width.** The width of a single building/storefront shall not exceed 50 feet. Larger buildings shall be broken down into a pedestrian-scale rhythm with individual building bay width of 25 to 50 feet.

6. **Ground Floor Building Transparency.** The ground floor street-facing building walls of non-residential uses shall provide transparent windows or doors with views into the building for a minimum of 65 percent of the building frontage located between 2½ and 7 feet above the sidewalk. 65 percent of the transparent windows or doors area shall remain clear to allow views into the building. Exceptions to this transparency requirement may be allowed if the Planning Commission finds that:

   a. The proposed use has unique operational characteristics which preclude building openings, such as for a cinema or theatre; or

   b. Street-facing building walls will exhibit architectural relief and detail, and will be enhanced with landscaping in such a way as to create visual interest at the pedestrian level.

7. **Retail Location.** Retail shall be located in places that provide the highest likelihood of retail success over time. Visibility, accessibility, and proximity to existing retail all contribute to retail success in mixed use development.

8. **Retail Depth.** Ground floor commercial space shall have a depth of at least 45 feet or two-thirds of the parcel depth, whichever is less. Where possible, 60-foot depths are encouraged to accommodate a wider range of tenants, especially food tenants. The Planning Commission may grant an exception to the minimum retail depth requirement if the minimum retail depth is infeasible due to unusual physical conditions on the parcel.

Attachment: Draft Zoning Code Public Review 02.04.2016 (1392 : Zoning Code Update)

9. **Ground-Floor Height**. Ground floor commercial space shall have a minimum floor-to-floor height of 15 feet. Where possible, 18-foot floor-to-floor heights are encouraged.

10. **Parking Location.** No more than 10 percent of retail parking may be provided at the curb or adjacent to retail as "teaser" parking. The remainder of the parking shall be behind the building or in underground/structured parking.

11. **Driveways and Curb Cuts**. Pedestrian and vehicle conflicts shall be minimized by limiting the number of curb cuts to two per block and the width of curb cuts to 24 feet where feasible. To the extent possible, curb cuts shall be designed so pedestrian curb ramps are limited and pathways remain level as they cross the vehicle route.

17.96.150 Self-Storage Facilities

A. Purpose and Applicability. This section establishes special findings for the Planning Commission to approve self-storage facilities in the Community Commercial (C-C) and Regional Commercial (C-R) zoning districts. These findings are intended to ensure that new self-storage facility will not adversely impact the economic vitality of Capitola's commercial districts.

B. Required Findings. In addition to the findings in Chapter 17.124 (Use Permits), the Planning Commission must make the following findings to approve a self-storage facility in the Community Commercial (C-C) and Regional Commercial (C-R) zoning districts:

1. The location of the proposed self-storage facility is not conducive to traditional retail due to limited access to or poor visibility from the street.

2. The proposed self-storage facility would be compatible with existing land uses in the surrounding area.

3. Streets and other means of egress are adequate to serve the proposed self-storage facility.

17.96.160 Solar Energy Systems

A. Required Permits.

1. **Rooftop Systems.** Rooftop solar energy systems are permitted by-right in all zoning districts. No permit or approval other than a building permit is required.

2. **Other Systems.** Solar energy systems that are not located on the rooftop of a primary structure require a Conditional Use Permit.

B. Height Exceptions. Rooftop solar energy systems may project up to 4 feet above the maximum permitted structure height in the applicable zoning district.

Attachment: Draft Zoning Code Public Review 02.04.2016 (1392 : Zoning Code Update)

C. Building Permit Review and Approval. Building permit applications for rooftop solar energy systems shall be reviewed and approved in compliance with Municipal Code Chapter 15.10 (Expedited Solar Permitting Ordinance).

17.96.170 Soquel Creek Pathway, Bulkheads, and Decks

A. Soquel Creek Riverview Pedestrian Pathway. The following standards apply to the Soquel Creek Riverview Pedestrian Pathway, which extends from the Stockton Avenue Bridge along the eastern side of Soquel Creek, under the Railroad Trestle, to 427 Riverview Avenue, where it follows a drainage easement to Riverview Avenue. As used in this section, "pathway" means the undeveloped area within which the pedestrian walking surface (comprised of brick, decomposed granite and other surface materials) is located.

1. The pathway shall be maintained at a minimum of either the existing pathway width shown in the March 2005 survey maintained by the City of Capitola, or 4 feet, whichever is greater.
2. Primary structures east of the pathway shall be setback a minimum of 5 feet from the edge of the pathway.
3. New development, decks, fencing, landscaping and other improvements may not encroach into the pathway.
4. Property owners shall trim and maintain landscaping so that it does not encroach into the pathway to less than 4 feet.
5. Surface variations (i.e., brick, decomposed granite and other surfaces) are permitted.

B. Bulkheads and Decks. The following standards apply to bulkheads and decks adjacent to Soquel Creek.

1. All bulkheads shall be constructed in a rustic manner and finished in wood.
2. Deck handrails may not exceed 42 inches in height. The space between the deck and the handrails may not be filled in to create a solid appearance.
3. Only two freestanding lights up to 8 feet in height are allowed for each deck.

17.96.180 Temporary Sidewalk Dining

Note: Standards for temporary sidewalk dining in this section are new.

This section establishes requirements for temporary outdoor dining areas located on a public sidewalk or other area within the public right-of-way.

A. Required Permits. Temporary sidewalk dining within the public right-of-way requires an Administrative Permit and an Encroachment Permit.

B. Standards. Temporary sidewalk dining shall comply with the following standards.

1. **Location**. Outside dining is permitted on the public sidewalk:
   a. Only in a zoning district that allows restaurants;
   b. When incidental to and part of a restaurant; and
   c. Along the restaurant's frontage.
2. **Number of Dining Areas**. An indoor restaurant may operate only one outside dining area confined to a single location.
3. **Safe Passage**.
   a. Temporary sidewalk dining is permitted only where the sidewalk is wide enough to adequately accommodate both the usual pedestrian traffic in the area and the operation of the outside dining area.
   b. The sidewalk immediately adjacent to the restaurant shall have adequate space to accommodate tables and chairs and shall provide adequate safe passage along the sidewalk for pedestrian and wheelchair users of the sidewalk. Safe and adequate passage of 4 feet width shall be provided along the sidewalk and from the curb to the sidewalk. No tables or chairs shall be placed or allowed to remain on any sidewalk that inhibit passage.
4. **Furniture and Signage Location**.
   a. Tables and chairs in a sidewalk dining area shall be set back at least 2 feet from any curb and from any sidewalk or street barrier, including a bollard, and at least 8 feet from a bus stop.
   b. All outdoor dining furniture, including tables, chairs, umbrellas, and planters, shall be movable.
   c. All temporary improvements to separate the outdoor dining area from the sidewalk, such as a railing, shall relate to the architectural design of the primary restaurant structure in color, materials, and scale.
   d. Umbrellas shall be secured with a minimum base of not less than 60 pounds.
   e. Signage is prohibited within an outside dining area except for the name of the establishment on an awning or umbrella fringe and as required by this section when alcoholic beverages are served.
5. **Food and Beverages**. The service of alcoholic beverages within the sidewalk dining area requires a Conditional Use Permit, and shall comply with the following requirements:
   a. The outside dining area shall be situated immediately adjacent to and abutting the indoor restaurant which provides it with food and beverage service.
   b. The outside dining area shall be clearly separate and delineated from the areas of the sidewalk which remains open to pedestrian traffic.

Attachment: Draft Zoning Code Public Review 02.04.2016 (1392 : Zoning Code Update)

c. One or more signs shall be posted during hours of operation stating that alcohol is prohibited outside of the dining area.

d. The outside dining area shall receive all licenses required for on-site consumption of alcoholic beverages from State authorities.

6. **Trash and Maintenance**.

a. Storage of trash is prohibited within or adjacent to the sidewalk dining area. All trash and litter shall be removed as it accumulates or otherwise becomes a public nuisance.

b. The sidewalk dining area, including the sidewalk surface and furniture, shall be maintained in a clean and safe condition.

7. **Hours of Operation**. Sidewalk dining may occur between 7 a.m. and 10 p.m. Tables, chairs, and all other outdoor dining furniture shall be removed from the sidewalk and stored indoors at night and when the sidewalk dining area is not in operation.

8. **Conversion of On-Street Parking Spaces**.

a. On-street parking spaces in the MU-V zoning district may be converted to an outdoor dining area with Planning Commission approval of a Conditional Use Permit and City Council approval of an Encroachment Permit.

b. Outdoor dining areas replacing a parking space must be open to the general public. Access may not be limited to customers of businesses immediately adjacent to the outdoor dining area.

c. No more than two parking spaces in a single location may be converted to an outdoor dining area.

d. To approve the Conditional Use Permit and Encroachment Permit, the City must find that the conversion of the parking space to outdoor dining will enhance the vitality of Village and will not diminish public access to and enjoyment of coastal resources in Capitola.

17.96.190 Temporary Uses and Structures

Note: This section adds new detail to the types of temporary uses and structures allowed by-right and those allowed with an Administrative Permit.

A. Purpose. This section establishes requirements for the establishment and operation of temporary uses and structures. These requirements allow for temporary uses and structures in Capitola while limiting impacts on neighboring properties and the general public.

Attachment: Draft Zoning Code Public Review 02.04.2016 (1392 : Zoning Code Update)

B. Temporary Uses Allowed By Right. The following temporary uses are permitted by right. No permits or approvals from the Community Development Department are required.

1. **Garage Sales.** Garage sales for individual residences limited to three, one- to two-day events per calendar year. One block or neighborhood sale per calendar year is allowed in addition to individual sales.

2. **Storage Containers.** Storage containers delivered to a home, loaded by residents, and delivered to another location, for a maximum of two weeks on private property. Storage containers on a residential property for more than two weeks may be approved by the Planning Commission with a Conditional Use Permit.

3. **Outdoor Fund Raising Events.** Outdoor fund raising events on commercial sites when sponsored by a non-profit organization directly engaged in civic or charitable efforts. Outdoor fund raising events with property owner permission are limited to two days each month for each sponsoring organization.

4. **On-Site Construction Yards.** Temporary construction yards and office trailers that are located on-site, less than 1 acre in size, and established in conjunction with an approved project. The construction yard and trailer shall be immediately removed within 10 days of completion of the construction project or expiration of the building permit.

C. Temporary Uses Requiring a Permit. An Administrative Permit is required for the following temporary uses.

1. **Seasonal Sales**. Seasonal sales (e.g., Christmas trees, pumpkins) for a maximum of 45 calendar days, no more than four times per year on a single property. Seasonal sales are prohibited on residentially zoned property.

2. **Temporary Outdoor Displays of Merchandise and Parking Lot Sales.** Temporary outdoor displays of merchandise and parking lot sales on private property for a maximum of three days no more than two times per year on a single property. Following the completion of the temporary display, all signs, stands, poles, electrical wiring, or any other fixtures, appurtenances or equipment associated with the display shall be removed from the premises.

3. **Farmer's Markets**. Farmer's markets for a maximum of one day per week in a non-residential zoning district. Farmer's markets for more than one day per week in a non-residential are permitted with a Conditional Use Permit. Farmer's markets in a residential zoning district are permitted with a Conditional Use Permit.

4. **Off-Site Construction Yards**. Construction yards located off-site in conjunction with an approved project. The construction yard shall be immediately removed within 10 days of completion of the construction project or expiration of the building permit.

Attachment: Draft Zoning Code Public Review 02.04.2016 (1392 : Zoning Code Update)

5. **Employee Trailers.** Trailer or commercial modular units used as a work site for employees of a business displaced during construction, for a maximum of 12 months.

6. **Real Estate Offices.** Real estate offices used exclusively for the sale of homes or other real estate units located within an approved multi-unit development project for a maximum of three years or within 30 days when the last home is sold, whichever comes first.

7. **Other Similar Activities**. Similar temporary activities determined by the Community Development Director to be compatible with the applicable zoning district and surrounding uses.

D. Temporary, Publicly Attended Activities. Temporary, publicly attended activities such as festivals, outdoor entertainment, and other similar events may be permitted pursuant to Municipal Code Chapter 9.36 (Temporary, Publicly Attended Activities).

E. Conditions of Approval. Upon the approval of a permit for a temporary use, the City may attach the following conditions when necessary in connection with the temporary use:

1. Hours of operation.
2. Maintenance of accessibility for the disabled.
3. Protection of fire lanes and access.
4. Preservation of adequate on-site circulation.
5. Preservation of adequate on-site parking or a parking management plan to temporarily park off-site.
6. Cleanup of the location or premises.
7. Use of lights or lighting or other means of illumination.
8. Operation of any loudspeaker or sound amplification in order to prevent the creation of any nuisance or annoyance to the occupants of or commercial visitors to adjacent buildings or premises.

17.96.200 Unattended Donation Boxes

Note: Standards for unattended donation boxes in this section are new.

A. Purpose and Applicability. This section establishes standards for unattended donation boxes to allow for the convenient donation of personal property in a manner that maintains a safe and attractive environment. An unattended donation boxes is any unattended container, receptacle, or similar device used for soliciting and collecting donations of clothing or other salvageable personal property. Recycle bins for the collection of recyclable materials are not included in this definition of an unattended donation boxes.

Attachment: Draft Zoning Code Public Review 02.04.2016 (1392 : Zoning Code Update)

B. Required Permits. An Administrative Permit is required to establish, operate, or maintain an unattended donation box. The Community Development Department may forward applications to the Chief of Police for review and comment prior to issuance of permit.

C. Location. Unattended donation boxes are permitted only in the Regional Commercial (C-R) and Community Commercial (C-C) zoning districts.

D. Standards. All unattended donation boxes shall comply with the following standards.

1. **Condition**. Unattended donation boxes shall be maintained in good condition and appearance with no structural damage, holes, or visible rust.
2. **Securing of Boxes**. Unattended donation boxes shall be locked or otherwise secured.
3. **Emptying of Boxes**. Unattended donation boxes shall be serviced and emptied as needed, but at least once per month, or within five business days of a request by the Community Development Director.
4. **Number per Property**. A maximum of one unattended donation box is permitted per property.
5. **Minimum Lot Size**. Unattended donation boxes are permitted only on lots of 20,000 square feet or more.
6. **Separation**. Unattended donation boxes may not be placed within 400 feet of another unattended donation box.
7. **Placement**. Unattended donation box may not be placed on required on-site parking spaces or within the vision triangle as defined in Section 17.96.040 (Intersection Site Distance).

E. Permit Revocation. The Administrative Permit for an unattended donation box that violates the standards in this section or constitutes a public nuisance may be revoked pursuant to Section 17.156.110 (Permit Revocation).

Attachment: Draft Zoning Code Public Review 02.04.2016 (1392 : Zoning Code Update)

Attachment: Draft Zoning Code Public Review 02.04.2016 (1392 : Zoning Code Update)

Chapter 17.100 – MOBILE HOME PARK CONVERSIONS

Sections:

17.100.010 Purpose and Intent
17.100.020 Applicability
17.100.030 Definitions
17.100.040 Relocation Impact Report
17.100.050 Notice to Prospective Occupants of Pending Change in Park Status
17.100.060 Exemptions from Relocation Assistance Obligations
17.100.070 Application for Change of Use – Public Hearing – Findings
17.100.080 Measures to Prevent Avoidance of Relocation Assistance Obligations
17.100.090 Compliance with Relocation Assistance
17.100.100 Modification and Revocation of Approved Closure or Conversion
17.100.110 Expiration and Extension of Approval
17.100.120 Preemption
17.100.130 Severability

17.100.010 Purpose and Intent

This chapter establishes standards for the closure of a mobile home park and addresses the impact of such closures upon the ability of displaced residents to find adequate housing in another mobile home park. Mobile home parks are an important source of affordable housing within Capitola. The purpose of this chapter is to provide financial compensation and relocation assistance to displaced residents and provide mobile home park owners with protection from unreasonable relocation costs, in compliance with Government Code Sections 65863.7 and 66427.4. Nothing in this chapter shall be construed to mean that the City supports any change of use of any mobile home park.

17.100.020 Applicability

This chapter applies to the closure of any mobile home park or the conversion of a mobile home park to a different use.

17.100.030 Definitions

As used in this chapter, the following words and phrases shall have the following meanings:

A. "Applicant" means a person or entity who has filed an application for change of use of a mobile home park.

B. "Change of use" includes all activities specified in Section 798.10 of the California Civil Code and amendments to the General Plan or any applicable specific plan, rezoning of property, land use permits, such as a Conditional Use Permit or a Variance, Tentative

Attachment: Draft Zoning Code Public Review 02.04.2016 (1392 : Zoning Code Update)

Parcel or Tentative Tract Maps, and building permits when the effect of the change will be to decrease the number of spaces available for mobile home habitation.

C. "Change without new use" refers to what Civil Code Section 798.56(g)(2) describes as a "change of use [requiring] no local governmental permit" [other than approval of the RIR].

D. "Comparable housing" means housing which, on balance, is comparable in floor area, number of bedrooms, and amenities, proximity to public transportation, shopping, schools, employment opportunities and medical services and other relevant factors to the mobile home to which comparison is being made.

E. "Comparable mobile home park" means a mobile home park substantially equal in terms of park condition, amenities and other relevant factors, including, but not limited to, proximity to public transportation, shopping, medical services, employment opportunities and schools.

F. "Director" means the Community Development Director.

G. "Eligible mobile home resident" or "eligible resident" means a mobile home resident whose mobile home was located in a mobile home park on the date of an application for change of use. Eligible resident includes the spouse, parents, children and grandchildren of the eligible resident when those persons resided in the mobile home on the date of the application.

H. "Legal owner" means any person or entity having an ownership interest in a mobile home other than the registered owner, such as a lender or mortgagor.

I. "Mobile home" has the meaning set forth in Section 798.3 of the California Civil Code.

J. "Mobile home owner" means the registered owner or registered owners of a mobile home, regardless of the number of such owners or the form of such ownership.

K. "Mobile home park" or "park" has the meaning set forth in Section 798.4 of the California Civil Code.

L. "Mobile home park owner" or "park owner" means the person, persons or entity that owns a mobile home park and includes any person authorized by the park owner to seek approval of an application for change of use or respond to a rent review petition filed pursuant to this chapter.

M. "Mobile home owner" means a mobile home owner who resides in the mobile home he or she owns. Unless the context indicates otherwise, it includes the mobile home owner's spouse, parents, children and grandchildren who reside in the mobile home.

N. "Mobile home tenant" or "tenant" is a person who occupies a mobile home within a mobile home park pursuant to a bona fide lease or rental agreement and who, during his or her tenancy, was not the owner of that mobile home.

O. "Handicapped mobile home resident" means a mobile home resident with any medically determinable physical or mental impairment as demonstrated by a finding of a

Attachment: Draft Zoning Code Public Review 02.04.2016 (1392 : Zoning Code Update)

state or federal agency or a medical certificate, or who requires special care facilities in the mobile home or special care equipment, such as, but not limited to, a wheelchair.

P. "Low income" means an income of eighty percent or less of current median income as established annually by the United States Department of Housing and Urban Development ("HUD") for the statistical area in which Capitola is located, as adjusted for household size.

17.100.040 Relocation Impact Report

A. Submittal to Director. Prior to a change of use of a mobile home park, a Relocation Impact Report (RIR) complying with the requirements of this chapter must be filed with the Director. It is the park owner's responsibility to comply with the notice requirements of subsections g(l) and (2) of Civil Code Section 798.56. Because the Civil Code Section 798.56(g)(2) notice cannot be given until after the approval of both the project and the sufficiency of the (RIR), the park owner is encouraged to consult with staff (especially if any waiver of Municipal Code Section 17.90.030 requirements will be requested) early in the process about the contents of the RIR.

B. Required Information. The RIR shall be prepared by an independent agent acceptable to the City at the applicant's expense and shall include the following information unless the Director determines the information is not necessary:

1. A detailed description of the proposed or change of use, or change without new use.
2. A timetable for conversion of the mobile home park.
3. A legal description of the mobile home park.
4. The number of spaces in the park, length of occupancy by the current occupant of each space and current rental rate for each space.
5. The date of manufacture and size of each mobile home.
6. Appraisals addressing relevant issues identified by the Director. A qualified appraiser shall be selected by the City and the cost of the appraisals shall be borne by the applicant. The appraisals shall identify those mobile homes which cannot be moved due to type, age or other considerations. Appraisal information shall be provided on the effect upon the homeowner's investment in the mobile home, such as the change in value of effected mobile homes that would result from the proposed change of use.
7. The results of questionnaires to all homeowners/occupants regarding the following: whether the occupant owns or rents, whether this is the only residence, occupants' ages, whether the occupants have disabilities that would be aggravated by the moving process, the purchase date and price paid by the mobile home owner, the costs incurred by the mobile home owner in improving the home, and

Attachment: Draft Zoning Code Public Review 02.04.2016 (1392 : Zoning Code Update)

the amount and relevant terms of any remaining mortgage. Answering such questionnaire shall be voluntary.

8. The name and mailing address of each eligible resident, mobile home tenant, mobile home resident, resident mobile home owner and legal owner of a mobile home in the park.

9. The purchase price of condominiums similar in size to the mobile homes within a reasonable distance, and the rental rates and moving costs involved in moving to an apartment or other rental unit within a reasonable distance including, but not limited to, fees charged by moving companies and any requirement for payment of the first and last month's rent and security deposits.

10. A list of comparable mobile home parks within a 20 mile radius and a list of comparable mobile home parks within a radius of 25 to 50 miles of the applicant's mobile home park. For each comparable park, the list should, if possible, state the criteria of that park for accepting relocated mobile homes, rental rates and the name, address and telephone number of the park representative having authority to accept relocated homes, including any written commitments from mobile home park owners willing to accept displaced mobile homes. The purpose of this requirement is to provide information necessary to create appropriate relocation compensation. It is not meant to suggest that the City, in any sense, favors tenants relocating out of any mobile home park in Capitola.

11. Estimates from two moving companies as to the minimum and per mile cost of moving each mobile home, including tear-down and set-up of mobile homes and moving of improvements such as porches, carports, patios and other moveable amenities installed by the residents. Said moving companies shall be approved by the director prior to inclusion in the final RIR.

12. Proposed measures to mitigate the adverse impacts of the conversion upon the mobile home park residents.

13. Identification of a relocation specialist to assist residents in finding relocation spaces and alternate housing. The specialist shall be selected by the applicant, subject to the City's approval, and shall be paid for by the applicant.

C. Filing of Relocation Impact Report. The City shall not consider an RIR to be filed, within the meaning of Government Code Section 65863.7, until the applicant has submitted to the Community Development Department both a draft RIR which applicant believes meets the requirements of Municipal Code Section 17.90.030, and a written statement that such draft RIR has been filed pursuant to Government Code Section 65863.7.

D. Refusal to Review Relocation Impact Report. If the City Attorney determines that the proposed conversion or closure of the mobile home park would be illegal, the Community Development Director shall not process the RIR unless a court of competent jurisdiction rules that the proposed use would be legal.

Attachment: Draft Zoning Code Public Review 02.04.2016 (1392 : Zoning Code Update)

17.100.050 Notice to Prospective Occupants of Pending Change in Park Status

After an application for change of use of a mobile home park (or for City approval of a RIR) has been filed with the Director, the applicant shall give notice to all known prospective mobile home purchasers and tenants that the application for change of use has been filed. Notice shall be given in addition to notices required by Civil Code Section 798.56 (g) (1) and in all cases shall be given prior to execution of any new rental agreement. The park owner shall obtain a signed acknowledgment of receipt of such notice from each prospective purchaser or tenant and file it with the Director. If the prospective purchaser or tenant refuses to sign, a dependable record of delivery of notice shall be maintained by the park owner.

17.100.060 Exemptions from Relocation Assistance Obligations

A. Exemption Available. Any person who files an application for change of use may file an application for total or partial exemption from the obligation to provide relocation assistance.

B. Notice of Application. Notice of an application for exemption shall be given pursuant to Section 17.90.070.B and C. Notices shall contain the information in provided in the exemption application.

C. Basis for Application.

1. **Total Exemption**. An application for total exemption may be made on one of two grounds:

   a. The imposition of any relocation obligations would eliminate substantially all reasonable use or economic value of the property for alternate uses; or

   b. The park is exempt from the requirement of relocation assistance under state law governing changes of use of mobile home parks.

2. **Partial Exemption**. An application for partial may be made on one of two grounds:

   a. The imposition of particular relocation obligations would eliminate substantially all reasonable use or economic value of the property for alternate uses; or

   b. The obligation would exceed limitations imposed by Government Code Section 65863.7(e). The application shall specify the particular relocation obligations which would cause this result.

D. Application Contents.

1. An application for exemption made pursuant to subsections (1)(a) and (2)(a) above shall contain, at a minimum, an estimate of the value of the subject property by a qualified real estate appraiser if the park were permitted to be developed for the use proposed in the application for change of use, or other use consistent with

Attachment: Draft Zoning Code Public Review 02.04.2016 (1392 : Zoning Code Update)

applicable zoning, and an estimate of the value of such park by such appraiser if use of the property as a mobile home park is continued.

2. An application for exemption pursuant to subsection (1)(b) and (2)(b) above shall specify the provisions of state law providing the claimed exemption and documentation demonstrating entitlement to such exemption.

E. Notice of Approval. If the City grants an exemption after the applicant provides notice consistent with Civil Code Section 798.56(g)(2) notice, renoticing will be required.

17.100.070 Application for Change of Use – Public Hearing – Findings

A. City Review of RIR. Upon the filing of an RIR, the Director shall examine the RIR and advise the applicant in writing within 30 days whether it is complete. When an application and RIR have been accepted as complete, the Director shall set a time, date and place for a hearing before the Planning Commission not later than 60 days after the date of acceptance. Because certain required information in an RIR (e.g., appraisals, tenant data) cannot be obtained until after filing an application for change of use, the initial application for change of use and RIR shall contain all pertinent available information to start the process of obtaining the information required for a complete application and RIR.

B. Owner and Resident Notice. Not less than 30 days prior to the scheduled public hearing before the Planning Commission, the park owner shall deliver to the each mobile home owner and resident within the park a copy of the approved RIR and the notice of the date, time and place of the public hearing on the application. Notice shall be delivered by certified mail or personal delivery.

C. Verification of Notice Requirements. Not less than 15 days prior to the scheduled public hearing before the Planning Commission on the RIR, the park owner shall file with the Director a verification of noticing required by this chapter and Government Code Section 65863.7. The form and manner of such verification shall be approved by the City Attorney.

D. Planning Commission Recommendation.

1. **Public Hearing**. The Planning Commission shall hold a public hearing on the application for a change of use and the RIR within 95 days of the date the application and RIR were accepted as complete. The Planning Commission shall provide a recommendation to the City Council on the approval of the change of use and RIR and may recommend measures to mitigate adverse impacts on residents impacted by the change of use.

2. **Mitigation Measures**. Measures to mitigate adverse impacts on residents shall not exceed reasonable cost and may include, but are not limited to, the following:

Attachment: Draft Zoning Code Public Review 02.04.2016 (1392 : Zoning Code Update)

a. Payment of the cost of physically moving the mobile home to a new site, including tear-down and setup of mobile homes, including, but not limited to, movable improvements such as patios, carports and porches.

b. Payment of a lump sum based on consideration of any increase in security deposit at the new mobile home park which the resident or tenant lacks the ability to pay.

c. Payment of a lump sum based on consideration of any differential between rental rates at the closing mobile home park and the new mobile home park during the first year of the new tenancy.

d. For those mobile home residents who move to apartments or other rental housing alternatives, payment of a lump sum based on consideration of any differential in the rental rate between the closing park and the comparable housing, requirements for payment of security deposits and cleaning fees. Mobile home households may be compensated based on the number of bedrooms in the mobile home so that a one bedroom mobile home may be compensated based on a one bedroom apartment, a two bedroom mobile home based on a two bedroom apartment, etc.

e. Provision of a replacement space within a reasonable distance of the closing mobile home park.

f. For residents whose mobile home cannot be relocated to a comparable park within a 50-mile radius of the closing mobile home park, payment of a lump sum based upon consideration of the value of the mobile home, including resident improvements (e.g., landscaping, porches, carports), any increase in mortgage obligations of the resident on the mobile home, and the costs of purchasing a mobile home on-site in a comparable park or acquiring other comparable replacement housing.

g. The park owner shall make the monetary payments contemplated in this subsection a reasonable period of time (to be set by the City Council) in advance of the actual relocation of a resident or homeowner. The resident or homeowner shall not be under a legal obligation to relocate by the method used to measure mitigation costs.

E. City Council Decision.

1. **Hearing and Decision**. The City Council shall hold a noticed public hearing on an application for a change of use within 45 days of the Planning Commission's recommendation. The City Council shall take action on the application within 80 days of the Planning Commission's recommendation.

2. **Mitigation Measures**. The City Council may impose reasonable measures not exceeding the reasonable costs of relocation to mitigate the adverse impacts of the change of use on eligible mobile home residents pursuant to Paragraphs D and G of this section.

Attachment: Draft Zoning Code Public Review 02.04.2016 (1392 : Zoning Code Update)

3. **Statue of Limitations**. The decision of the City Council is final. Pursuant to Code of Civil Procedure 1094.6, the statute of limitations for bringing a judicial challenge to any decision concerning a change of use of mobile home park is 90 days. Notice of the City's decision to the applicant, park owner and affected residents shall include notice that the 90 day statute of limitations in 1094.6 applies.

F. Extension of Time Periods. Time periods in this section may be extended as necessary to comply with the California Environmental Quality Act (CEQA) or the California Coastal Act.

G. Cost of Mitigation Measures. Notwithstanding any other provision in this section, the cost of mitigation measures shall comply with Government Code Section 65863.7 which states that "the steps taken to mitigate shall not exceed the reasonable costs of relocation."

17.100.080 Measures to Prevent Avoidance of Relocation Assistance Obligations

A. Notice. If any change of use or RIR approval application is withdrawn or denied, those previously given notices or announcements shall be so informed in writing by the mobile home park owner.

B. No Waiver of Rights. No prospective mobile home resident or existing mobile home resident may be required to sign a waiver, or a lease or rental agreement which includes a waiver, of their rights under this chapter. Any waiver of rights under this chapter by such a mobile home resident shall be deemed invalid unless the resident or prospective resident and the park owner obtain the prior approval of the waiver from the Director, who may grant such approval only upon a finding that the waiver is voluntary and was made after being fully informed of the terms of this chapter.

17.100.090 Compliance with Relocation Assistance

A. Acceptance of Mitigation Measures.

1. The applicant shall execute and record a certificate, and file proof with the Director, accepting the mitigation measures imposed on the approval of a closure or conversion within 90 days of the final City Council action approving the change of use. The applicant shall give the six- or twelve-month notice of the termination of tenancy and closure of the park required by Civil Code Section 798.56(g) within 120 days of that action.

2. An approval of a change of use shall automatically become null and void if the certificate accepting the conditions is not filed and executed within 90 days of the date of the approval of the change of use and the notice of termination of tenancy has not been given within 120 days of that resolution.

B. Timing of Mitigation. All mitigation measures imposed on the approval of a change of use shall be fully performed for each resident prior to that resident's required vacation of the mobile home park, unless otherwise provided in the mitigation measure.

Attachment: Draft Zoning Code Public Review 02.04.2016 (1392 : Zoning Code Update)

No eligible resident shall be required to vacate a mobile home space unless the applicant is in full compliance with all mitigation measures pertaining to the resident, and has otherwise fulfilled the notice requirements of the California Mobile Home Residency Law relating to termination of tenancy.

C. Issuance of Building Permits. The City may not issue any building permit for the development within a converted or closed mobile home park until the City has adopted a resolution approving the change of use and the mobile home park owner has fully complied with the relocation assistance required by that resolution.

17.100.100 Modification and Revocation of Approved Closure or Conversion

A. Modification.

1. After a change of use has been approved and after the applicant has executed and recorded a certificate of acceptance of the conditions of any approval, the City my consider modification of the mitigation measures imposed upon the filing of a written application by the applicant. The City may approve modifications on the grounds that there has been a change in circumstances or that new information which could not reasonably have been known or considered at the time of the hearings on the application has become available. Examples of such new information or changed circumstances include, but are not limited to, revised plans by the applicant and a change in the availability of relocation spaces. Modifications may not be approved when it would unreasonably prejudice the ability of the residents to relocate to comparable spaces or comparable alternate housing.

2. Any application for modification shall be subject to the notice and hearing procedures set forth in Sections 17.100.070 (Application for Change of Use – Public Hearing – Findings). The decision in connection with a modification request shall take place as with the initial approval.

B. Revocation.

1. The City Council may initiate revocation proceedings on the grounds that the mobile home park owner or applicant has violated this chapter or the terms of the approval of the change of use. Action to initiate revocation proceedings shall specify the grounds for revocation and shall set a hearing before the City Council to consider the revocation not sooner than 45 and not later than 60 days after the action to initiate proceedings.

2. Notice of revocation proceeding shall be sent to the mobile home park owner by certified mail or personal delivery together with notice that any response from the owner must be filed at least 20 days prior to the date set for the revocation hearing.

3. The City Council shall render its findings and decision concerning revocation within 90 days after initiating revocation proceedings.

17.100.110 Expiration and Extension of Approval

A. Expiration. Approval of a change of use shall become null and void if the notice of termination of tenancy has not been given within the time provided in Section 17.90.090 (Compliance with Relocation Assistance) and relocation pursuant to the conditions of approval has not occurred within twelve months of the effective date of the approval of the change of use, unless otherwise extended as provided in Paragraph B below, or unless otherwise provided in the resolution approving it.

B. Extensions.

1. The City Council may approve an extension to the date of giving notice and/or to the approval of the change of use. Applications for an extension shall be submitted in writing by the mobile home park owner to the Community Development Department. Applications must be submitted on or before the date to give the notice of termination or the expiration of the approval of the change of use.

2. The City Council may deny the request upon finding that the mobile home park owner has unreasonably delayed implementation of the mitigation measures or that further delay will result in prejudice or further adverse impacts upon eligible residents remaining in the mobile home park. Approval of an extension may be conditioned on reasonable measures designed to mitigate the adverse impacts resulting from the delay. The application for extension shall be subject to the notice and hearing procedures set forth in Section 17.100.100(B).

17.100.120 Preemption

In the event the provisions of this chapter conflict with any code, ordinance or regulation of the City, the provisions of this chapter shall govern. In the event any provisions of this chapter conflict with a provision of state law, this chapter shall be interpreted and applied in conformity with state law.

17.100.130 Severability

If any part or provision of this chapter, or the application of such to any person or circumstance is held invalid, the remainder of the chapter, including the application of such part or provision to other persons or circumstances, shall not be effected and shall continue in full force and effect. To this end the provisions of this chapter are severable.

Attachment: Draft Zoning Code Public Review 02.04.2016 (1392 : Zoning Code Update)

Chapter 17.104 – WIRELESS COMMUNICATIONS FACILITIES

Sections:

17.104.010 Purpose
17.104.020 Definitions
17.104.030 Applicability
17.104.040 Permits and Approvals
17.104.050 Location Standards
17.104.060 Development Standards
17.104.070 Small Cells and Distributed Antenna Systems
17.104.080 Antenna Siting and Mounting Techniques
17.104.090 Modifications to Existing Facilities
17.104.100 Operational Standards
17.104.110 Miscellaneous Requirements
17.104.120 Severability

17.104.010 Purpose

This chapter establishes standards for the development and installation of wireless communications facilities. These standards aim to protect public safety and community welfare, property values, and the character and aesthetic quality of Capitola, while at the same time not unduly restricting the development of wireless communications facilities, and not unreasonably discriminating among wireless communications providers of functionally equivalent services. These standards are further intended to:

A. Require the location of new monopoles, towers and antennas in non-residential zoning districts unless technically necessary for provision of the service.

B. Require wireless telecommunication facilities to be designed in a way to minimize adverse visual impacts.

C. Encourage co-location of facilities.

D. Protect the public's interest in the safe operation of public safety, emergency and medical services.

E. Protect the public from exposure to electromagnetic frequency or radio frequency radiation in excess of federal standards.

17.104.020 Definitions

As used in this chapter, the following terms shall have the meaning set forth below, unless the context clearly dictates a different meaning:

A. "Amateur radio facilities" are antennas and related equipment for the purpose of self-training, intercommunication, or technical investigations carried out by an amateur radio operator who

Attachment: Draft Zoning Code Public Review 02.04.2016 (1392 : Zoning Code Update)

operates without commercial interest, and who holds a written authorization from the Federal Communications Commission to operate an amateur radio facility.

B. "Antenna" is a device or system of wires, poles, rods, dishes, discs or similar devices used for the transmission and/or receipt of electromagnetic waves.

C. "Base transceiver station" (BTS) is the electronic equipment housed in cabinets that, together with antennas, comprises a telecommunication facility or "site." The cabinets include an air conditioning unit, heating unit, electrical supply, telephone hook-up and back-up power supply.

D. "Building-concealed antenna" is a an antenna designed and constructed as an existing architectural feature of an existing building in a manner such that the antenna is not discernible from the remainder of the building and is completely enclosed within the architectural feature.

E. "Co-location" is a wireless telecommunications facility comprising a single telecommunications tower, monopole or building supporting antennas owned or used by more than one wireless telecommunications carrier.

F. "Distributed Antenna System (DAS)" is a network of spatially separated antenna nodes connected to a common source via a transport medium that provides wireless service within a geographic area or structure.

G. "Facade-mounted antenna" is an antenna that is directly attached or affixed to a building facade.

H. "Freestanding monopole" is a structure composed of a single spire used to support communications equipment.

I. "Ground-mounted antenna" is an antenna with its support structure placed directly on the ground.

J. "Monopole." See "Freestanding monopole."

K. "Radio frequency radiation" (RFR) means electromagnetic radiation in the portion of the spectrum from three kiloHertz to three hundred gigaHertz.

L. "Roof-mounted antenna" means an antenna directly attached or affixed to the roof of an existing building, water tank, tower or structure other than a telecommunications tower. This type of installation is sometimes called a freestanding roof-mounted antenna.

M. "Service provider" means a wireless telecommunications provider, company or organization, or the agent of a company or organization that provides wireless telecommunications services.

N. "Significant gaps" is a gap in the service provider's own wireless communications facilities, as defined in federal case law interpretations of the Federal Telecommunications Act of 1996, including Sprint Spectrum v. Willoth (1999) 176 F.3d 630 and Cellular Telephone Company v. Zoning Board of Adjustment of the Borough of Ho-Ho Kus (1999) 197 F.3d 64.

O. "Small cell facility" is a personal wireless service facility as defined by the Federal Telecommunications Act of 1996 or a wireless service facility that satisfies the following requirements:

1. Each antenna, including exposed elements, has a volume of 3 cubic feet or less.

Attachment: Draft Zoning Code Public Review 02.04.2016 (1392 : Zoning Code Update)

2. All antennas, including exposed elements, have a total volume of 6 cubic feet or less; and

3. The primary equipment enclosure located with the facility has a volume of 17 cubic feet or less.

P. "Stealth facility" is any communications facility designed to blend into the surrounding environment, and is visually unobtrusive. Examples of stealth facilities may include architecturally screened roof-mounted antennas, facade mounted antennas painted and treated as architectural elements to blend with the existing building, or elements designed to appear as vegetation or trees. Also known as concealed telecommunications facilities.

Q. "Telecommunications" is any transmission, emission or reception of signals, images, sound, or information of any nature by wire, radio, visual or electromagnetic system that work on a "line-of-sight" principle.

R. "Telecommunication tower" is a monopole, lattice tower, freestanding tower or other structures designed to support antennas.

S. "Visual impact" means the placement or design of an antenna, or the associated equipment and/or buildings, such that they are not screened or shielded or are plainly visible and are likely to be noticeable or otherwise conspicuous.

T. "Wireless telecommunications facility" is a facility supporting antennas that sends and/or receives radio frequency signals. Wireless telecommunications facilities include antennas and all other types of equipment for the transmission or receipt of such signals; telecommunication towers or similar structures built to support such equipment; equipment cabinets, base transceiver stations, and other accessory development.

U. "Wireless telecommunications provider" is any company or organization that provides or who represents a company or organization that provides wireless telecommunications services.

17.104.030 Applicability

A. This chapter applies to all private property in Capitola and to all property in Capitola owned by the City or other public agency.

B. This chapter does not apply to the following facilities:

1. Non-commercial antennas such as citizen band radios and amateur radio facilities that are an accessory structure to a dwelling.

2. Wireless communications facilities which are not licensed by the Federal Communications Commission (FCC) and are determined by the Community Development Director to have little or no adverse visual impact.

3. Direct-to-home satellite and digital TV dishes.

4. Non-commercial wireless communications facilities owned and operated by a public agency.

Attachment: Draft Zoning Code Public Review 02.04.2016 (1392 : Zoning Code Update)

5. Temporary wireless communication facilities that are needed during public emergencies or are used in conjunction with a temporary event or activity that does not otherwise require a permit under this chapter

17.104.040 Permits and Approvals

Note: Ability to approve preferred types of wireless facilities in preferred locations with a Minor Use Permit and a Minor Design Permit is new.

A. Required Permits.

1. **Minor Use Permit and Minor Design Permit.** A proposed building-concealed, facade-mounted, or roof-mounted wireless communication facility located in a preferred location that complies with all applicable standards in this chapter requires Community Development Director approval of a Minor Use Permit and an Minor Design Permit.

2. **Conditional Use Permit and Design Review**. Planning Commission approval of a Conditional Use Permit and Design Permit is required for the following wireless communication facilities:

   a. Facilities located in a non-preferred locations as defined in Section 17.104.050.C (Non-Preferred Locations); and

   b. Facilities that do not comply with development standards in Section 17.105.060 (Development Standards) and Section 17.105.080 (Antenna Siting and Mounting Techniques).

3. **Public Notice and Hearing**. Public notice and hearings for required permits shall be given consistent with Chapter 17.148 (Public Notice and Hearing).

B. Application Submittals Requirements. An application for a proposed wireless communication facility shall be filed and reviewed in compliance with Chapter 17.112 (Permit Application and Review). The application shall include the information required by the Community Development Department with all required application fees. The project applicant may be required to submit some or all of the following information, depending on the scope of the proposed project and as determined by the Community Development Department.

1. **Project Description.** A written project description for the proposed wireless communication facility that includes a general description of the existing land use setting, the type of facility, visibility from public viewpoints, stealth design features, propagation diagrams, on and off-site access, landscaping, and facility components (support structure, antennas, equipment shelters or cabinets, emergency back-up generators with fuel storage, etc.).

2. **Site Plan and Design Specifications**. Documentation that fully describes the proposed project, including all on- and off-site improvements. The site plan shall be drawn to scale, and the site plan and design specifications shall include the following:

Attachment: Draft Zoning Code Public Review 02.04.2016 (1392 : Zoning Code Update)

a. Written explanation and site plan that describes the facility's components and design (including dimensions, colors, and materials), equipment cabinets, and the number, direction, and type (panel, whip, or dish) of antennas.

b. The location and dimensions of the entire site area, including property lines, existing structures and improvements, exact location of the wireless facility and its associated equipment with proposed setbacks, access improvements, and any proposed landscaping or other development features. The site plan shall also identify site grading, paving and other features that may increase runoff from the site.

c. Front, side, and rear elevation plans showing all of the proposed equipment and structures.

d. Floor plans, roof plans and elevations for building-concealed, facade- and roof-mounted wireless communication facilities showing all equipment and structures.

e. Color and materials board with manufacturer specifications and samples of the proposed color and material for the facility and its associated equipment.

f. Site plan components required to address fire prevention, water conservation, and other regulatory requirements.

3. **Landscape Plan**. A description of the location and type of newly proposed landscaping, proposed irrigation systems (as needed), and the location of existing landscape materials that are necessary to properly screen or blend the wireless communication facility with the surrounding area. This information may be provided on the site plan or in a separate conceptual landscape plan.

4. **Visual Impact Analysis**. A visual impact analysis includes photo simulations and other visual information, as necessary, to determine visual impact of the proposed wireless communication facility on the existing setting or to determine compliance with design standards established by this Section. The photo simulations shall include "before" and "after" renderings of the site, its surroundings, the proposed facility and antennas at maximum height, and any structures, vegetation, or topography that will screen the proposed facility from multiple public viewpoints. Public viewpoints selected for visual impact analysis should be located along the property line from the proposed facility. Any wireless facility that extends 10 feet beyond the maximum zone height are required to submit additional viewpoint analysis from vantage points identified by the Community Development Director. All photo simulations and other graphic illustrations shall include accurate scale and coloration of the proposed facility.

5. **Coverage Maps.** A narrative description and maps showing the coverage area of the provider's existing facilities that serve customers in Capitola and the coverage area that would result from the proposed new facility.

6. **Existing and Future Facilities Map**. A map, to scale, of the wireless communications provider's existing and planned facilities and service areas, including information about the location, height, design, coverage, and significant gaps within the city limits and within one-half mile therefrom.

Attachment: Draft Zoning Code Public Review 02.04.2016 (1392 : Zoning Code Update)

7. **Screening Techniques**. A description of the proposed means of visually screening public views of facilities, as needed, including submittals of sample exterior materials and colors of towers, antennas, accessory structures (such as equipment cabinets and structures), and security fences. This statement should include a justification of how the proposed height and visibility of the facility has been reduced to the maximum extent possible.

8. **Equipment Inventory**. The number, type and dimensions of antennas, equipment cabinets, and related facilities proposed for use by the wireless communications provider. The size of equipment cabinets and related facilities are not required if the cabinets and related facilities are located completely underground or entirely within a building, not including an equipment cabinet.

9. **Site Selection Process**. A statement indicating whether, and why, each site identified is essential for completion of the wireless communications provider's coverage objective. This should describe the site selection process including information about other sites which were considered that could service the same or similar coverage area and the reasons for their rejection.

10. **Alternative Sites Analysis.** For proposed facilities that do not comply with standards for visibility, height, location and other development standards, a statement in narrative form with supporting maps and other graphics which identify the other site locations considered, if any, and rejected in favor of the proposed site. The applicant shall provide supporting reasons why the alternate sites, if any, were rejected and why the proposed site is superior from a technical or other standpoint to the others considered. For proposed freestanding monopole facilities, the applicant shall state whether multiple small facilities in alternative locations were considered, and reasons why these locations where rejected. The applicant shall also identify alternative antennas and equipment cabinets consider for the proposed and alternative sites.

11. **Propagation Diagram**. One or more propagation diagrams or other evidence to demonstrate that the proposed wireless communication facility is the minimum height necessary to provide adequate service (i.e., radio frequency coverage or call-handling capacity) in an area served by the carrier proposing the facility. The propagation diagram shall include a map showing the provider's existing facilities, existing coverage or capacity area, and the proposed coverage or capacity area at varied antenna heights. The propagation diagram shall also include a narrative description summarizing the findings in layman's terms. Existing obstacles such as buildings, topography, or vegetation that cannot adequately be represented in the propagation diagrams, yet may cause significant signal loss and therefore require additional facility height, should be clearly described and/or illustrated through additional visual analyses, such as line-of-sight or Fresnel zone modeling diagrams.

12. **Co-location**. A statement of whether the facility could be co-located elsewhere and, if so, why co-location is not being proposed. This statement should also state the wireless communications provider's commitment to allow other wireless communications providers to co-locate antennas on their proposed facilities wherever structurally and technically feasible, to demonstrate how the facilities have been designed to allow co-location of other

Attachment: Draft Zoning Code Public Review 02.04.2016 (1392 : Zoning Code Update)

carriers (if applicable), and to provide at any time additional information, as requested by the Community Development Director, to aid in determining whether or not another wireless communications provider could co-locate on/near their facilities if approved.

13. **FCC Compliance**. Documentation prepared by a qualified radio frequency engineer that demonstrates the proposed wireless communication facility will operate in compliance with Section 1.1301, et seq., of Title 47 of the Code of Federal Regulations or any successor regulations. Documentation of FCC compliance shall be required for all wireless communication facility permits, including permit modifications.
14. **Authorization and License Information.** A letter of authorization from the property owner and the communications carrier that demonstrates knowledge and acceptance of the applicant's proposed project's structures and uses on the subject property. This information shall also include a copy of the FCC radio spectrum lease agreement or the FCC registration number (FRN).
15. **Easements**. Identification of any necessary easements.
16. **Third-Party Technical Review**. A statement, at the discretion of the Community Development Director, that the applicant will pay the reasonable actual costs and a reasonable administrative fee for the City to hire an independent qualified radio frequency or electrical engineers to evaluate any technical aspect of the proposed telecommunication facility including, but not limited to, compliance with applicable federal emission standards, feasibility of co-location, need for proposed location and suitability of alternative sites, potential for interference with existing or planned public safety emergency response telecommunication facilities, or analysis of feasibility of alternative screening methods or devices.
17. **Noise/Acoustical Information.** Documentation that includes manufacturer's specifications for all noise-generating equipment, such as air conditioning units and back-up generators, as well as a scaled diagram or site plan that depicts the equipment location in relation to adjoining properties.
18. **Hazardous Materials.** Documentation of the quantity, type, and storage location for containment of hazardous materials, such as the fuel and battery back-up equipment, proposed for the wireless communication facility.
19. **Maintenance and Monitoring Plan**. A maintenance and monitoring plan that describes the type and frequency of required maintenance activities to ensure continuous upkeep of the facility, its associated equipment, and any proposed landscaping, during the life of the permit.
20. **Additional Information**. Additional information determined by the Community Development Department as necessary for processing the requested wireless communication facility permit.

C. Length of Approvals. All approvals for wireless communications facilities shall be valid for an initial maximum period of ten years. An approval may be extended administratively from the initial approval date for a subsequent five years and may be extended administratively every five years thereafter upon the verification of the wireless communications provider's continued

Attachment: Draft Zoning Code Public Review 02.04.2016 (1392 : Zoning Code Update)

compliance with this chapter and with the findings and conditions of approval under which the application was originally approved. Costs associated with the review process shall be borne by the wireless communications provider. This does not apply to preexisting legal nonconforming uses. The Community Development Director's decision to deny a renewal may be appealed pursuant to Chapter 17.152 (Appeals).

D. Permit Revocation.

1. **Basis for Revocation**. Should the Community Development Director determine that the wireless communications facility may no longer comply with this chapter, the Community Development Director may schedule a public hearing before the Planning Commission at which the Planning Commission may modify or revoke an approval. The Planning Commission may revoke the permit upon making one or more all of the following finding:

   a. The wireless communications provider has failed to submit evidence that the wireless communications facility complies with the current Federal Communications Commission radio frequency standards.

   b. The wireless communications facility fails to comply with the requirements of this chapter as they exist at the time of renewal, and the wireless communications provider has failed to supply assurances acceptable to the Community Development Director that the facility will be brought into compliance within 90 days.

   c. The wireless communications provider has failed to comply with the conditions of approval imposed.

   d. The wireless communications facility has not been properly maintained as required in this chapter.

   e. The wireless communications provider has not agreed in writing to upgrade the wireless communications facility within 6 months to minimize the facility's adverse visual impact to the greatest extent permitted by the technology that exists at the time of renewal. The Community Development Director, with the aid of an independent industry expert, shall determine if a new technology shall further minimize a facility's adverse visual impact and if a facility shall be required to be upgraded. A wireless communications facility shall not be upgraded unless it shall continue to comply with the requirements of this chapter, as they exist at the time of renewal.

2. **Notice to Provider.** A public hearing to consider the revocation of a permit may not be scheduled until the Community Development Director has first provided a written notice to the wireless communications provider identifying:

   a. The nature of the violation;

   b. A reasonable means to correct the violation; and

3. A reasonable time period to correct the violation of no less than 30 days from the date of notification or a lesser period if warranted by a public emergency.

E. Cessation of Operation.

Attachment: Draft Zoning Code Public Review 02.04.2016 (1392 : Zoning Code Update)

1. **Notice to City.** Wireless communications providers shall provide the City with a notice of intent to vacate a site a minimum of 30 days prior to the vacation.

2. **New Permit Required.** A new permit shall be required if a site is to be used again for the same purpose as permitted under the original permit if a consecutive period of 6 months have lapsed since cessation of operations.

3. **Removal of Equipment.**

   a. All equipment associated with a wireless communications facility shall be removed by the property owner after cessation of the use for more than 6 consecutive months, and the site shall be restored to its original pre-construction condition.

   b. Any access road installed shall also be removed by the property owner and the ground returned to its natural condition after continuous cessation of the use for more than six months unless the property owner establishes, to the satisfaction of the Community Development Director, that these sections of road are necessary to serve another use which is permitted or conditionally permitted and has been approved for the property or to provide access to adjoining parcels.

   c. An exception to this subsection may be made by the Community Development Director for an extension of up to twelve months if the property owner continues to make a good faith attempt to sell or lease the property as a wireless communications facility site, as certified by a licensed real estate broker who is under contract with a right to sell or lease the property.

F. Transfer of Ownership.

1. **Notification of City**. Any wireless communications provider that is buying, leasing, or is considering a transfer of ownership of an already approved facility shall submit a letter of notification of intent to the Community Development Director.

2. **Responsibilities.** In the event that the original permittee sells its interest in a wireless communication facility, the succeeding carrier shall assume all responsibilities concerning the project and shall be held responsible to the City for maintaining consistency with all project conditions of approval, including proof of liability insurance.

3. **Contact Information.** A new contact name for the project shall be provided by the succeeding carrier to the community development department within thirty days of transfer of interest of the facility.

17.104.050 Location Standards

A. Preferred Zoning Districts. Wireless communication facilities shall be located in the Community Commercial (C-C), Regional Commercial (C-R), and Industrial (I) zoning districts, except they may not be sited within 500 feet of a residential zoning district.

1. **Exceptions to preferred zoning districts.** Wireless communication facilities may be sited outside the preferred zoning districts and within coastal areas described above only in

Attachment: Draft Zoning Code Public Review 02.04.2016 (1392 : Zoning Code Update)

situations where the applicant can demonstrate to the satisfaction of the Planning Commission that:

a. The proposed wireless communication facility would eliminate or substantially reduce one or more significant gaps in the applicant carrier's network; and

b. There are no viable, technically feasible, and environmentally (e.g., visually) equivalent or superior potential alternatives (i.e., sites/facility types) outside the restricted zoning districts or coastal areas that could eliminate or substantially reduce said significant gap(s).

B. Preferred Locations. To the extent feasible, and in the following order of priority, new wireless communication facilities shall be sited in the following locations:

1. Co-location on an existing wireless communication facility with adequate height and structure to accommodate additional wireless communication facilities.
2. Facade- or roof-mounted facilities in the Industrial (I) zoning district.
3. Facade- or roof-mounted facilities in the Regional Commercial (C-R) or Community Commercial (C-C) zoning districts.
4. Sites that are not highly visible from adjacent roadways, public areas, parks, schools, or other visually sensitive areas, as determined by the Community Development Director.

C. Non-Preferred Locations. To the extent feasible, wireless communication facilities should not be sited in the following locations:

1. Areas within 3,000 feet of the coastline.
2. Areas within 500 feet of a school property or a skilled nursing facility that cares for patients on a long-term basis.
3. Areas that extend into or impede access to a public beach.
4. Within environmentally sensitive habitat areas (ESHA) identified in Chapter 17.64 (Environmentally Sensitive Habitat Areas) and other environmentally sensitive areas as identified in the General Plan.
5. On a structure, site or in a district designated as a Historic Landmark.
6. Within a 500 feet buffer around the following zoning districts:
   a. Single-Family Residential (R-1), Multi-Family Residential (RM), and Mobile Home Park (MH).
   b. Village Mixed Use (MU-V) and Neighborhood Mixed Use (MU-N).
   c. Visitor Accommodations (VA).
   d. Parks and Open Space (P/OS).
   e. Community Facility (CV).

Attachment: Draft Zoning Code Public Review 02.04.2016 (1392 : Zoning Code Update)

D. Historic and Archaeological Resources. Wireless telecommunication facilities located on historic features (as defined in Chapter 17.84), a national or California registered historic building, or within a designated historic district, shall be limited to facade-mounted facilities only and integrated architecturally with the style and character of the structure or otherwise made unobtrusive. No wireless communications facility shall be sited such that its design and/or construction will damage an archeological site.

17.104.060 Development Standards

A. Height. Maximum permitted height of a wireless communication facilities is identified in Section 17.04.080 (Antenna Siting and Mounting Techniques) for each specific types of permitted facility.

B. Setbacks

1. Wireless communication facilities shall comply with all applicable setback regulations of the zoning district in which they are situated. All setbacks shall be measured from the furthest extent of a wireless communications facility to the closest applicable property line or structure, with the exception of equipment shelters. Equipment shelters shall be measured from the outside wall of the shelter to the closest applicable property line or structure.
2. Underground equipment shelters or cabinets may adjoin property lines, if approved by the Building Official.
3. Ground-mounted antennas and related equipment shall not be located in front of main structures and/or along major street frontages where they will be readily visible.
4. Ground-mounted wireless communication facilities shall be set back a distance equal to the total facility height or 50 feet, whichever is greater, from any offsite dwelling unit.
5. The clear vertical height under a projection shall be at least 15 feet.

C. Projections into the Public Right-of-Way.

1. Ground-mounted antennas and related equipment shall not extend over a sidewalk, street or other public right-of-way, except that ground-mounted antennas and related equipment on streetlight poles, traffic signals, and existing telephone poles may extend over a sidewalk or street, subject to the standards for small cell and distributed antenna systems (17.104.070) .
2. Roof-mounted and facade-mounted antennas and their related equipment shall not extend over a street or sidewalk.

D. Landscaping. Landscaping shall be provided when necessary to screen the wireless communication facility from being prominently visible from a public viewpoint. All landscaping shall be installed, irrigated, and maintained consistent with Chapter 17.72 (Landscaping) for the life of the permit.

E. Lighting. Any necessary security lighting shall be down-shielded and controlled to minimize glare or light levels directed at adjacent properties.

Attachment: Draft Zoning Code Public Review 02.04.2016 (1392 : Zoning Code Update)

F. Access Roads. All wireless communications facilities shall use existing access roads, where available. Unless visual impacts can be adequately mitigated, no new access roads shall be allowed with any proposed wireless communications facility.

G. Co-location. Where technically, legally, and fiscally feasible, co-location of new wireless communication facilities onto existing telecommunication ground-mounted and freestanding monopole towers is required. Co-location may require that height extensions be made to existing towers or wireless telecommunications facilities to accommodate additional users, or may involve constructing new multi-user facilities that replace existing single-user capacity towers.

Note: The requirement in Subsection H to fully conceal facilities is new.

H. Stealth/Screened Facilities. All proposed wireless telecommunication facilities shall be fully screened from public view unless the Planning Commission finds that a fully concealed facility is infeasible to meet the applicant's service and technical requirements. Fully concealed facilities shall comply with the following standards

1. All facility components, including all antennas, antenna panels, cables, wires, conduit, mounting brackets, and support equipment, shall be fully screened, and mounted either inside the building or structure, or behind screening elements and not on the exterior face of the building or structure.

2. Screening materials shall match in color, size, proportion, style, and quality with the exterior design and architectural character of the structure and the surrounding visual environment. If determined necessary by the City, screening to avoid adverse impacts to views from land or buildings at higher elevations shall be required.

3. When a facility is proposed within an existing or new architectural feature such as a steeple, religious symbol, tower, cupola, clock tower, or sign tower, the facility shall be architecturally compatible with the existing structure or building.

I. Visual Effect. When the Planning Commission finds that a fully concealed facility is infeasible, the proposed facility shall comply with the following design standards:

1. **Antenna Size and Visibility**. The applicant shall use the smallest and least visible antennas feasible to accomplish coverage objectives.

2. **Facility Concealment.** Facilities shall be concealed from public view to the greatest extent possible.

3. **Design Compatibility**. Facilities and screening shall be compatible in scale and integrated architecturally with the design of surrounding buildings or the natural setting.

4. **Ground Mounted Equipment.**

   a. **Design.** Whenever possible, base transceiver stations, equipment cabinets and buildings, back-up generators, and other equipment associated with building-mounted antennas shall be installed within the existing building envelope. If this is not feasible, the equipment shall be low profile, screened, fenced, landscaped, painted, or otherwise treated architecturally to minimize its appearance from off-site locations and to visually

blend with the surrounding natural and built environment. Equipment buildings shall be designed in an architectural style and constructed of exterior building materials that are consistent with surrounding development and/or land use setting (if applicable) and should be a visually pleasing feature.

b. **Height.** All ground-mounted base transceiver stations, equipment cabinets, and utility panels for telecommunications facilities shall be limited to a maximum height of 6 feet above grade unless other techniques are adopted to ensure minimal visual impact. Base transceiver stations, equipment cabinets, and utility panels that are taller may be partially buried underground or installed by use of another technique to maintain the 6 foot height limit. Greater height may be granted upon a finding that it is not possible to meet the height limitation and that adequate screening of the equipment is provided.

J. Advertising. No advertising signage or identifying logos shall be displayed on wireless telecommunications facilities, except for small identification plates used for emergency notification or hazardous or toxic materials warning.

K. Number of Antennas and Facilities. The Community Development Director shall determine the number of antennas allowed per site on a case-by-case basis, or defer to the Planning Commission, with the goal of minimizing adverse visual impacts.

17.104.070 Small Cells and Distributed Antenna Systems

Note: Standards for small cells and distributed antenna systems in this section are new.

A. Purpose and Applicability. This section establishes standards for single antenna "small cell" facilities and Distributed Antenna System (DAS) installations proposed to be mounted to a light or utility pole within the public right-if-way.

B. Permits Required. Small cell and DAS facilities mounted to a utility pole that are located outside of non-preferred locations (17.104.050.C) and meet the design standards in paragraph C below may be installed with a Minor Design Permit and Minor Use Permit. Facilities that do not comply with these standards require Planning Commission approval of a Conditional Use Permit and Design Permit.

C. Design Standards.

1. **All Facilities**. All small cell and DAS facilities shall comply with the following design standards:

   a. Antennas, brackets, and cabling shall all be painted a single color that matches the pole color.

   b. Unnecessary equipment manufacturer decals shall be removed or painted over.

2. **Steel Pole Facilities**. Small cell and DAS facilities mounted to a steel light pole shall comply with the following design standards:

   a. All equipment and cabling shall be located in the pole and concealed from view.

Attachment: Draft Zoning Code Public Review 02.04.2016 (1392 : Zoning Code Update)

b. Antennas shall be located on the top of the pole as a vertical extension of the pole. Antennas and equipment may not be mounted onto the side of the pole.

c. Antennas shall be contained within a maximum 14-inch wide enclosure on the top of the pole.

3. **Wood Pole Facilities**. Small cell and DAS facilities mounted to a wood utility pole shall comply with the following design standards:

a. Equipment enclosures shall be as narrow as possible with a vertical orientation to minimize its visibility when attached to the pole. The equipment mounting base plates may be no wider than the pole.

b. Equipment shall be stacked close together on the same side of the pole.

c. A line drop (no electric meter enclosure) shall be used if allowed by the utility company.

d. Shrouds, risers, or conduit shall be used to reduce the appearance of cluttered or tangled cabling.

e. Side-mounted antennas shall be attached to the pole using an arm with flanges/channels that reduces the visibility of cabling and passive RF gear.

f. Top-mounted antennas may be no wider than the width of the pole top and shall be painted a color that matches the pole.

17.104.080 Antenna Siting and Mounting Techniques

A. Preferred Techniques. The following wireless telecommunications facilities and mounting techniques are listed in order of preference:

1. Building-concealed facilities.
2. Facade-mounted facilities.
3. Roof-mounted facilities.
4. Ground-mounted facilities.
5. Freestanding monopole facilities.

Note: Identification of building-concealed facilities as a preferred antenna siting and mounting technique is new.

B. Building-Concealed Facilities.

1. Building-concealed wireless communication facilities shall not exceed the maximum height limits of the zoning district in which the building is located.

2. An existing building that exceeds the maximum height limit may be used to conceal a wireless communication facility if the existing height was legally established, and the nonconforming height would not increase by adding the wireless communication facility.

C. Facade-Mounted Facilities.

Attachment: Draft Zoning Code Public Review 02.04.2016 (1392 : Zoning Code Update)

1. Facade-mounted antennas shall be integrated architecturally with the style and character of the structure or otherwise be made as unobtrusive as possible.
2. Antennas shall be located entirely upon an existing or newly created architectural feature so as to be completely screened from view.
3. To the extent feasible, facade-mounted antennas should not be located on the front or most prominent facade of a structure and should be located out of the pedestrian line-of-sight unless stealth techniques will reasonably eliminate visual impacts and are designed to appear as an integral part of the structure.
4. Facade-mounted equipment shall not project more than 18 inches from the face of the building or other support structure, unless specifically authorized by the Community Development Director.
5. Screening of facade-mounted equipment shall be painted a color to match the color of the building façade to which it is attached.
6. Facade-mounted antennas shall be camouflaged by incorporating the antennas as part of a design element of the building or by painting and/or texturing to match exterior wall background.
7. Antennas and the associated mountings shall be of a scale compatible with the building and shall generally not project beyond a maximum of 18 inches from the face of the building.
8. Facade-mounted antennas shall be mounted so that the foot of the antenna structure, at a minimum, is 10 feet above ground.

D. Roof-mounted Facilities.

1. Roof-mounted antennas are not allowed on residential buildings unless the Planning Commission finds that no other reasonable alternative is available such as a commercial building that meets the requirements of the service provider.
2. Roof-mounted antennas shall not be allowed when they are placed in locations where they significantly affect scenic views. However, such facilities may be allowed with incorporation of appropriate stealth techniques.
3. No roof-mounted antennas, including support structures, may exceed 6 feet in height above the parapet of the roof. A visual analysis demonstration or engineering analysis justifying necessity is required to exceed the 6 feet height limit.
4. The visual analysis shall demonstrate that views of the facility are minimized or are substantially screened from residential land uses, or other sensitive land uses such as parks, schools, or major streets. Alternatively, an engineering analysis may justify the height of the proposed wireless communications facility. The Community Development Director may require an independent review, paid for in advance by the applicant, to evaluate the applicant's request. Factors to be considered include whether or not another site exists where the standards can be met; whether there is another method of installation that would result in a project that complies with the standards, whether the addition of another wireless

Attachment: Draft Zoning Code Public Review 02.04.2016 (1392 : Zoning Code Update)

telecommunications facility would allow the reduction in height of the proposed facility; and whether there is any other technically feasible method of siting the facility that would reduce the height. If the Planning Commission determines that the additional height is necessary, additional screening may be required to mitigate adverse visual impacts.

5. All roof-mounted antennas shall be located in an area of the roof where the visual impact is minimized. Screening panels may be used to mitigate visual impacts but must be designed to blend with the architecture of the building in terms of scale, material and color. The cost to provide such screening of visual equipment shall not by itself provide justification to allow conspicuous equipment or antennas to remain visible.

6. All roof-mounted facilities shall be painted with a non-reflective matte finish using an appropriate color that blends with the backdrop. The final choice of colors shall be determined by the Community Development Department on a case-by-case basis.

7. Whenever feasible, all rooftop equipment installations shall be set back such that they are not viewed from the street. The equipment cabinets, base transceiver stations, cables and other appurtenant equipment, if located on the rooftop of buildings, shall be so located as to be minimally visible from public rights-of-way. Roof screening in compliance with this section may be required in cases where equipment is considered a visual impact.

E. Ground-mounted Facilities.

1. Whenever possible, proposed ground-mounted facilities shall be located within easy reach of existing access roads.

2. Ground-mounted facilities shall be painted using non-reflective matte finished shades designed to blend with the backdrop. However, the final choice of colors shall be made on a case-by-case basis upon determination of the color that best blends into the backdrop. If equipment cannot be painted, adequate screening shall be provided that blends with the predominant architectural design and material of adjacent buildings, including material, finish and texture. A photo simulation may be required to illustrate the blending.

3. Landscaping shall be used as a substantial natural screening to minimize any visual impacts. All proposed vegetation shall be compatible with existing vegetation in the area.

4. All ground-mounted antennas that are located on undeveloped sites, where allowed, shall be converted to roof- or facade-mounted antennas with the development of the site when technically feasible.

F. Freestanding Monopole Facilities.

1. Freestanding monopoles shall be located and designed to minimize visual impacts. For example, a monopole could be located in a grove of existing trees so that natural screening or background is provided. Freestanding monopoles in high visibility locations shall incorporate "stealth techniques" to camouflage them as a piece of art/sculpture, a clock tower, flag pole, tree or other interesting, appropriate, and compatible visual form. Such stealth installations shall be used when the siting and surrounding environment helps them to blend with the setting. Freestanding monopoles may not be located within the required front

Attachment: Draft Zoning Code Public Review 02.04.2016 (1392 : Zoning Code Update)

yard setback of any property, unless appropriate architectural elements for a "stealth facility" are incorporated in the design of the monopole.

2. Freestanding monopoles are prohibited in the Village Mixed Use (MU-V) zoning district unless all other types of wireless communication facility structures are considered not technically feasible.

3. Freestanding monopoles shall generally not be allowed within 1,000 feet of each other except when co-location is infeasible.

4. Freestanding monopoles shall be designed to maximize opportunities for the co-location of other facilities on the monopole. The applicant shall agree to accommodate future co-located facilities as a condition of approval of a freestanding monopole.

5. Freestanding monopoles shall be designed at the minimum functional height required. The height of monopoles shall be reviewed on a case-by-case basis for the visual impact on the neighborhood and community. The Community Development Director may require an independent review through a supplementary report, paid for in advance by the applicant, to evaluate the applicant's request. Factors to be considered include whether or not another site exists where a more preferred method of installation could be met, whether the future addition of another wireless telecommunications facility could affect the future height of the proposed facility, and whether there is any other technically feasible method of siting the facility that would reduce the overall proposed height.

17.104.090 Modifications to Existing Facilities

Note: Modifications allowed with an Administrative permit in this section are new as required by new FCC regulations.

A. Modifications Allowed with an Administrative Permit. One or more of the following modifications to an existing wireless communication facility is allowed with an Administrative Permit:

1. Replacement of wireless communication facility equipment when the design of equipment remains the same but the size of equipment decreases or remains the same.

2. Co-locations on an existing wireless communication facility that are included in and authorized by the existing permit.

3. Co-location on an existing building-concealed facility that is subject to an existing City permit, or an increase to the size of existing antennas within a building-concealed facility that is subject to an existing City permit, when the proposed modifications do not result in changes to the external features of the building-concealed facility (such as a building's architectural features) and when the proposed wireless communication facility equipment remains hidden within the building-concealed facility.

4. Additional equipment mounted onto an existing wireless communication facility, excluding co-location, that is attached behind and concealed by existing directional panel or dish

Attachment: Draft Zoning Code Public Review 02.04.2016 (1392 : Zoning Code Update)

antenna, or that is concealed by an existing stealth design feature. Photographic or other visual evidence shall be supplied that demonstrates the additional equipment will not be visible from any public viewpoint.

5. Modifications to equipment located within, and visually hidden by, an existing equipment shelter or cabinet, such as replacing parts and other equipment accessories, increasing the size of the fuel tank and modifying or replacing an existing back-up generator in compliance with permitted noise levels.

6. New or replacement equipment cabinets or shelters that are physically located within the existing permitted site area, and when the new or replacement equipment is screened by existing vegetation or fencing if visible from a public viewpoint, and when the new or replacement equipment does not generate noise that exceeds permitted levels.

7. Non-commercial antenna mounted on an existing commercial or public safety wireless communication facility when the antenna is not visible from a public viewpoint and would not increase the height of the wireless communication facility.

8. Modifications that constitute a Section 6409(a) Modification, provided that each modification is in conformance with all applicable standards contained in this chapter. Decisions of the Community Development Director on requested Section 6409(a) Modifications are final when rendered and are not subject to appeal.

B. Other Modifications. Other modifications to an existing facility which cannot be processed through an Administrative Permit as allowed by Paragraph A (Modifications Allowed with an Administrative Permit) above require a modification to the original Design Permit and Conditional Use Permit and shall be processed as required by this chapter for new facilities.

17.104.100 Operational Standards

A. General Compliance. All wireless communications facilities, except for exempt facilities described in Section 17.104.030?, shall comply with all applicable goals, objectives and policies of the General Plan/Local Coastal Program, area plans, zoning regulations and development standards; the California Coastal Act; and are subject to the California Environmental Quality Act (CEQA).

B. Compliance with FCC Regulations. Wireless communication facilities shall comply with all Federal Communication Commission (FCC) rules, regulations, and standards. To demonstrate compliance, the Community Development Director may require the wireless telecommunications service provider to submit a certification by a licensed engineer that the emissions are within the current FCC standards and a report on the level of cumulative radio frequency emissions within 800 feet of the subject antenna.

C. Change in Federal or State Regulations. All wireless communications facilities shall meet the current standards and regulations of the Federal Communications Commission, the California Public Utilities Commission, and any other agency of the federal or State government with the authority to regulate wireless communications providers. If such standards and regulations are changed, the wireless communications provider shall bring its facilities into compliance with such

Attachment: Draft Zoning Code Public Review 02.04.2016 (1392 : Zoning Code Update)

revised standards and regulations within ninety days of the effective date of such standards and regulations, unless a more stringent compliance schedule is mandated by the controlling federal or state agency. Failure to bring wireless communications facilities into compliance with such revised standards and regulations shall constitute grounds for the immediate removal of such facilities at the wireless communications provider's expense.

D. Access Control. All facilities shall be designed to be resistant to and minimize opportunities for unauthorized access, climbing, vandalism, graffiti, and other conditions that would result in hazardous conditions, visual blight, or attractive nuisances. The Community Development Director may require the provision of warning signs, fencing, anti-climbing devices, or other techniques to prevent unauthorized access and vandalism when, because of their location and/or accessibility, antenna facilities have the potential to become an attractive nuisance. The design of the fencing and other access control devices shall be subject to design review.

E. Noise.

1. All wireless communications facilities shall be constructed and operated in such a manner as to minimize the amount of noise impacts to adjacent uses and activities. Noise attenuation measures shall be required for all air-conditioning units. Backup generators shall only be operated during power outages and for testing and maintenance purposes. At any time, noise attenuation measures may be required by the Community Development Director when deemed necessary. Facilities shall comply with all applicable noise standards in the General Plan and Municipal Code.

2. Testing and maintenance activities of wireless communications facilities which generate audible noise shall occur between the hours of eight a.m. and five p.m., weekdays (Monday through Friday, non-holiday) excluding emergency repairs, unless allowed at other times by the Community Development Director. Testing and maintenance activities, which do not generate audible noise, may occur at any time, unless otherwise prohibited by the Community Development Director.

F. Interference. All wireless communications facilities shall be operated in a manner which complies with the Federal Communication Commission's regulations regarding signal interference.

G. Signs. All wireless communications providers shall provide signage, as required by the Community Development Director, which shall identify the name and phone number of the wireless communications provider for use in case of an emergency.

1. The design, materials, colors and location of the identification signs shall be subject to Director review and approval.

2. If at any time a new wireless communications provider takes over operation of an existing wireless communications facility, the new wireless communications provider shall notify the Community Development Department of the change in operation within thirty days and the required and approved signs shall be updated within thirty days to reflect the name and phone number of the new wireless service provider. The colors, materials and design of the updated signs shall match those of the required and approved signs.

Attachment: Draft Zoning Code Public Review 02.04.2016 (1392 : Zoning Code Update)

H. Maintenance. All wireless communications facilities, including, but not limited to, antennas, towers, equipment, cabinets, structures, accessory structures, and signs shall be maintained by the wireless service provider in good condition. This shall include keeping all wireless communications facilities graffiti free and maintaining security fences in good condition.

I. Service after Natural Disaster. All wireless communications facilities providing service to the government or general public shall be designed to survive a natural disaster without interruption in operation. To this end, the following measures shall be implemented:

1. Nonflammable exterior wall and roof covering shall be used in the construction of all aboveground equipment shelters and cabinets;
2. Openings in all aboveground equipment shelters and cabinets shall be protected against penetration by fire and windblown embers;
3. The material used as supports for the antennas shall be fire resistant, termite proof, and subject to all the requirements of the Uniform Building Code;
4. Wireless communications facility towers shall be designed to withstand the forces expected during the "maximum credible earthquake." All equipment mounting racks and attached equipment shall be anchored in such a manner that such a quake will not tip them over, throw the equipment off its shelves, or otherwise act to damage it;
5. All connections between various components of the wireless communications facility and with necessary power and telephone lines shall be protected against damage by fire, flooding and earthquakes;
6. Measures shall be taken to keep wireless communications facilities in operation in the event of a disaster;
7. A building permit shall be required for the construction, installation, repair or alteration of all support structures for wireless communications facilities equipment. Wireless communications facilities must be stable and must comply with the Uniform Building Code and any conditions imposed as a condition of issuing a building permit.

17.104.110 Miscellaneous Requirements

A. Temporary Wireless Communication Facilities.

1. A temporary wireless communication facility, such as a "cell-on-wheels" (COW), may be used to replace wireless communication facility services during the relocation or rebuilding process of an existing facility, during festivals or other temporary events and activities that otherwise require a permit under this chapter, and during public emergencies. Once the relocation or rebuilding process, temporary event, or emergency is complete, the temporary facility shall be removed from the site as soon as possible.
2. A temporary wireless communication facility shall be processed as an accessory use under a proposed or existing permit when used during the relocation or rebuilding process of an existing wireless communication facility, or when used for a festival or other temporary event or activity that otherwise requires a planning permit.

Attachment: Draft Zoning Code Public Review 02.04.2016 (1392 : Zoning Code Update)

B. Nonconforming Facilities.

1. A wireless communications facility which was approved by the City prior to the effective date of this chapter and which does not comply with this chapter on the date of its adoption shall be considered a legal nonconforming use.
2. Legal nonconforming wireless communications facilities shall be permitted to remain until the lessor's lease, including exercised renewals, with the property expires.
3. Legal nonconforming wireless communications facility shall not be altered or modified unless approved by the Community Development Director subject to the determination that the alteration or modification will cause the wireless communications facility to be in greater conformance with this chapter.
4. At the Community Development Director's request, the wireless communications provider shall provide a written summary certifying the commencement date and expiration date of any lease, license, property right, or other use agreement for the wireless communications facility, including any options or renewal terms contained therein.

17.104.120 Severability

If any section or portion of this chapter is found to be invalid by a court of competent jurisdiction, such finding shall not affect the validity of the remainder of the chapter, which shall continue in full force and effect.

Attachment: Draft Zoning Code Public Review 02.04.2016 (1392 : Zoning Code Update)

PART 4

Permits and Administration

Chapter 17.108 - Administrative Responsibility……108-1

17.108.010 Purpose
17.108.020 Planning Agency
17.108.030 Review and Decision-Making Authority
17.108.040 Design Review Committee

Chapter 17.112 - Permit Application and Review……..112-1

17.112.010 Purpose
17.112.020 Application Preparation and Filing
17.112.030 Application Fees
17.112.040 Application Review
17.112.050 Multiple Permit Applications
17.112.060 Project Evaluation and Staff Reports
17.112.070 Environmental Review
17.112.080 Applications Deemed Withdrawn

Chapter 17.116 - Administrative Permits……116-1

17.116.010 Purpose
17.116.020 When Required
17.116.030 Review Authority
17.116.040 Application Submittal, Review, and Action
17.116.050 Public Notice and Hearing
17.116.060 Conditions of Approval
17.116.070 Appeals and Post-Decision Procedures

Chapter 17.120 - Design Permits…… 120-1

17.120.010 Purpose
17.120.020 Types of Design Permits
17.120.030 When Required
17.120.040 Application Submittal and Review
17.120.050 Design Review Committee
17.120.060 Public Notice and Hearing
17.120.070 Design Review Criteria
17.120.080 Findings for Approval
17.120.090 Conditions of Approval
17.120.100 Appeals and Post-Decision Procedures

Attachment: Draft Zoning Code Public Review 02.04.2016 (1392 : Zoning Code Update)

Chapter 17.124 - Use Permits……..124-1

17.124.010 Purpose
17.124.020 When Required
17.124.030 Review Authority
17.124.040 Application Submittal and Review
17.124.050 Public Notice and Hearing
17.124.060 Considerations
17.124.070 Findings for Approval
17.124.080 Conditions of Approval
17.124.090 Appeals and Post-Decision Procedures
17.124.100 Master Use and Tenant Use Permits

Chapter 17.128 - Variances…… 128-1

17.128.010 Purpose
17.128.020 When Allowed
17.128.030 Review Authority
17.128.040 Application Submittal and Review
17.128.050 Public Notice and Hearing
17.128.060 Findings for Approval
17.128.070 Conditions of Approval
17.128.080 Precedent
17.128.090 Appeals and Post-Decision Procedures

Chapter 17.132 - Sign Permits……132-1

17.132.010 Purpose
17.132.020 Types of Sign Permits
17.132.030 When Required
17.132.040 Review Authority
17.132.050 Application Submittal and Review
17.132.060 Public Notice and Hearing
17.132.070 Findings for Approval
17.132.080 Conditions of Approval
17.132.090 Post-Decision Procedures

Chapter 17.136 - Minor Modifications……136-1

17.136.010 Purpose
17.136.020 When Allowed
17.136.030 Review Authority
17.136.040 Application Submittal and Review
17.136.050 Public Notice and Hearing
17.136.060 Findings for Approval
17.136.070 Conditions of Approval
17.136.080 Appeals and Post-Decision Procedures

Attachment: Draft Zoning Code Public Review 02.04.2016 (1392 : Zoning Code Update)

Chapter 17.140 - Reasonable Accommodations……140-1

17.140.010 Purpose
17.140.020 When Allowed
17.140.030 Review Authority
17.140.040 Public Notice of Process Availability
17.140.050 Application Requirements
17.140.060 Review Procedure
17.140.070 Criteria for Decision
17.140.080 Conditions of Approval
17.140.090 Appeals and Post-Decision Procedures

Chapter 17.144 - Zoning Code Amendments……144-1

17.144.010 Purpose
17.144.020 Initiation
17.144.030 Application
17.144.040 Planning Commission Hearing and Action
17.144.050 City Council Hearing and Action
17.144.060 Findings for Approval
17.144.070 Effective Dates

Chapter 17.148 - Public Notice and Hearings…….. 148-1

17.148.010 Purpose
17.148.020 Notice of Hearing
17.148.030 Notice of Pending Action
17.148.040 Scheduling of Hearing
17.148.050 Hearing Procedure
17.148.060 Recommendations
17.148.070 Decision and Notice

Chapter 17.152 - Appeals…… 152-1

17.152.010 Purpose
17.152.020 Appeal Subjects and Jurisdiction
17.152.030 Filing and Processing of Appeals
17.152.040 Judicial Review

Chapter 17.156 - Post-Decision Procedures……...156-1

17.156.010 Purpose
17.156.020 Issuance of Permits
17.156.030 City Council Decisions
17.156.040 Effective Date of Decision
17.156.050 Conformance to Approved Plans
17.156.060 Performance Guarantees

Attachment: Draft Zoning Code Public Review 02.04.2016 (1392 : Zoning Code Update)

17.156.070 Changes to an Approved Project
17.156.080 Time Limits and Extensions
17.156.090 Resubmittals
17.156.100 Permits to Run with the Land
17.156.110 Permit Revocation

Attachment: Draft Zoning Code Public Review 02.04.2016 (1392 : Zoning Code Update)

Chapter 17.108 – ADMINISTRATIVE RESPONSIBILITY

Sections:

17.108.010 Purpose
17.108.020 Planning Agency
17.108.030 Review and Decision-Making Authority
17.108.040 Design Review Committee

17.108.010 Purpose

This chapter describes the authority and responsibilities of the City Council, Planning Commission, and the Community Development Director in the administration of the Zoning Code.

17.108.020 Planning Agency

The City Council, Planning Commission, and Community Development Director function as the Planning Agency and as the Advisory Agency in compliance with Government Code Section 65100.

17.108.030 Review and Decision-Making Authority

Table 17.108-1 shows the review and decision-making authority of the City Council, Planning Commission, and Community Development Director in the administration of the Zoning Code.

Note: Table 17.108-1 includes the following new types of permits and approvals: Administrative Permits, Minor Design Permits, Historic Resource Demolition Permits, Minor Use Permits, Minor Modifications, Certificates of Appropriateness, and Reasonable Accommodations. The purpose and requirements for these permits are described in subsequent chapters.

TABLE 17.108-1: REVIEW AND DECISION-MAKING AUTHORITY

Type of Action	Role of Authority [1]		
	Community Development Director	Planning Commission	City Council
Legislative Actions			
Development Agreements	Recommend	Recommend	Decision
General Plan Amendments	Recommend	Recommend	Decision
Zoning Code Amendments	Recommend	Recommend	Decision
Permits			
Administrative Permits	Decision	Appeal	Appeal

Attachment: Draft Zoning Code Public Review 02.04.2016 (1392 : Zoning Code Update)

Type of Action	Role of Authority [1]		
	Community Development Director	Planning Commission	City Council
Administrative Sign Permits	Decision	Appeal	Appeal
Sign Permits	Recommend	Decision	Appeal
Design Permits	Recommend	Decision	Appeal
Minor Design Permits	Decision	Appeal	Appeal
Coastal Permits	See 17.44.060 (Coastal Permit Requirements)		
Conditional Use Permits	Recommend	Decision	Appeal
Historic Resource Demolition Permits [2]	Recommend	Recommend/ Decision	Decision/Appeal
Master Use Permits	Recommend	Decision	Appeal
Minor Use Permits	Decision	Appeal	Appeal
Tenant Use Permits	Decision	Appeal	Appeal
Other Approvals			
Minor Modifications	Recommend	Decision	Appeal
Certificates of Appropriateness	Recommend	Decision	Appeal
Preliminary and Final Development Plans (PD)	Recommend	Recommend	Decision
Reasonable Accommodations	Decision	Appeal	Appeal
Variances	Recommend	Decision	Appeal

Notes:
[1] "Recommend" means that the review authority makes a recommendation to a higher decision-making body; "Decision" means that the review authority makes the final decision on the matter; "Appeal" means that the review authority shall consider and decide appeals of decisions of an earlier decision-making body, in compliance with Chapter 17.152 (Appeals).
[2] The Planning Commission is the decision-making authority on Historic Resource Demolition Permits applications for properties on the Historic Structures List. The City Council is the decision authority on Historic Resource Demolition Permits applications for Historic Landmarks.

17.108.040 Design Review Committee

Note: The Design Review Committee described in Section 17.108.040 replaces the existing Architecture and Site Review Committee. The role and membership of the Design Review Committee is similar but not identical to that of the Architecture and Site Review Committee.

A. Role. The role of the Design Review Committee is to review Design Permit applications and provide preliminary recommendations to the applicant prior to Planning Commission review. The Design Review Committee does not approve Design Permit applications or provide a recommendation to the Planning Commission. Instead, the Design Review Committee works with applicants to achieve the best possible

project design consistent with City policies and regulations prior to a hearing before the Planning Commission. The Design Review Committee only reviews Design Permit applications acted upon by the Planning Commission – the Committee does not review Minor Design Permit applications acted upon by the Community Development Director.

B. Membership. The Design Review Committee consists of seven members: two architects, a landscape architect, a historian, and City staff representing the Planning, Public Works, and Building Departments.

C. Appointment.

1. The Mayor appoints one architect, the landscape architect, and the historian members of the Design Review Committee. The Mayor may also appoint alternate architect, landscape architect, and historian members to serve in the absence of the regular members.

2. The second architect member of the Design Review Committee shall be a consultant to the City selected by the Community Development Director. The second architect member participates only in the review of multi-family projects, non-residential projects, and other significant projects as determined by the Community Development Director.

Attachment: Draft Zoning Code Public Review 02.04.2016 (1392 : Zoning Code Update)

Attachment: Draft Zoning Code Public Review 02.04.2016 (1392 : Zoning Code Update)

Chapter 17.112 – PERMIT APPLICATION AND REVIEW

Sections:

17.112.010 Purpose
17.112.020 Application Preparation and Filing
17.112.030 Application Fees
17.112.040 Application Review
17.112.050 Multiple Permit Applications
17.112.060 Project Evaluation and Staff Reports
17.112.070 Environmental Review
17.112.080 Applications Deemed Withdrawn

Note: This chapter adds new procedural requirements not in the existing Zoning Code to codify and standardize current City practice and comply with State law.

17.112.010 Purpose

This chapter establishes procedures for the preparation, filing, and processing of permits required by the Zoning Code. The term "permit" when used in this chapter refers to any action, permit, or approval listed in Table 17.108-1 (Review and Decision-Making Authority).

17.112.020 Application Preparation and Filing

A. Pre-Application Conference.

1. The City encourages prospective applicants to request a pre-application conference with the Community Development Department before completing and filing a permit application.
2. The purpose of this conference is to:
   a. Inform the applicant of City requirements as they apply to the proposed project;
   b. Inform the applicant of the City's review process;
   c. Identify information and materials the City will require with the application, and any necessary technical studies and information relating to the environmental review of the project; and
   d. Provide guidance to the applicant of possible project alternatives or modifications.
3. The pre-application conference and any information provided to prospective applicants by City staff shall not be construed as a recommendation for approval or denial of an application.

Attachment: Draft Zoning Code Public Review 02.04.2016 (1392 : Zoning Code Update)

4. Failure by City staff to identify all permit requirements shall not constitute a waiver of those requirements.

B. Application Contents.

1. All permit applications shall be filed with the Community Development Department on an official City application form.
2. Applications shall be filed with all required fees, information, and materials as specified by the Community Development Department.

C. Eligibility for Filing.

1. An application may only be filed by the property owner or the property owner's authorized agent.
2. The application shall be signed by the property owner or the property owner's authorized agent if written authorization from the owner is filed concurrently with the application.

17.112.030 Application Fees

A. Fee Schedule. Fees required to process permit applications are identified in the Planning Fee Schedule approved by the City Council.

B. Requirement of Payment.

1. The City may deem an application complete and begin processing the application only after all required fees have been paid.
2. Failure to pay any required supplemental application fees is a basis for denial or revocation of a permit application.

C. Refunds and Withdrawals.

1. Application fees cover City costs for public hearings, mailings, staff and consultant time, and the other activities involved in processing applications. Consequently, the City will not refund fees for a denied application.
2. In the case of an application withdrawal, the Community Development Director may authorize a partial refund of a deposit account based upon the pro-rated costs to date and the status of the application at the time of withdrawal.
3. Flat fees submitted in conjunction with a permit application are non-refundable.

17.112.040 Application Review

A. Review for Completeness.

1. **Initial Review.** The Community Development Department shall review each application for completeness and accuracy before it is accepted as being complete and officially filed.

Attachment: Draft Zoning Code Public Review 02.04.2016 (1392 : Zoning Code Update)

2. **Basis for Determination.** The Community Development Department's determination of completeness shall be based on the City's list of required application contents and any additional written instructions provided to the applicant in a pre-application conference and during the initial application review period.

3. **Notification of Applicant.** Within 30 calendar days of application filing, the Community Development Department shall inform the applicant in writing that the application is complete and has been accepted for processing, or that the application is incomplete and that additional information is required.

4. **Appeal of Determination.** When the Community Development Department has determined that an application is incomplete, and the applicant believes that the application is complete or that the information requested by the Community Development Department is not required, the applicant may appeal the Community Development Department's determination in compliance with Chapter 17.152 (Appeals).

5. **Submittal of Additional Information.**

   a. When the Community Development Department determines that an application is incomplete, the time used by the applicant to submit the required additional information is not considered part of the time within which the determination of completeness for resubmitted materials shall occur.

   b. Additional required information shall be submitted in writing.

   c. The Community Development Department's review of information resubmitted by the applicant shall be in compliance with subsection 'a' above, along with another 30-day period of review for completeness.

6. **Environmental Information.** After the Community Development Department has accepted an application as complete, the Department may require the applicant to submit additional information for the environmental review of the project in compliance with the California Environmental Quality Act (CEQA).

17.112.050 Multiple Permit Applications

A. Concurrent Filing. An applicant for a development project that requires the filing of more than one application (e.g., Zoning Map Amendment and a Conditional Use Permit) shall file all related applications concurrently unless the concurrent filing requirements are waived by the Community Development Director.

B. Concurrent Processing. The Community Development Department shall process multiple applications for the same project concurrently. Projects requiring multiple permit applications shall be reviewed and acted upon by the highest review authority designated by the Zoning Code for any of the applications (e.g., a project requiring a Zoning Map Amendment and a Conditional Use Permit shall have both applications

Attachment: Draft Zoning Code Public Review 02.04.2016 (1392 : Zoning Code Update)

decided by the City Council, instead of the Planning Commission acting on the Conditional Use Permit).

17.112.060 Project Evaluation and Staff Reports

A. Staff Evaluation. The Community Development Department shall review all permit applications to determine if they comply with the Zoning Code, the General Plan, and other applicable City policies and regulations.

B. Staff Report. For all permit applications requiring review by the Planning Commission or City Council, the Community Development Department shall prepare a staff report describing the proposed project and including, where appropriate, a recommendation to approve, approve with conditions, or deny the application.

C. Report Distribution. Staff reports shall be furnished to the applicant at the same time as they are provided to the review authority before action on the application.

17.112.070 Environmental Review

A. CEQA Review. After acceptance of a complete application, the Community Development Department shall review the project in compliance with the California Environmental Quality Act (CEQA) to determine whether:

1. The proposed project is exempt from the requirements of CEQA;
2. The proposed project is not a project as defined by CEQA;
3. A Negative Declaration may be issued;
4. A Mitigated Negative Declaration may be issued; or
5. An Environmental Impact Report (EIR) is required.

B. Compliance with CEQA. These determinations and, where required, the preparation of appropriate environmental documents shall be in compliance with CEQA and any adopted City CEQA guidelines.

C. Special Studies Required. Special studies, paid for in advance by the applicant, may be required to supplement the City's CEQA compliance review.

17.112.080 Applications Deemed Withdrawn

A. Response Required. If an applicant does not pay required supplemental fees or provide information requested in writing by the Community Development Department within nine months following the date of the letter, the application shall expire and be deemed withdrawn without any further action by the City.

B. Resubmittal. After the expiration of an application, future City consideration shall require the submittal of a new complete application and associated filing fees.

Attachment: Draft Zoning Code Public Review 02.04.2016 (1392 : Zoning Code Update)

Chapter 17.116 – ADMINISTRATIVE PERMITS

Sections:

17.116.010 Purpose
17.116.020 When Required
17.116.030 Review Authority
17.116.040 Application Submittal, Review, and Action
17.116.050 Public Notice and Hearing
17.116.060 Conditions of Approval
17.116.070 Appeals and Post-Decision Procedures

Note: Administrative Permits are a new type of permit.

17.116.010 Purpose

This chapter identifies the process to obtain an Administrative Permit. An Administrative Permit is required for uses permitted by-right yet subject to specific Zoning Code standards. An Administrative Permit is a ministerial procedure for the City to verify that a proposed use complies with all applicable standards and to ensure that the applicant understands and accepts these standards.

17.116.020 When Required

Uses that require an Administrative Permit are specified in the land use regulation tables for each zoning district found in Part 2 (Zoning Districts and Overlay Zones).

17.116.030 Review Authority

The Community Development Director takes action on all Administrative Permit applications.

17.116.040 Application Submittal, Review, and Action

A. An application for an Administrative Permit shall be filed and reviewed in compliance with Chapter 17.112 (Permit Application and Review).

B. Community Development Department staff shall review the application to verify compliance with the Zoning Code. If the project complies with the Zoning Code, the Community Development Director shall approve the application.

17.116.050 Public Notice and Hearing

No public notice or hearing is required for an Administrative Permit.

17.116.060 Conditions of Approval

No conditions of approval may be attached to the approval of an Administrative Permit.

17.116.070 Appeals and Post-Decision Procedures

A. Community Development Director decisions on Administrative Permits may be appealed to the Planning Commission as described in Chapter 17.152 (Appeals).

B. Post-decision procedures and requirements in Chapter 17.156 (Post-Decision Procedures) shall apply to Administrative Permits.

Attachment: Draft Zoning Code Public Review 02.04.2016 (1392 : Zoning Code Update)

Chapter 17.120 – DESIGN PERMITS

Sections:

17.120.010 Purpose
17.120.020 Types of Design Permits
17.120.030 When Required
17.120.040 Application Submittal and Review
17.120.050 Design Review Committee
17.120.060 Public Notice and Hearing
17.120.070 Design Review Criteria
17.120.080 Findings for Approval
17.120.090 Conditions of Approval
17.120.100 Appeals and Post-Decision Procedures

17.120.010 Purpose

This chapter establishes the process to obtain a Design Permit. A Design Permit is a discretionary action that enables the City to ensure that proposed development exhibits high quality design that enhances Capitola's unique identity and sense of place. The Design Permit process is also intended to ensure that new development and uses are compatible with their surroundings and minimize negative impacts on neighboring properties.

17.120.020 Types of Design Permits

The Zoning Code establishes two types of Design Permits: Design Permits reviewed and approved by the Planning Commission and Minor Design Permits reviewed and approved by the Community Development Director.

17.120.030 When Required

Note: The types of projects requiring a Design Permit and the review authority for these projects shown in Table 17.120-1 are different from current requirements in Section 17.63.070 of the existing Zoning Code.

A. Types of Projects. The types of projects that require a Design Permit, and the type of Design Permit for each project, are listed in Table 17.120-1. If a type of development project or activity is not specifically listed in Table 17.120-1, a Design Permit is not required.

Attachment: Draft Zoning Code Public Review 02.04.2016 (1392 : Zoning Code Update)

TABLE 17.120-1: PROJECTS REQUIRING DESIGN PERMITS

Type of Project	Type of Permit
Single-Family Residential Projects	
Ground floor additions to existing single-family homes where the addition is visible from a public street and does not exceed 15 ft. in height, except for exempt additions (Section 17.120.030.B)	Minor Design Permit
Accessory structures greater than 80 sq. ft. or 8 ft. in height	Minor Design Permit
Upper floor decks and balconies on the side or rear of a home that do not comply with standards in Section 17.16.030.B.8 (Decks and Balconies)	Design Permit
Upper floor additions to an existing single-family homes	Design Permit
New single-family homes	Design Permit
Multi-Family Residential Projects	
Ground-floor additions less than 3,000 sq. ft. to an existing multi-family structure	Minor Design Permit
Upper floor decks and balconies on the side or rear of a structure that do not comply with standards in Section 17.16.030.B.8 (Decks and Balconies)	Design Permit
Accessory structures including garbage and recycling enclosures	Minor Design Permit
Ground-floor additions 3,000 sq. ft. or more to an existing multi-family structure	Design Permit
Upper floor additions to an existing multi-family structure	Design Permit
New multi-family residential structures	Design Permit
Non-Residential Projects (Including Mixed-Use)	
Exterior modifications to an existing structure that do not increase the floor area of the structure	Minor Design Permit
Accessory structures greater than 80 sq. ft. including garbage and recycling enclosures	Minor Design Permit
Additions less than 3,000 sq. ft. to an existing non-residential structure where the addition is not visible from the primary street frontage	Minor Design Permit
Additions less than 3,000 sq. ft. to an existing non-residential structure where the addition is visible from the primary street frontage	Design Permit
Additions to an existing non-residential structure of 3,000 sq. ft. or more	Design Permit
New non-residential structures	Design Permit
Other Projects	
Fully screened building-concealed, facade-mounted, or roof-mounted wireless communication facility	Minor Design Permit
Other wireless communication facilities not eligible for a Minor Design Permit	Design Permit

B. Single-Family Exemptions. The following additions to a single-family dwelling are exempt from the Design Permit requirement:

1. Ground-floor single-story additions up to 400 square feet at the rear of the home.

Attachment: Draft Zoning Code Public Review 02.04.2016 (1392 : Zoning Code Update)

2. Enclosure of an existing recessed entrance up to 25 square feet.
3. Enclosure of an existing open porch up to 50 square feet.
4. Installation of bay windows.
5. A single accessory structures that does not exceed 80 square feet in floor area and 8 feet in height with no connection to electricity, water, or sewer.
6. Other similar minor additions to a single-family dwelling as determined by the Community Development Director.

17.120.040 Application Submittal and Review

A. General. An application for a Design Permit shall be filed and reviewed in compliance with Chapter 17.112 (Permit Application and Review). The application shall include the information required by the Community Development Department with all required application fees. It is the responsibility of the applicant to provide evidence in support of the findings required by Section 17.120.080 (Findings for Approval).

B. Streetscape Illustration. For all proposed new buildings, the applicant shall submit streetscape illustrations that includes neighboring structures within 100 feet of the side property lines.

C. Enhanced Visualization. The applicant shall submit enhanced project visualization materials when any of the following apply:

1. The project is proposed within a prominent or highly visible development site as determined by the Community Development Director.
2. The project would be located within or adjacent to vista points or visually-sensitive areas as identified in the General Plan.
3. The applicant is requesting a Variance for height.
4. The Community Development Director determines that enhanced visualization is necessary to determine if the findings for approval can be made for the proposed project.

17.120.050 Design Review Committee

A. Review Required. All Design Permit applications shall be reviewed by the Design Review Committee (Section 17.108.040) prior to review and action on the application by the Planning Commission.

B. Purpose of Review. The purpose of the Design Review Committee is to provide recommendations to the applicant on the design of the project based on Design Review criteria in Section 17.120.070. Applicants are encouraged to consider comments from the Design Review Committee and modify the project design as needed prior to Planning Commission consideration of the application.

Attachment: Draft Zoning Code Public Review 02.04.2016 (1392 : Zoning Code Update)

17.120.060 Public Notice and Hearing

A. Design Permits. The Planning Commission shall review and act on a Design Permit application at a noticed public hearing in compliance with Chapter 17.148 (Public Notice and Hearings).

> **Note:** The public notice of a pending action for Minor Design Permit applications in Subsection B below is new.

B. Minor Design Permits. Public notice of a pending action on a Minor Design Permit application shall be provided in compliance with Chapter 17.148 (Public Notice and Hearings). The Community Development Director shall hold a public hearing for a Minor Design Permit application only upon receiving a written request for a public hearing as provided in Section 17.148.030 (Notice of Pending Action).

17.120.070 Design Review Criteria

> **Note:** The Design Review Criteria in this section replace Design Review considerations in Section 17.63.090 of the existing Zoning Code.

When considering Design Permit applications, the City shall evaluate applications to ensure that they satisfy the following criteria, comply with the development standards of the zoning district, conform to policies of the General Plan and any applicable specific plan, and are consistent with any other policies or guidelines the City Council may adopt for this purpose. To obtain Design Permit approval, projects must satisfy these criteria to the extent they apply.

A. Community Character. The overall project design including site plan, height, massing, architectural style, materials, and landscaping contribute to Capitola's unique coastal village character and distinctive sense of place.

B. Neighborhood Compatibility. The project is designed to respect and complement adjacent properties. The project height, massing, and intensity is compatible with the scale of nearby buildings. The project design incorporates measures to minimize traffic, parking, noise, and odor impacts on nearby residential properties.

C. Historic Character. Renovations and additions respect and preserve existing historic structure. New structures and additions to non-historic structures reflect and complement the historic character of nearby properties and the community at large.

D. Sustainability. The project supports natural resource protection and environmental sustainability through features such as on-site renewable energy generation, passive solar design, enhanced energy efficiency, water conservation measures, and other green building techniques.

E. Pedestrian Environment. The primary entrances are oriented towards and visible from the street to support an active public realm and an inviting pedestrian environment.

F. Privacy. The orientation and location of buildings, entrances, windows, doors, decks, and other building features minimizes privacy impacts on adjacent properties and provides adequate privacy for project occupants.

G. Massing and Scale. The massing and scale of buildings complement and respect neighboring structures and correspond to the scale of the human form. Large volumes are divided into small components through varying wall planes, heights, and setbacks. Building placement and massing avoids impacts to public views and solar access.

H. Architectural Style. Buildings feature an architectural style that is compatible with the surrounding built and natural environment, is an authentic implementation of appropriate established architectural styles, and reflects Capitola's unique coastal village character.

I. Articulation and Visual Interest. Building facades are well articulated to add visual interest, distinctiveness, and human scale. Building elements such as roofs, doors, windows, and porches are part of an integrated design and relate to the human scale. Architectural details such as trim, eaves, window boxes, and brackets contribute to the visual interest of the building.

J. Materials. Building facades include a mix of natural, high-quality, and durable materials that are appropriate to the architectural style, enhance building articulation, and are compatible with surrounding development.

K. Parking and Access. Parking areas are located and designed to minimize visual impacts and maintain Capitola's distinctive neighborhoods and pedestrian-friendly environment. Safe and convenient connections are provided for pedestrians and bicyclists.

L. Landscaping. Landscaping is an integral part of the overall project design, is appropriate to the site and structures, and enhances the surrounding area.

M. Drainage. The site plan is designed to maximize efficiency of on-site drainage with runoff directed towards permeable surface areas and engineered retention.

N. Open Space and Public Places. Single-family dwellings feature inviting front yards that enhance Capitola's distinctive neighborhoods. Multi-family residential projects include public and private open space that is attractive, accessible, and functional. Non-residential development provides semi-public outdoor spaces, such as plazas and courtyards, which help support pedestrian activity within an active and engaging public realm.

O. Signs. The number, location, size, and design of signs complement the project design and are compatible with the surrounding context.

P. Lighting. Exterior lighting is an integral part of the project design with light fixtures designed, located, and positioned to minimize illumination of the sky and adjacent properties.

Attachment: Draft Zoning Code Public Review 02.04.2016 (1392 : Zoning Code Update)

Q. Accessory Structures. The design of detached garages, sheds, fences, walls, and other accessory structures relate to the primary structure and are compatible with adjacent properties.

R. Mechanical Equipment, Trash Receptacles, and Utilities. Mechanical equipment, trash receptacles, and utilities are contained within architectural enclosures or fencing, sited in unobtrusive locations, and/or screened by landscaping.

17.120.080 Findings for Approval

Note: The Design Permit findings in this section replace Design Permit findings in Section 17.63.110 of the existing Zoning Code.

To approve a Design Permit application, the review authority shall make all of the following findings:

A. The proposed project is consistent with the General Plan, Local Coastal Program, and any applicable specific plan, area plan, or other design policies and regulations adopted by the City Council.

B. The proposed project complies with all applicable provisions of the Zoning Code and Municipal Code.

C. The proposed project has been reviewed in compliance with the California Environmental Quality Act (CEQA).

D. The proposed development will not be detrimental to the public health, safety, or welfare or materially injurious to the properties or improvements in the vicinity.

E. The proposed project complies with all applicable Design Review criteria in Section 17.120.070 (Design Review Criteria)

17.120.090 Conditions of Approval

The Planning Commission or Community Development Director may attach conditions of approval to a Design Permit to achieve consistency with the General Plan, Local Coastal Program, Zoning Code, and any applicable specific plan or area plan adopted by the City Council.

17.120.100 Appeals and Post-Decision Procedures

A. Planning Commission decisions on Design Permits may be appealed to the City Council as described in Chapter 17.152 (Appeals).

B. Community Development Director decisions on Minor Design Permits may be appealed to the Planning Commission as described in Chapter 17.152 (Appeals).

C. Post-decision procedures and requirements in Chapter 17.156 (Post-Decision Procedures) apply to Design Permits.

Attachment: Draft Zoning Code Public Review 02.04.2016 (1392 : Zoning Code Update)

Chapter 17.124 – USE PERMITS

Sections:

17.124.010 Purpose
17.124.020 When Required
17.124.030 Review Authority
17.124.040 Application Submittal and Review
17.124.050 Public Notice and Hearing
17.124.060 Considerations
17.124.070 Findings for Approval
17.124.080 Conditions of Approval
17.124.090 Appeals and Post-Decision Procedures
17.124.100 Master Use and Tenant Use Permits

17.124.010 Purpose

This chapter describes the process to obtain Use Permits, which include Conditional Use Permits, Minor Use Permits, Master Use Permits, and Tenant Use Permits. A Use Permit is required for land uses that are generally appropriate within a zoning district, but potentially undesirable on a particular parcel or in large numbers. A Use Permit is a discretionary action that enables the City to ensure that a proposed use is consistent with the General Plan and will not create negative impacts to adjacent properties or the general public.

17.124.020 When Required

A. Land uses that require a Conditional Use Permit or a Minor Use Permit are shown in the land use regulation tables for each zoning district found in Part 2 (Zoning Districts and Overlay Zones).

B. Land uses eligible for a Master Use Permit or a Tenant Use Permit are described in Section 17.124.100 (Master Use and Tenant Use Permits).

17.124.030 Review Authority

A. The Planning Commission takes action on Conditional Use Permit and Master Use Permit applications.

B. The Community Development Director takes action on Minor Use Permit and Tenant Use Permit applications.

C. The Community Development Director may refer any Minor Use Permit and Tenant Use Permit application to the Planning Commission for review and final decision.

Attachment: Draft Zoning Code Public Review 02.04.2016 (1392 : Zoning Code Update)

17.124.040 Application Submittal and Review

Use Permit applications shall be filed and reviewed in compliance with Chapter 17.112 (Permit Application and Review). The application shall include the information and materials required by the Community Development Department, together with all required application fees. It is the responsibility of the applicant to provide evidence in support of the findings required by Section 17.124.070 (Findings for Approval).

17.124.050 Public Notice and Hearing

A. The Planning Commission shall review and act on a Conditional Use Permit or a Master Use Permit application at a noticed public hearing in compliance with Chapter 17.148 (Public Notice and Hearings).

B. Public notice of a pending action on a Minor Use Permit application shall be provided in compliance with Chapter 17.148 (Public Notice and Hearings). The Community Development Director shall hold a public hearing for a Minor Use Permit application only upon receiving a written request for a public hearing as provided in Section 17.148.030 (Notice of Pending Action).

C. No public hearing is required for a Tenant Use Permit.

17.124.060 Considerations

When evaluating a Conditional Use Permit, Minor Use Permit, or Master Use Permit application, the review authority shall consider the following characteristic of the proposed use:

A. Operating characteristics (hours of operation, traffic generation, lighting, noise, odor, dust, and other external impacts).

B. Availability of adequate public services and infrastructure.

C. Potential impacts to the natural environment.

D. Physical suitability of the subject site for the proposed use in terms of design, location, operating characteristics, shape, size, topography.

17.124.070 Findings for Approval

To approve a Conditional Use Permit, Minor Use Permit, or Master Use Permit, the review authority shall make all of the following findings:

A. The proposed use is allowed in the applicable zoning district.

B. The proposed use is consistent with the General Plan, Local Coastal Program, Zoning Code, and any applicable specific plan or area plan adopted by the City Council.

C. The location, size, design, and operating characteristics of the proposed use will be compatible with the existing and planned land uses in the vicinity of the property.

Attachment: Draft Zoning Code Public Review 02.04.2016 (1392 : Zoning Code Update)

D. The proposed use will not be detrimental to the public health, safety, and welfare.

E. The proposed use is properly located within the city and adequately served by existing or planned services and infrastructure.

17.124.080 Conditions of Approval

The Planning Commission or Community Development Director may attach conditions of approval to a use permit to achieve consistency with the General Plan, Local Coastal Program, Zoning Code, and any applicable specific plan or area plan adopted by the City Council.

17.124.090 Appeals and Post-Decision Procedures

A. Planning Commission decisions on Conditional Use Permits may be appealed to the City Council as described in Chapter 17.152 (Appeals).

B. Community Development Director decisions on Minor Use Permits or Tenant Use Permits may be appealed to the Planning Commission as described in Chapter 17.152 (Appeals).

C. Post-decision procedures and requirements in Chapter 17.156 (Post-Decision Procedures) apply to Use Permits.

17.124.100 Master Use and Tenant Use Permits

A. Purpose. A Master Use Permit is a type of Conditional Use Permit that identifies permitted land uses within a commercial property occupied by multiple tenants. Tenant Use Permits are issued by the Community Development Director for individual tenants that comply with a Master Use Permit.

B. Master Use Permit Eligibility. To be eligible for a Master Use Permit, a property must:

1. Contain more than 10,000 square feet of floor area on a single parcel or on multiple adjoining parcels under one ownership;
2. Conform to all applicable parking and landscaping requirements; and
3. Contain leasable space for two or more tenants.

C. Permitting Process and Restrictions. The process to review and approve a Master Use Permit is the same as for a Conditional Use Permit, except as follows:

1. When approving a Master Use Permit, the Planning Commission shall specify the uses allowed on the property. Allowed uses are limited to uses permitted or conditionally permitted in the applicable zoning district.
2. The Planning Commission may establish a maximum size for an individual tenant and/or use.

Attachment: Draft Zoning Code Public Review 02.04.2016 (1392 : Zoning Code Update)

3. A change of tenant larger than 12,000 square feet in a property with a Master Use Permit requires Planning Commission approval of an amendment to the existing Master Use Permit. A change in tenant larger than 12,000 square feet may not be approved with a Tenant Use Permit.

4. The Planning Commission may deny a Master Use Permit upon finding that particular circumstances of the property, including an existing or proposed use, require a standard Conditional Use Permit process to protect the public health, safety, and welfare.

D. Tenant Use Permits.

1. A land use proposed within a property subject to a Master Use Permit may be established with a Tenant Use Permit, except for tenants 12,000 square or more as described in paragraph 3 above.

2. Tenant Use Permits are approved by the Community Development Director. The Director shall approve a Tenant Use Permit if the proposed use is consistent with the conditions of the Master Use Permit and the requirements of this section.

E. Tenant Notification. Prior to leasing space on a property with a Master Use Permit, the permit holder shall inform the prospective tenant of the conditions of approval attached to the Master Use Permit and the requirements of this section.

Attachment: Draft Zoning Code Public Review 02.04.2016 (1392 : Zoning Code Update)

Chapter 17.128 – VARIANCES

Sections:

17.128.010 Purpose
17.128.020 When Allowed
17.128.030 Review Authority
17.128.040 Application Submittal and Review
17.128.050 Public Notice and Hearing
17.128.060 Findings for Approval
17.128.070 Conditions of Approval
17.128.080 Precedent
17.128.090 Appeals and Post-Decision Procedures

17.128.010 Purpose

This chapter identifies the process to obtain a Variance. A Variance is a discretionary permit that allows for deviation from physical development standards in the Zoning Code. The City may grant a Variance only when the strict application of development standards creates a unique hardship due to unusual circumstances associated with the property.

17.128.020 When Allowed

A. Allowable Variances. The City may grant a Variance to allow for deviation from any physical development standard that applies to the subject property. Examples of physical development standards include height, setbacks, open space, floor area ratio (FAR), and off-street parking requirements.

B. Variances Not Allowed. A Variance may not be granted to:

1. Permit a use other than a use permitted in the zoning district a specified in Part 2 (Zoning Districts and Overlay Zones).
2. Reduce the minimum lot size for single-family dwellings or minimum site area per dwelling unit requirements for multi-family developments.
3. Reduce the protection of an environmentally sensitive habitat area except as specifically provided in Chapter 17.64 (Environmentally Sensitive Habitat Areas).
4. Allow deviation from a requirement of the General Plan.

17.128.030 Review Authority

The Planning Commission takes action on all Variance applications.

17.128.040 Application Submittal and Review

An application for a Variance shall be filed and reviewed in compliance with Chapter 17.112 (Permit Application and Review). The application shall include the information and

Attachment: Draft Zoning Code Public Review 02.04.2016 (1392 : Zoning Code Update)

materials required by the Community Development Department for Variance applications, together with all required application fees. It is the responsibility of the applicant to provide evidence in support of the findings required by Section 17.128.060 (Findings for Approval).

17.128.050 Public Notice and Hearing

The Planning Commission shall review and act on a Variance application at a noticed public hearing in compliance with Chapter 17.148 (Public Notice and Hearings).

17.128.060 Findings for Approval

Note: The findings for approval of a Variance in this section are different from current findings in Section 17.66.090 of the existing Zoning Code.

To approve a Variance application, the Planning Commission shall make all of the following findings:

A. There are unique circumstances applicable to the subject property, including size, shape, topography, location, or surroundings, that do not generally apply to other properties in the vicinity or in the same zone as the subject property.

B. The strict application of the Zoning Code requirements would deprive the subject property of privileges enjoyed by other property in the vicinity or in the same zone as the subject property.

C. The Variance is necessary to preserve a substantial property right possessed by other property in the vicinity or in the same zone as the subject property.

D. The Variance will not be materially detrimental to the public health, safety, or welfare, or be injurious to the property or improvements in the vicinity or in the same zone as the subject property.

E. The Variance does not constitute a grant of special privilege inconsistent with the limitations upon other properties in the vicinity or in the same zone as the subject property.

17.128.070 Conditions of Approval

The Planning Commission may attach conditions of approval to a Variance to achieve consistency with the General Plan, Local Coastal Program, Zoning Code, and any applicable specific plan or area plan adopted by the City Council.

17.128.080 Precedent

The approval of a Variance shall not set the precedent for the granting of any future Variance. Each application shall be considered only on its individual merits.

17.128.090 Appeals and Post-Decision Procedures

A. Planning Commission decisions on Variances may be appealed to the City Council as described in Chapter 17.152 (Appeals).

B. Post-decision procedures and requirements in Chapter 17.156 (Post-Decision Procedures) shall apply to Variances.

Attachment: Draft Zoning Code Public Review 02.04.2016 (1392 : Zoning Code Update)

Chapter 17.132 - SIGN PERMITS

Sections:

17.132.010 Purpose
17.132.020 Types of Sign Permits
17.132.030 When Required
17.132.040 Review Authority
17.132.050 Application Submittal and Review
17.132.060 Public Notice and Hearing
17.132.070 Findings for Approval
17.132.080 Conditions of Approval
17.132.090 Post-Decision Procedures

17.132.010 Purpose

This chapter establishes the process for obtaining a Sign Permit. A Sign Permit is a discretionary action that enables the City to ensure that a proposed sign is consistent with all General Plan goals and policies and will not create negative impacts to adjacent properties or the general public.

17.132.020 Types of Sign Permits

The Zoning Code establishes two types of Sign Permits: Sign Permits reviewed and approved by the Planning Commission and Administrative Sign Permits reviewed and approved by the Community Development Director.

17.132.030 When Required

A Sign Permit is required for types of signs identified in Chapter 17.80.030 (Permit Requirements).

17.132.040 Review Authority

A. The Planning Commission takes action on all Sign Permit applications.

B. The Community Development Direction takes action on all Administrative Sign Permit applications.

17.132.050 Application Submittal and Review

An application for a Sign Permit shall be filed and reviewed in compliance with Chapter 17.112 (Permit Application and Review). The application shall include the information and materials required by the Community Development Department together with all required application fees. It is the responsibility of the applicant to provide evidence in support of the findings required by Section 17.132.060 (Findings for Approval).

Attachment: Draft Zoning Code Public Review 02.04.2016 (1392 : Zoning Code Update)

17.132.060 Public Notice and Hearing

A. The Planning Commission shall review and act on a Sign Permit at a noticed public hearing in compliance with Chapter 17.148 (Public Notice and Hearings).

B. No public hearing is required for an Administrative Sign Permit.

17.132.070 Findings for Approval

Note: The findings for approval of a sign permit in this section are new and replace standards of review for sign applications in Section 17.57.015 of the existing Zoning Code.

The reviewing authority may approve a Sign Permit if all of the following findings can be made:

A. The proposed signs are consistent with the General Plan, Local Coastal Program, Zoning Code, and any applicable specific plan or area plan adopted by the City Council.

B. The proposed signs comply with all applicable standards in Chapter 17.80 (Signs).

C. The proposed sign will not adversely impact the public health, safety, or general welfare.

D. The number, size, placement, design, and material of the proposed signs are compatible with the architectural design of buildings on the site.

E. If the property is located within or near a residential area, the proposed signs are harmonious with the character of the residential neighborhood.

F. The proposed signs are restrained in character and no larger than necessary for adequate identification.

17.132.080 Conditions of Approval

The review authority may attach conditions of approval to a Sign Permit to achieve consistency with the General Plan, Local Coastal Program, Zoning Code, and any applicable specific plan or area plan adopted by the City Council.

17.132.090 Post-Decision Procedures

A. Planning Commission decisions on Sign Permits may be appealed to the City Council as described in Chapter 17.152 (Appeals).

B. Community Development Director decisions on Administrative Sign Permits may be appealed to the Planning Commission as described in Chapter 17.152 (Appeals).

C. Post-decision procedures and requirements in Chapter 17.156 (Post-Decision Procedures) apply to Sign Permits.

Attachment: Draft Zoning Code Public Review 02.04.2016 (1392 : Zoning Code Update)

Chapter 17.136 – MINOR MODIFICATIONS

Sections:

17.136.010 Purpose
17.136.020 When Allowed
17.136.030 Review Authority
17.136.040 Application Submittal and Review
17.136.050 Public Notice and Hearing
17.136.060 Findings for Approval
17.136.070 Conditions of Approval
17.136.080 Appeals and Post-Decision Procedures

Note: The Minor Modification is a new type of approval not in the existing Zoning Code.

17.136.010 Purpose

This chapter establishes the process to obtain a Minor Modification. A Minor Modification allows for small deviations from development standards to accommodate projects which meet the needs of property owners, are consistent with the purpose of the Zoning Code and General Plan, and do not negatively impact neighboring properties or the community at large.

17.136.020 When Allowed

A. **Permitted Modifications.** The City may approve a Minor Modification to allow for a maximum 10 percent deviation from a physical development standard that applies to the subject property. Types of physical development standards eligible for a Minor Modification include:

1. Maximum height of buildings, fences, walls, and other structures;
2. Minimum and maximum setbacks from property lines;
3. Minimum required on-site open space and landscaping;
4. Dimensional standards for parking spaces, driveways, parking lots, and loading areas; and
5. Other similar dimensional standards as determined by the Community Development Director.

B. **Excluded Modifications**. The City may not approve Minor Modifications for:

1. Lot area, width, or depth;
2. Minimum number of off-street parking spaces;
3. Maximum residential density; or

4. Maximum floor area ratio (FAR). .

17.136.030 Review Authority

The Planning Commission takes action on Minor Modifications applications.

17.136.040 Application Submittal and Review

An application for a Minor Modification shall be filed and reviewed in compliance with Chapter 17.112 (Permit Application and Review). The application shall include the information and materials required by the Community Development Department for Minor Modification applications, together with all required application fees. It is the responsibility of the applicant to provide evidence in support of the findings required by Section 17.136.060 (Findings for Approval).

17.136.050 Public Notice and Hearing

The Planning Commission shall review and act on a Minor Modification application at a noticed public hearing in compliance with Chapter 17.148 (Public Notice and Hearings).

17.136.060 Findings for Approval

To approve a Minor Modification application, the Planning Commission shall make all of the following findings:

A. The modification will be compatible with adjacent structures and uses and is consistent with the character of the neighborhood or district where it is located.

B. The modification will not adversely impact neighboring properties or the community at large.

C. The modification is necessary due to unique characteristics of the subject property, structure, or use.

D. The modification will be consistent with the purpose of the zoning district, the General Plan, Local Coastal Program, and any adopted area or neighborhood plan.

E. The modification is consistent with the General Plan, Local Coastal Program, and any applicable specific plan or area plan adopted by the City Council.

F. The modification will not establish an undesirable precedent.

17.136.070 Conditions of Approval

The Planning Commission may attach conditions of approval to a Minor Modification to achieve consistency with the General Plan, Local Coastal Program, Zoning Code, and any applicable specific plan or area plan adopted by the City Council.

Attachment: Draft Zoning Code Public Review 02.04.2016 (1392 : Zoning Code Update)

17.136.080 Appeals and Post-Decision Procedures

A. Planning Commission decisions on Minor Modifications may be appealed to the City Council as described in Chapter 17.152 (Appeals).

B. Post-decision procedures and requirements in Chapter 17.156 (Post-Decision Procedures) apply to Minor Modifications.

Attachment: Draft Zoning Code Public Review 02.04.2016 (1392 : Zoning Code Update)

Chapter 17.140 – REASONABLE ACCOMMODATIONS

Sections:

17.140.010 Purpose
17.140.020 When Allowed
17.140.030 Review Authority
17.140.040 Public Notice of Process Availability
17.140.050 Application Requirements
17.140.060 Review Procedure
17.140.070 Criteria for Decision
17.140.080 Conditions of Approval
17.140.090 Appeals and Post-Decision Procedures

Note: This chapter is new and required by federal and State law.

17.140.010 Purpose

This chapter establishes a procedure for requesting reasonable accommodation for persons with disabilities seeking equal access to housing under the Federal Fair Housing Act and the California Fair Employment and Housing Act. A reasonable accommodation is typically an adjustment to physical design standards to accommodate the placement of wheelchair ramps or other exterior modifications to a dwelling in response to the needs of a disable resident.

17.140.020 When Allowed

A. Eligible Applicants. A request for reasonable accommodation may be made by any person with a disability, their representative, or any entity, when the application of the Zoning Code or other land use regulations, policy, or practice acts as a barrier to fair housing opportunities.

B. Definition. A person with a disability is a person who has a physical or mental impairment that limits or substantially limits one or more major life activities, anyone who is regarded as having this type of impairment, or anyone who has a record of this type of impairment.

C. Eligible Request. A request for reasonable accommodation may include a modification or exception to the rules, standards, and practices for the siting, development, and use of housing or housing-related facilities that would eliminate regulatory barriers and provide a person with a disability equal opportunity to housing of their choice.

17.140.030 Review Authority

A. Community Development Director. The Community Development Director shall take action on reasonable accommodation applications if the application is not filed for

Attachment: Draft Zoning Code Public Review 02.04.2016 (1392 : Zoning Code Update)

concurrent review with an application for discretionary review by the Planning Commission or City Council.

B. Other Review Authority. If a reasonable accommodation application is submitted concurrently with a permit application reviewed by the Planning Commission or City Council, the reasonable accommodation application shall be reviewed by the Planning Commission or City Council.

C. Referral to Planning Commission. The Community Development Director may refer any reasonable accommodation application to the Planning Commission for review and final decision.

17.140.040 Public Notice of Process Availability

Notice of the availability of the reasonable accommodation process shall be publicly displayed at City Hall. Forms for requesting reasonable accommodation shall be available to the public at the Community Development Department at City Hall.

17.140.050 Application Requirements

A. Application. A request for reasonable accommodation shall be submitted on an application form provided by the Community Development Department along with any fees required by the Planning Fee Schedule.

B. Review with Other Land Use Applications. If the project for which the request for reasonable accommodation is being made also requires some other discretionary approval (e.g., Conditional Use Permit, Design Review), then the applicant shall file the reasonable accommodation application materials together for concurrent review with the application for discretionary approval.

C. Application Timing. A request for reasonable accommodation may be filed at any time that the accommodation is necessary to ensure equal access to housing. A reasonable accommodation does not affect an individual's obligation to comply with other applicable regulations not at issue in the requested accommodation.

D. Application Assistance. If an individual needs assistance in making the request for reasonable accommodation, the City will provide assistance to ensure that the process is accessible to the individual.

17.140.060 Review Procedure

A. Director Review.

1. The Community Development Director shall make a written determination within 45 days and either grant, grant with modifications, or deny a request for reasonable accommodation.

2. If necessary to reach a determination on the request for reasonable accommodation, the Community Development Director may request further

Attachment: Draft Zoning Code Public Review 02.04.2016 (1392 : Zoning Code Update)

information from the applicant consistent with fair housing laws. In the event that a request for additional information is made, the forty-five-day period to issue a decision is stayed until the applicant submits the requested information.

B. Other Review Authority. The determination on whether to grant or deny the request for reasonable accommodation submitted concurrently with a discretionary permit application shall be made by the Planning Commission or City Council in compliance with the review procedure for the discretionary review.

17.140.070 Criteria for Decision

The review authority shall make a written decision and either approve, approve with modifications, or deny a request for reasonable accommodation based on consideration of all of the following factors:

A. Whether the housing which is the subject of the request will be used by an individual defined as disabled under the Americans with Disabilities Act.

B. Whether the request for reasonable accommodation is necessary to make specific housing available to an individual with a disability under the Americans with Disabilities Act.

C. Whether the requested reasonable accommodation would impose an undue financial or administrative burden on the City.

D. Whether the requested reasonable accommodation would require a fundamental alteration in the nature of a City program or law, including but not limited to land use and zoning.

E. Potential impacts on surrounding uses.

F. Physical attributes of the property and structures.

G. Other reasonable accommodations that may provide an equivalent level of benefit.

17.140.080 Conditions of Approval

In approving a request for reasonable accommodation, the review authority may impose conditions of approval to ensure that the reasonable accommodation will comply with the criteria required by Section 17.140.070 (Criteria for Decision).

17.140.090 Appeals and Post-Decision Procedures

A. Appeals. Reasonable accommodation decisions may be appealed consistent with Chapter 17.152 (Appeals). If an applicant needs assistance in filing an appeal on an adverse decision, the City will provide assistance to ensure that the appeals process is accessible.

Attachment: Draft Zoning Code Public Review 02.04.2016 (1392 : Zoning Code Update)

B. Other Post-Decision Procedures. Post-decision procedures and requirements in Chapter 17.156 (Post-Decision Procedures) apply to reasonable accommodation decisions.

Attachment: Draft Zoning Code Public Review 02.04.2016 (1392 : Zoning Code Update)

Chapter 17.144 - ZONING CODE AMENDMENTS

Sections:

17.144.010 Purpose
17.144.020 Initiation
17.144.030 Application
17.144.040 Planning Commission Hearing and Action
17.144.050 City Council Hearing and Action
17.144.060 Findings for Approval
17.144.070 Effective Dates

Note: This chapter revises Zoning Code amendment provisions in Chapter 17.69 of the existing Zoning Code to comply with State law and reflect administrative procedures in other chapters of the updated Zoning Code.

17.144.010 Purpose

This chapter establishes procedures for amending the Zoning Code and Zoning Map. All amendments to the Zoning Code shall be processed as set forth in Government Code Section 65853 et seq. and as specified in this chapter.

17.144.020 Initiation

A. Zoning Map Amendment. A request for an amendment to the Zoning Map may be initiated by:

1. The City Council;
2. The Planning Commission;
3. The Community Development Director; or
4. One or more owners of the property for which the amendment is sought.

B. Zoning Code Text Amendment. A request for an amendment to the text of the Zoning Code may be initiated by the following:

1. The City Council;
2. The Planning Commission;
3. The Community Development Director; or
4. Any resident, property owner, or business owner in the city.

17.144.030 Application

An application for a Zoning Code Amendment shall be filed and reviewed in compliance with Chapter 17.112 (Permit Application and Review). The application shall include the

Attachment: Draft Zoning Code Public Review 02.04.2016 (1392 : Zoning Code Update)

information and materials required by the Community Development Department, together with all required application fees. For amendments submitted by a resident, property owner, or business owner, it is the responsibility of the applicant to provide evidence in support of the findings required by Section 17.144.060 (Findings for Approval).

17.144.040 Planning Commission Hearing and Action

A. General. The Planning Commission shall hold a public hearing on a proposed Zoning Map Amendment and Zoning Code Amendment in compliance with Chapter 17.148 (Public Notice and Hearings).

B. Recommendation of Approval. The Planning Commission may recommend to the City Council the approval or conditional approval of the proposed Zoning Map Amendment or Zoning Code Amendment, based upon the findings specified in Section 17.144.060 (Findings for Approval). The Planning Commission shall forward a written recommendation, and the reasons for the recommendation, to the City Council within 90 days after the date the hearing was closed to the public. A recommendation for approval shall be made by a majority vote of the total membership of the Planning Commission.

C. Denial. The Planning Commission may deny the proposed Zoning Code Amendment based upon the findings specified in Section 17.144.060 (Findings for Approval). For a Zoning Map Amendment, if the action of the Planning Commission is to recommend denial, the City Council is not required to take further action on the proposed amendment unless an interested party requests a hearing in writing with the City Clerk within ten days after the Planning Commission recommendation is filed with the City Council.

17.144.050 City Council Hearing and Action

A. General. After receipt of the Planning Commission's recommendation to approve a proposed Zoning Code Amendment or Zoning Map Amendment, the City Council shall hold a public hearing on the proposal in compliance with Chapter 17.148 (Public Notice and Hearings).

B. Approval or Denial. The City Council may approve, conditionally approve, or deny the proposed Zoning Code Amendment or Zoning Map Amendment based upon the findings specified in Section 17.144.060 (Findings for Approval).

C. Finality of Action. The action by the City Council shall be made by a majority vote of the total membership of the City Council and shall be final and conclusive except for amendments within the coastal appeal zone, in which case the City Council's decision may be appealed to the Coastal Commission.

D. Referral to Planning Commission. If the City Council proposes to adopt a substantial modification to the Zoning Code Amendment not previously considered by

Attachment: Draft Zoning Code Public Review 02.04.2016 (1392 : Zoning Code Update)

the Planning Commission, the proposed modification shall be first referred to the Planning Commission for its recommendation.

E. Failure to Report. The failure of the Planning Commission to report back to the City Council within 40 days after the reference, or within the time set by the City Council, shall be deemed a recommendation of approval.

17.144.060 Findings for Approval

The City Council may approve a Zoning Code Amendment or Zoning Map Amendment only if all of the following findings are made:

A. Findings for all Zoning Code and Zoning Map Amendments.

1. The proposed amendment is consistent with the General Plan and any applicable specific plan as provided by Government Code Section 65860.
2. The proposed amendment will not be detrimental to the public interest, health, safety, convenience, or welfare of the City.

B. Additional Finding for Zoning Code Text Amendments. The proposed amendment is internally consistent with other applicable provisions of the Zoning Code.

C. Additional Finding for Zoning Map Amendments. The affected site is physically suitable in terms of design, location, shape, size, and other characteristics to ensure that the permitted land uses and development will comply with the Zoning Code and General Plan and contribute to the health, safety, and welfare of the property, surrounding properties, and the community at large.

17.144.070 Effective Dates

A Zoning Code Amendment becomes effective 30 days following the adoption of the ordinance by the City Council.

Attachment: Draft Zoning Code Public Review 02.04.2016 (1392 : Zoning Code Update)

Chapter 17.148 – PUBLIC NOTICE AND HEARINGS

Sections:

17.148.010 Purpose
17.148.020 Notice of Hearing
17.148.030 Notice of Pending Action
17.148.040 Scheduling of Hearing
17.148.050 Hearing Procedure
17.148.060 Recommendations
17.148.070 Decision and Notice

17.148.010 Purpose

This chapter establishes procedures for public notices and hearings required by the Zoning Code.

17.148.020 Notice of Hearing

When the Zoning Code requires a noticed public hearing, the City shall provide notice of the hearing as required by this section.

A. Content of Notice. Notice of a public hearing shall include all of the following information, as applicable.

1. **Hearing Information.** The date, time, and place of the hearing; the name of the hearing body; and the phone number, email address, and street address of the Community Development Department where an interested person could call or visit to obtain additional information.

2. **Project Information.** The name of the applicant, the City's file number assigned to the application, a general explanation of the matter to be considered, a general description of the location of the subject property, and any recommendation from a prior hearing body.

3. **Statement on Environmental Document.** A statement that the proposed project is determined to be exempt from the California Environmental Quality Act (CEQA), or that a Negative Declaration, Mitigated Negative Declaration, or Environmental Impact Report has been prepared for the project. The hearing notice shall state that the hearing body will consider approval of the CEQA determination or document prepared for the proposed project.

4. **Zoning Map Amendments.** Public notices posted for proposed Zoning Map Amendments shall consist of the words "Notice of Proposed Change of Zone" printed in plain type with letters not less than 1½ inches in height.

Attachment: Draft Zoning Code Public Review 02.04.2016 (1392 : Zoning Code Update)

B. Method of Notice Distribution. Notice of a public hearing required by the Zoning Code shall be given at least 10 calendar days before the hearing date in compliance with Sections 1 through 5 below and as summarized in Table 17.148-1.

TABLE 17.148-1: METHOD OF NOTICE DISTRIBUTION

	Zoning Code Amendment when no uses or intensities affected	**Zoning Code Amendment when uses or intensities affected**	**Design Permits, Use Permits, Minor Modifications, Variances, Coastal Permits**
1. Newspaper notice	Yes	Yes	No
2. Mailing to site owner	No	Yes	Yes
3. Mailing to adjacent owners within 300 feet	No	Yes	Yes
4. Alternative to mailing if owner or adjacent property list is over 1,000: 1/8 page newspaper notice	No	Yes	Yes
5. Newspaper or posted notice	No	Yes	Yes

1. **Newspaper Publication.** For Zoning Code Amendments, notice of public hearing shall be published in at least one newspaper of general circulation at least 10 days before the hearing.

2. **Mailing.** Where required by Table 17.148-1, notice shall be mailed at least ten days before the scheduled hearing to the following recipients:

   a. **Project Site Owners and the Applicant.** The owners of the subject property or the owner's authorized agent, and the applicant.

   b. **Adjacent Property Owners.** The owners of the real property located within a radius of 300 feet from the exterior boundaries of the subject property.

   c. **Local Agencies.** Each local agency expected to provide roads, schools, sewerage, streets, water, or other essential facilities or services to the subject property, whose ability to provide those facilities and services may be significantly affected.

   d. **Persons Requesting Notice.** Any person who has filed a written request for notice with the Community Development Department.

   e. **Other Persons.** Any other person, whose property, in the judgment of the Community Development Department, might be affected by the proposed project.

3. **Alternative to Mailing.** If the number of property owners to whom notice would be mailed in compliance with Subsection 2 above is more than 1,000, the Community Development Department may choose to provide notice by placing a display advertisement of at least one-eighth page in one or more local newspapers of general circulation at least ten days prior to the hearing.

4. **Publication and Posting.** If notice is mailed or delivered as described in Subsection 2, above, the notice shall also either be:

   a. Published at least once in a newspaper of general circulation in Capitola at least ten days before the scheduled hearing; or

   b. Posted at least ten days before the scheduled hearing in at least three public places within Capitola, including one public place in the area affected by the proceeding.

5. **Additional Notice.** In addition to the types of notice required above, the Community Development Department may provide additional notice as determined necessary or desirable.

6. **Failure to Receive Notice.** The validity of the hearing shall not be affected by the failure of any resident, property owner, or community member to receive a mailed notice.

17.148.030 Notice of Pending Action

Note: The public notice of a pending action procedure in this section is new.

A. For Minor Use Permit, and Administrative Design Review applications, public notice of a pending action shall be mailed to the owners of the real property located within a radius of 300 feet from the exterior boundaries of the subject property.

B. In addition to information required by Section 17.148.020.A, the notice of a pending action shall state that the City is considering the application and that the Community Development Director will hold a public hearing for the application only upon receiving by a specified date written request for a hearing.

C. If the City receives a request for a public hearing by the specified date, the Community Development Director shall hold a noticed public hearing on the application consistent with this chapter.

D. If no request for a public hearing is received by the specified date, the Community Development Director shall act on the application without a public hearing.

17.148.040 Scheduling of Hearing

After the completion of any environmental document required by the California Environmental Quality Act (CEQA), and a Community Development Department staff report, a matter requiring a public hearing shall be scheduled on the next available agenda

reserved for public hearings, but no sooner than any minimum time period established by State law.

17.148.050 Hearing Procedure

A. General. Hearings shall be conducted in a manner consistent with the procedures adopted or endorsed by the hearing body.

B. Time and Place of Hearing. A hearing shall be held at the date, time, and place for which notice was given, unless the required quorum of hearing body members is not present.

C. Continued Hearing. Any hearing may be continued from time to time without further notice, provided that the chair of the hearing body announces the date, time, and place to which the hearing will be continued before the adjournment or recess of the hearing.

D. Motion of Intent. The hearing body may announce a tentative decision, and defer action on a final decision until appropriate findings and conditions of approval have been prepared.

17.148.060 Recommendations

After a public hearing resulting in a recommendation to another hearing body, the recommendation shall be forwarded to the other hearing body. A copy of the staff report to other hearing body with the recommendation shall be provided to applicant.

17.148.070 Decision and Notice

A. Date of Action. With the exception of appeals to the City Council, the hearing body shall take action on the matter being considered following the close of the public hearing. The hearing body shall also take action on projects within the following timeframe as required by the California Environment Quality Act (CEQA):

1. Within 60 days of the date a Negative Declaration or Mitigated Negative Declaration has been adopted for project approval, the City shall take action on the accompanying discretionary project.
2. Within 180 days from the date the decision-making authority certifies a final Environmental Impact Report (EIR), the City shall take action on the accompanying discretionary project.

B. Decision.

1. The hearing body may announce and record its decision on the matter being considered at the conclusion of a scheduled hearing, or make a motion of intent and continue the matter to a later meeting agenda.

Attachment: Draft Zoning Code Public Review 02.04.2016 (1392 : Zoning Code Update)

2. At the conclusion of a hearing conducted by the Community Development Director, the Community Development Director may choose to refer the matter to the Planning Commission for review and final decision. Referral to the Planning Commission may be chosen in cases of unusual public sensitivity, controversy, or complexity relating to the requested approval.

C. Notice of Decision.

1. Following a final decision, the Community Development Department shall provide notice of the final action to the applicant and to any person who specifically requested notice of the final action.

2. Notice of a final action shall contain applicable findings, conditions of approval, reporting and monitoring requirements, and the procedure for appeal of the decision.

Attachment: Draft Zoning Code Public Review 02.04.2016 (1392 : Zoning Code Update)

Chapter 17.152 – APPEALS

Sections:

17.152.010 Purpose
17.152.020 Appeal Subjects and Jurisdiction
17.152.030 Filing and Processing of Appeals
17.152.040 Judicial Review

17.152.010 Purpose

This chapter establishes procedures for the appeal and call for review of actions and decisions made by the Planning Commission and the Community Development Director. This chapter supplements general procedures for appeals to the City Council in Municipal Code Chapter 2.52 (Appeals to the City Council). In the case of any conflict between this chapter and Chapter 2.52, this chapter governs.

17.152.020 Appeal Subjects and Jurisdiction

A. Community Development Director Decisions. Any decision of the Community Development Director may be appealed to the Planning Commission.

B. Planning Commission Decisions. Any decision of the Planning Commission may be appealed to the City Council.

C. Coastal Permits. Appeal procedures for Coastal Permits shall be as specified in Chapter 17.44.140 (Appeals).

17.152.030 Filing and Processing of Appeals

A. Eligibility. Any person may submit an appeal of a decision by the Community Development Director and the Planning Commission.

B. Timing of Appeal. An appeal shall be filed within ten calendar days following the date the decision was rendered, unless a longer appeal period is specified as part of the project approval. In the event the completion of the appeal period falls on a weekend or holiday, the decision shall become effective after 5:00 pm on the first business day following the completion of the appeal period.

C. Form of Appeal.

1. An appeal shall be submitted in writing on an official City application form together with all required application fees.
2. The appeal application shall state the pertinent facts and the basis for the appeal.
3. The whole decision or part of the decision may be appealed. If an appellant chooses, an appeal may be taken solely from any finding, action, or condition.

Attachment: Draft Zoning Code Public Review 02.04.2016 (1392 : Zoning Code Update)

D. Effect of Appeal. Once an appeal is filed, any action on the associated project is suspended until the appeal is processed and a final decision is rendered by the review authority.

E. Report and Scheduling of Hearing.

1. When an appeal has been filed, the Community Development Department shall prepare a report on the matter, including all of the application materials in question, and schedule the matter for a public hearing by the appropriate review authority within 90 days of receiving the appeal.
2. Notice of the hearing shall be provided and the hearing shall be conducted in compliance with Chapter 17.148 (Public Notice and Hearings).
3. Any interested person may appear and be heard regarding the appeal.
4. All appeals on a single project shall be considered together at the same hearing.

F. Hearing and Decision.

1. During the appeal hearing, the review authority may take action on any aspect of the appealed project (de novo review). The review authority shall make its own decision supported by findings.
2. The review authority's decision may:
   a. Affirm, affirm in part, or reverse the action that is the subject of the appeal;
   b. Adopt additional conditions of approval that address the matter appealed; or
   c. Remand the appeal for further review, recommendation, or action to the previous review authority.
3. The review authority's action shall be based upon findings of fact about the particular case. The findings shall identify the reasons for the action on the appeal and verify the compliance of the subject of the appeal with the Zoning Code.
4. A matter being heard on appeal may be continued for good cause (e.g. additional California Environmental Quality Act (CEQA) review is required).
5. If the hearing body is unable to reach a decision on the matter appealed, the appeal and the decision of the previous review authority shall remain in effect.

G. Effective Date of Appeal Decision.

1. **City Council's Decision.** A decision of the City Council on an appeal is final and shall be effective on the date the decision is rendered.
2. **Other Decisions.** A decision of the Planning Commission is final and effective after 5:00 p.m. on the tenth calendar day following the date the decision is rendered, when no appeal to the decision or call for review has been filed in compliance with this chapter. In the event the completion of the appeal period

Attachment: Draft Zoning Code Public Review 02.04.2016 (1392 : Zoning Code Update)

falls on a weekend or holiday, the decision shall become effective after 5:00 pm on the first business day following the completion of the appeal period.

17.152.040 Judicial Review

No person may seek judicial review of a City decision on a permit or other matter in compliance with the Zoning Code until all appeals to the Planning Commission and City Council have been first exhausted in compliance with this chapter.

Attachment: Draft Zoning Code Public Review 02.04.2016 (1392 : Zoning Code Update)

Chapter 17.156 – POST-DECISION PROCEDURES

Sections:

17.156.010 Purpose
17.156.020 Issuance of Permits
17.156.030 City Council Decisions
17.156.040 Effective Date of Decision
17.156.050 Conformance to Approved Plans
17.156.060 Performance Guarantees
17.156.070 Changes to an Approved Project
17.156.080 Time Limits and Extensions
17.156.090 Resubmittals
17.156.100 Permits to Run with the Land
17.156.110 Permit Revocation

17.156.010 Purpose

This chapter establishes procedures and requirements that apply following a City decision on a permit required by the Zoning Code.

17.156.020 Issuance of Permits

Permits shall not be issued until the effective date, provided that no appeal of the review authority's decision has been filed in compliance with Chapter 17.152 (Appeals).

17.156.030 City Council Decisions

All decisions of the City Council on appeals, legislative actions, and other matters are final and conclusive except for decisions which may be appealed to the Coastal Commission.

17.156.040 Effective Date of Decision

Note: Subsection A below adds new language clarifying the effective date of City Council decisions within the Coastal Zone.

A. City Council Decisions.

1. A decision of the City Council on a project outside of the Coastal Zone is final and shall be effective on the date the decision is rendered.
2. A decision of the City Council on a project within the Coastal Zone that is not appealable to the Coastal Commission is final and shall be effective on the date the Coastal Commission has receive a Notice of Final Action consistent with Section 17.44.130 (Notice of Final Action).

Attachment: Draft Zoning Code Public Review 02.04.2016 (1392 : Zoning Code Update)

3. A decision of the City Council on a project within the Coastal Zone that is appealable to the Coastal Commission is final and shall be effective after 5:00 p.m. on the tenth day following the date the decision is rendered, when no appeal to the decision has been filed with the Coastal Commission in compliance with Chapter 17.44.140 (Appeals).

B. Other Decisions. The decision of the Community Development Director or Planning Commission is final and effective after 5:00 p.m. on the tenth day following the date the decision is rendered, when no appeal to the decision has been filed in compliance with Chapter 17.152 (Appeals).

17.156.050 Conformance to Approved Plans

A. Compliance. All work performed under an approved permit shall be in compliance with the approved drawings and plans and any conditions of approval imposed by the review authority.

B. Changes. Changes to an approved project shall be submitted and processed in compliance with Section 17.156.070 (Changes to an Approved Project).

17.156.060 Performance Guarantees

Note: This section is new.

A. Security Required. The Community Development Director may require an applicant to provide adequate security to guarantee the proper completion of any approved work or compliance with any conditions of approval.

B. Form of Security. The security shall be in the form of cash, a certified or cashier's check, or a performance bond executed by the applicant and a corporate surety authorized to do business in California and approved by the City.

C. Amount of Security. The Community Development Director shall determine the amount of the security necessary to ensure proper completion of the approved work or compliance with any conditions of approval.

D. Duration of Security. The security shall remain in effect until all work has been completed and conditions fulfilled to the satisfaction of the Community Development Director or until a specified warranty period has elapsed.

E. Release of Security. The security deposit shall be released upon completion of the approved work or compliance with any conditions of approval.

F. Failure to Comply.

1. Upon failure to complete any work or comply with conditions, the City may complete the work or fulfill the condition, and may collect from the applicant or surety all costs incurred, including administrative, engineering, legal, and inspection costs.

Attachment: Draft Zoning Code Public Review 02.04.2016 (1392 : Zoning Code Update)

2. Any unused portion of the security shall be refunded to the funding source.

17.156.070 Changes to an Approved Project

Note: Subsection C below establishes new criteria for Community Development Director approval of a minor change to an approved project.

An approved project shall be established only as approved by the review authority, except when changes to the project are approved in compliance with this section.

A. Request for a Change. An applicant shall request desired changes in writing, and shall submit appropriate supporting materials and an explanation for the request.

B. Notice and Hearing. If the original approval required a noticed public hearing, a noticed public hearing is required for the requested change, except as allowed by Subsection C (Minor Changes).

C. Minor Changes. The Community Development Director may authorize minor changes to an approved project if the changes comply with all of the following criteria:

1. The requested changes are consistent with the Zoning Code.
2. The requested changes are consistent with the spirit and intent of the original approval.
3. The requested changes do not involve a feature of the project that was a basis for findings in a Negative Declaration, Mitigated Negative Declaration, or Environmental Impact Report for the project.
4. The requested changes do not involve a feature of the project that was a basis for conditions of approval for the project.
5. The requested changes do not involve a feature of the project that was a specific consideration by the review authority in granting the approval.
6. The requested changes do not involve any expansion, intensification, or increase in size of the land use or structure.
7. The requested changes comply with the criteria above and involve a minor change to the project design that maintains the essential elements of the project as originally approved. Minor changes to a project design include but are not limited to modifications to:
   a. The location, size, or design of a surface parking area if consistent with Chapter 17.76 (Parking and Loading).
   b. The location or design of an accessory structure 80 square feet and 9 feet in height or less.

Attachment: Draft Zoning Code Public Review 02.04.2016 (1392 : Zoning Code Update)

c. The size, placement, or number of doors and windows provided the changes affect fewer than 25 percent of the structure's doors and windows and no new privacy impacts would be created.

d. Materials and colors of affecting less than 25 percent of the building facade provided the changes maintain the approved architectural style of the structure.

e. Fences and walls if consistent with Chapter 17.60 (Fences and Walls).

f. Landscaping if consistent with Chapter 17.72 (Landscaping).

g. Exterior lighting if consistent with Chapter 17.96 (Supplemental Standards).

h. Roof forms and materials provided there is no increase in structure height.

i. Facade articulation such as porch columns, shutters, tile work, and other architectural details. Modifications that fundamentally alter the architectural style of a structure are not considered a minor change.

j. The number, location, and size of decks and patios provide no new noise or privacy impacts would be created.

k. The number, size, type, and location of skylights.

l. Other similar minor changes to project design as determined by the Community Development Director.

17.156.080 Time Limits and Extensions

Note: This section replaces Section 17.81.160 in the existing Zoning Code to clarify procedures and codify current practice.

A. Expiration of Permit.

1. A permit not exercised within two years shall expire and become void, except where an extension of time is approved as allowed by Subsection C (Extension of Time) below.

2. A permit shall expire and become void if the permitted land use is abandoned or discontinued for one year or longer.

B. Exercised Defined. A permit or approval shall be considered exercised when:

1. A building permit is issued and construction has commenced;

2. A certificate of occupancy is issued; or

3. The land use is established.

C. Extension of Time. The Community Development Director may approve extensions to a permit in the following manner:

Attachment: Draft Zoning Code Public Review 02.04.2016 (1392 : Zoning Code Update)

1. Extensions to a permit may be approved by the review authority which originally approved the permit.
2. In instances where the Community Development Director was the approval authority, the Community Development Director may choose to refer any action to extend a permit to the Planning Commission for review and final decision.
3. The review authority may approve up to two two-year extensions (four years total) to a permit. The review authority may also approve an extension up to the expiration date of a valid tentative for projects involving a subdivision of land if such an extension is necessary to prevent a substantial hardship for the project applicant.
4. The applicant shall submit to the Community Development Department a written request for an extension of time no later than ten days before the expiration of the permit.
5. The review authority may extend the permit if the applicant has proceeded in good faith and has exercised due diligence in efforts to exercise the permit in a timely manner.
6. The burden of proof is on the applicant to demonstrate that the permit should be extended.

17.156.090 Resubmittals

A. Resubmittals Prohibited. For a period of twelve months following the denial or revocation of a permit, the City shall not accept an application for the same or substantially similar permit for the same site, unless the denial or revocation was made without prejudice, and so stated in the record.

B. Determination. The Community Development Director shall determine whether the new application is for a permit which is the same or substantially similar to the previously denied or revoked permit.

C. Appeal. The determination of the Community Development Director may be appealed to the Planning Commission, in compliance with Chapter 17.112 (Permit Application and Review).

17.156.100 Permits to Run with the Land

Permits issued in compliance with the Zoning Code remain valid upon change of ownership of the site, structure, or land use that was the subject of the permit application.

Attachment: Draft Zoning Code Public Review 02.04.2016 (1392 : Zoning Code Update)

17.156.110 Permit Revocation

Note: This section establishes a new standard permit revocation procedure that applies to all discretionary permits, replacing revocation procedures for each type of permit in the existing Zoning Code (e.g., 17.60.120 and 17.66.140 in the existing Zoning Code).

Any discretionary permit may be revoked as provided for in this section.

A. Review Authority.

1. A permit may be revoked by the review authority which originally approved the permit.
2. In instances where the Community Development Director was the approval authority, the Community Development Director may choose to refer any action to revoke a permit to the Planning Commission for review and final decision.

B. Property Owner Notification. Prior to initiating proceedings to revoke a permit, the Community Development Director shall notify the property owner of the permit violations, identify necessary corrections, and establish a reasonable period within which the property owner shall correct the violations. If the property owner has not corrected the violation within the specified period of time, the City may proceed with the process to revoke the permit.

C. Public Notice and Hearing. Public notice and hearing for any action to revoke a permit shall be provided in compliance with Chapter 17.148 (Public Notice and Hearings).

D. Findings. The review authority may revoke a permit only if one or more of the following findings can be made:

1. The applicant or property owner has altered the circumstances under which the permit was granted to a degree that one or more of the findings required to grant the original permit can no longer be made.
2. Permit issuance was based on misrepresentation by the applicant, either through the omission of a material statement in the application, or in public hearing testimony.
3. One or more conditions of approval have been violated, or have not been complied with or fulfilled.
4. The use or structure for which the permit was granted no longer exists or has been discontinued for a continuous period of at least twelve months.
5. The applicant or property owner has failed or refused to allow inspections for compliance.
6. Improvements authorized by the permit are in violation of the Zoning Code or any law, ordinance, regulation, or statute.

Attachment: Draft Zoning Code Public Review 02.04.2016 (1392 : Zoning Code Update)

7. The use or structure is being operated or maintained in a manner which constitutes a nuisance.

E. Effect of Revocation. The revocation of a permit shall have the effect of terminating the approval and denying the privileges granted by the permit.

Attachment: Draft Zoning Code Public Review 02.04.2016 (1392 : Zoning Code Update)

PART 5

Glossary

Chapter 17.160 - Glossary…… 160-1

Attachment: Draft Zoning Code Public Review 02.04.2016 (1392 : Zoning Code Update)

Chapter 17.160 - GLOSSARY

Sections:

17.160.010 Purpose
17.160.020 Definitions

17.160.010 Purpose

This chapter provides definitions of terms and phrases used in the Zoning Code that are technical or specialized, or which may not reflect common usage. If any of the definitions in this chapter conflict with others in the Municipal Code, these definitions shall control for only the provisions of this Zoning Code. If a word is not defined in this chapter or in other chapters of the Zoning Code, the Community Development Director shall determine the appropriate definition.

17.160.020 Definitions

A. "A" Terms.

1. **Accessory Structure**. "Accessory structure" means a structure that is incidental and subordinate to a primary structure or use located on the same parcel.
2. **Accessory Use**. "Accessory use" means a land use which is incidental and subordinate to a primary land use located on the same parcel.
3. **Addition**. "Addition" means any development or construction activity that expands the footprint or increases the habitable floor area of a building.
4. **Alcoholic Beverage Sales**. "Alcoholic beverage sales" means the sale of alcoholic beverages for on-site consumption at a restaurant, bar, nightclub or other establishment, or the retail sale of alcoholic beverages for off-site consumption.
5. **Alteration**. See "Modification."
6. **Applicant.** "Applicant" means any person, firm, partnership, association, joint venture, corporation, or an entity or combination of entities which seeks City permits and approvals.
7. **Assumed Ground Surface**. "Assumed ground surface" means a line on each elevation of an exterior wall or vertical surface which connects those points where the perimeter of the structure meets the finished grade.
8. **Average Slope.** "Average slope" means the average slope of a parcel calculated using the formula: S = 100(I)(L)/A, where:
   a. S = Average slope (in percent);
   b. I = Contour interval (in feet);
   c. L = Total length of all contour lines on the parcel (in feet); and

Attachment: Draft Zoning Code Public Review 02.04.2016 (1392 : Zoning Code Update)

d. A = Area of subject parcel (in square feet).

B. "B" Terms.

1. **Banks and Financial Institutions**. "Banks and financial institutions" means a financial institutions providing retail banking services. Includes only those institutions serving walk-in customers or clients, including banks, savings and loan institutions, check-cashing services, and credit unions.

2. **Base Zoning District**. "Base zoning district" means the primary zoning, as distinguished from an overlay zone, that applies to a parcel of land as shown on the Zoning Map.

3. **Basement**. "Basement" means that portion of a building between floor and ceiling, which is partly below and partly above grade, but located so that the vertical distance from grade to the floor below is less than the vertical distance from grade to ceiling.

4. **Block.** "Block" means the property abutting on one side of a street and lying between the two nearest intersecting streets."

5. **Bluff or Cliff**. "Bluff" or "cliff" means the scarp or steep face of rock, decomposed rocks, sediment or soil resulting from erosion, faulting, folding or excavation of land mass and exceeding ten feet in height, and includes what are commonly known as "cliffs."

6. **Building**. "Building" means any structure used or intended for supporting or sheltering any use or occupancy.

7. **Building Coverage**. "Building coverage" means the land area covered by all buildings and accessory structures on a parcel.

8. **Building Face**. "Building face" means and includes the general outer surface of a main exterior wall of a building. For example, a building with a rectangular plan has four main exterior walls and four building faces.

9. **Building Height**. "Building height" means the vertical distance measured form the assumed ground surface of the building to the highest point of the roof, ridge, or parapet wall.

10. **Business Services**. "Business Services" means an establishment that provides services to other businesses on a fee or contract basis. Includes computer rental and repair, catering, printing and duplicating services, outdoor advertising services, package delivery services, equipment rental and leasing, and other similar land uses.

11. **By-Right**. "By-right" means permitted without any form of discretionary approval.

C. "C" Terms.

Attachment: Draft Zoning Code Public Review 02.04.2016 (1392 : Zoning Code Update)

1. **Capitola Village**. "Capitola Village" means the central core of Capitola generally bounded by the Monterey Bay shoreline to the south, the railroad trestle to the north and west, and Cliff Avenue and Depot Hill to the east.
2. **Caretaker Quarters.** "Caretaker quarters" means a residence that is accessory to a nonresidential primary use of the site, where needed for security, or 24-hour care or supervision.
3. **Carport**. "Carport" means an accessory building to a residential structure, open on two, three or four sides and attached to, or detached from, a dwelling and established for the loading or unloading of passengers or the storage of an automobile.
4. **Coastal Zone**. "Coastal zone" means the area of land and water extending from the state's outer seaward limit of jurisdiction inland to the boundary as shown in Capitola's Local Coastal Program (LCP) as certified by the California Coastal Commission.
5. **Colleges and Trade Schools**. "Colleges and trade schools" means institutions of higher education providing curricula of a general, religious or professional nature, typically granting recognized degrees. Includes junior colleges, business and computer schools, management training, vocational education, and technical and trade schools.
6. **Community Assembly**. "Community assembly" means a facility that provides space for public or private meetings or gatherings. Includes places of worship, community centers, meeting space for clubs and other membership organizations, social halls, union halls, banquet centers, and other similar facilities.
7. **Community Benefit.** "Community benefit" means a public amenity offered by a project applicant that advances General Plan goals but is not required by the Zoning Code or any other provision of local, State, or federal law.
8. **Commercial Entertainment and Recreation**. "Commercial entertainment and recreation" means an establishment that provides entertainment or recreation activities or services for a fee or admission charge. Includes bowling alleys, electronic game arcades, billiard halls, pool halls, sports clubs, commercial gymnasiums, dancehalls, and movie theatres.
9. **Community Development Director**. "Community Development Director" means the Community Development Director of the City of Capitola or his or her designee.
10. **Construction and Material Yards**. "Construction and material yards" means storage of construction materials or equipment on a site other than a construction site. Includes public utility buildings and service yards used by a governmental agency.

Attachment: Draft Zoning Code Public Review 02.04.2016 (1392 : Zoning Code Update)

11. **Cultural Institution**. "Cultural institution" means a public or nonprofit institution that engages in cultural, scientific, and/or educational enrichment. Includes libraries, museums, performing art centers, aquariums, environmental education centers, non-profit art centers and galleries, botanical gardens, and other similar uses.

D. "D" Terms

1. **Day Care Center**. "Day care center" means a facility that provides non-medical care and supervision of minors for periods of less than 24 hours. Includes nursery schools, day nurseries, child care centers, infant day care centers, cooperative day care centers, and similar uses.

2. **Daylight Plane.** "Daylight plane" means the imaginary line beginning at a height of 20 feet at the setback from a property line and extending into the parcel at an angle of 45 degrees.

1. **Density**. "Density" means the number of dwelling units per acre of land, excluding street rights-of-way, public easements, public open space, land under water, and certified wetlands and floodplains.

2. **Design Review**. "Design Review" means that process for the City to review and act on a Design Permit application.

3. **Development**. "Development" means any human-caused change to land that requires a permit or approval from the City.

4. **Development Standards**. "Development standards" means regulations in the Zoning Code that limit the size, bulk, or placement of structures or other improvements and modifications to a site.

5. **Discretionary Approval**. "Discretionary approval" means an action by the City by which individual judgment is used as a basis to approve or deny a proposed project.

6. **Drive-Through Facility**. "Drive-Through Facility" means a facility where a customer is permitted or encouraged, either by the design of physical facilities or by the service procedures offered, to be served while remaining seated within a vehicle. Includes drive-through restaurants, coffee shops, pharmacies, banks, automatic car washes, and other similar land uses.

7. **Duplex Home**. "Duplex home" means a residential structure that contains two dwelling units, each with its own entrance. Each unit within a duplex home provides complete, independent living facilities for one or more persons, including permanent provisions for living, sleeping, eating, cooking, and sanitation.

8. **Dwelling Unit**. "Dwelling unit" means a building or a portion of a building containing one or more habitable rooms used or designed for occupancy by one family for living and sleeping purposes, including kitchen and bath facilities.

Attachment: Draft Zoning Code Public Review 02.04.2016 (1392 : Zoning Code Update)

E. "E" Terms.

1. **Eating and Drinking Establishments**. "Eating and drinking establishments" means businesses primarily engaged in serving prepared food and/or beverages for consumption on or off the premises.

   a. "Bars and Lounges" means a business devoted to serving alcoholic beverages for consumption by guests on the premises and in which the serving of food is only incidental to the consumption of such beverages. Includes cocktail lounges, nightclubs, taverns, and other similar uses.

   b. "Restaurants and Cafes" means a business establishment serving food and beverages to customers where the food and beverages may be consumed on the premises or carried out and where more than 160 square feet of public area is open to customers. Includes full service restaurants, fast-food restaurants, coffee shops, cafes, and other similar eating and drinking establishments.

   c. "Take-Out Food and Beverage" means establishments where food and beverages may be consumed on the premises, taken out, or delivered, but where the area open to customers is limited to no more than 160 square feet. Includes take-out restaurants, take-out sandwich shops, limited service pizza parlors and delivery shops, and snack bars. Also includes catering businesses or bakeries that have a storefront retail component.

2. **Elderly and Long-Term Care**. "Elderly and Long Term Care" means establishments that provide twenty-four-hour medical, convalescent or chronic care to individuals who, by reason of advanced age, chronic illness or infirmity, are unable to care for themselves, and is licensed as a skilled nursing facility by the State of California, including but not limited to rest homes and convalescent hospitals, but not residential care, hospitals, or clinics

3. **Emergency Shelter**. Housing with minimal supportive services for homeless persons that is limited to occupancy of six months or less by a homeless person, as defined in Section 50801 of the California Health and Safety Code.

F. "F" Terms

1. **Farmers' Market**. "Farmers' market" means a market held in an open area or in a structure where groups of individual sellers offer for sale to the public such items as fresh produce, seasonal fruits, fresh flowers, locally produced arts and crafts items but excludes second-hand goods. Food and beverages dispensed from booths located on site is permitted as an accessory use.

2. **Fence**. "Fence" means a structure connected by boards, masonry, rails, panels, or other similar permanent building material for the purpose of enclosing space or separating parcels of land. This definition includes gates but excludes hedges and other living plants.

Attachment: Draft Zoning Code Public Review 02.04.2016 (1392 : Zoning Code Update)

3. **Floor Area**. "Floor area" means the sum of the horizontal areas of all floors of an enclosed structure, measured from the outside perimeter of the exterior walls as described in Section 17.48.040 (Floor Area and Floor Area Ratio).

4. **Floor Area Ratio.** "Floor area ratio" means the gross floor area of all of the buildings on the parcel divided by the net parcel area.

5. **Food Preparation**. "Food Preparation" means a businesses preparing and/or packaging food for off-site consumption, excluding those of an industrial character in terms of processes employed, waste produced, water used, and traffic generation. Includes catering kitchens, and small-scale specialty food production.

6. **Frontage**. "Frontage" means that portion of all property abutting on a side of a street between two intersecting or terminating streets, or the end of such street if it does not meet another.

G. "G" Terms

1. **Garage Sale.** "Garage Sale" means a temporary sale for the purpose of selling, trading or otherwise disposing of household furnishings, personal goods or other tangible properties of a resident of the premises on which the sale is conducted.

2. **Gas and Service Stations**. "Gas and service stations" means a retail business establishment supplying gasoline and oil and minor accessories for automobiles. Included in this definition are incidental food and beverage and car wash facilities.

3. **Group Housing**. "Group housing" means shared living quarters without separate kitchen or bathroom facilities for each room or unit, offered for rent for permanent or semi-transient residents on a weekly or longer basis. Includes rooming and boarding houses, single-room occupancy housing, dormitories, and other types of organizational housing, and extended stay hotels intended for long-term occupancy (30 days or more). Excludes hotels, motels, bread and breakfasts, and residential care facilities.

4. **Geological Hazard**. "Geological hazard" means a threat to life, property or public safety caused by geological or hydrological processes such as faulting and secondary seismic effects, including but not limited to: liquefaction, landsliding, erosion, flooding, tsunami or storm wave inundation.

5. **Government Offices**. "Government offices" means a place of employment occupied by governmental agencies and their employees. Includes offices for administrative, clerical, and public contact functions but excludes corporation yards, equipment service centers, and similar facilities that primarily provide maintenance and repair services and storage facilities for vehicles and equipment

6. **Grading.** "Grading" means Any and all activities involving earthwork, including placement or fill and/or excavation.

1. **Ground Floor.** "Ground floor" means the first floor of a building other than a cellar or basement that is closest to finished grade.

Attachment: Draft Zoning Code Public Review 02.04.2016 (1392 : Zoning Code Update)

H. "H" Terms

1. **Home Day Care**. "Home day care" means a facility providing daytime supervision and care for adults, children, or elderly located in the provider's own home.

   a. "Home day care facilities, large" means a day care home facility supervising 8 persons or less.

   b. "Home day care facilities, small" means a day care home facility supervising 9 to 14 persons.

2. **Historic Resource**. "Historic Resource" means either a Historic Landmark or a structure included in the Historic Structures List as defined in Section 17.84.020 (Types of Historic Resources).

3. **Home Occupation**. "Home occupation" means the conduct of a business within a dwelling unit or residential site, with the business activity being subordinate to the residential use of the property.

I. "I" Terms."

1. **Impervious Surface**. "Impervious surface" means any surface that does not permit the passage of water. Impervious surfaces include buildings, parking areas, and all paved surfaces.

J. "J" Terms. None.

K. "K" Terms"

1. **Kitchen**. "Kitchen" means any room or part of a room used or intended or designed to be used for cooking or the preparation of food for a single dwelling unit, and distinct from a "mini-bar/convenience area" which is intended as a supplemental food preparation area within a single-family home.

L. "L" Terms.

1. **Land Use**. An activity conducted on a site or in a structure, or the purpose for which a site or structure is designed, arranged, occupied, or maintained. The meaning of the term "use" is identical to "land use."

2. **Landscaping**. "Landscaping" means the planting and maintenance of living plant material, including the installation, use, and maintenance of any irrigation system for the plant material, as well as nonliving landscape material (such as rocks, pebbles, sand, mulch, walls, fences, or decorative paving materials).

3. **Local Coastal Program (LCP)**. "Local Coastal Program" means the City's land use plan, Zoning Code, Zoning Map and actions certified by the Coastal Commission as meeting the requirements of the California Coastal Act of 1976.

4. **Lodging**. "Lodging" means an establishment providing overnight accommodations to transient patrons for payment for periods of less than 30 consecutive days.

Attachment: Draft Zoning Code Public Review 02.04.2016 (1392 : Zoning Code Update)

a. "Bed and breakfast" means a residential structure that is in residential use with one or more bedrooms rented for overnight lodging and where meals may be provided.

b. "Hotel" means an establishment providing overnight lodging to transient patrons. Hotels and motels may provide additional services, such as conference and meeting rooms, restaurants, bars, or recreation facilities available to guests or to the general public. Includes motor lodges, motels, extended-stay hotels, and tourist courts, but does not include group housing or bed and breakfast establishments, which are separately defined and regulated.

5. **Lot**. See "Parcel."

M. "M" Terms.

1. **Maintenance and Repair Services**. "Maintenance and repair services" means businesses which provide construction, maintenance and repair services off-site, but which store equipment and materials or perform fabrication or similar work on-site. Includes off-site plumbing shops, general contractors, contractor's storage yards, appliance repair, janitorial services, electricians, pest control, heating and air conditioning, roofing, painting, landscaping, septic tank service, and other similar uses.

2. **Manufacturing, Custom**. "Manufacturing, custom" means establishments primarily engaged in on-site production of goods by hand manufacturing or artistic endeavor, which involves only the use of hand tools or small mechanical equipment and the incidental direct sale to consumers of only those goods produced on site. Typical uses include ceramic studios, candle making shops, woodworking, and custom jewelry manufacturers.

3. **Manufacturing, Light**. "Manufacturing, Llight" means the manufacture, predominantly from previously prepared materials, of finished products or parts, including processing, fabrication, assembly, treatment, and packaging of such products, and incidental storage, sales and distribution of such products, but excluding basic industrial processing and custom manufacturing.

4. **Material Change**. "Material change" means any significant alteration, by private or public action, in the external appearance or surface of an improvement, landscape or vista. This shall not include ordinary maintenance which does not require a permit.

5. **Ministerial Action**. "Ministerial action" means a City decision on a planning permit which involves only the use of fixed standards or objective measurements and does not require the exercise of discretion

6. **Medical Offices and Clinics**. "Medical offices and clinics" means a facility where medical, mental, dental, or other personal health services are provided on an outpatient basis using specialized equipment. Includes offices for physicians, dentists, and optometrists, diagnostic centers, blood banks and plaza centers, and

emergency medical clinics offered exclusively on an out-patient basis. Hospitals are excluded from this definition.

7. **Mixed Use**. "Mixed use" means two or more different land uses located in one structure or on one parcel or development sites.

8. **Modification.** "Modification" means any construction or physical change in the internal arrangement of rooms or the supporting members of a structure, or a change in the external appearance of any structure, not including painting.

9. **Multi-Family Dwelling**. Multi-family dwelling" means a building that contains three or more dwelling units, with each unit providing complete, independent living facilities for one or more persons, including permanent provisions for living, sleeping, eating, cooking, and sanitation.

N. "N" Terms.

1. **Nonconforming Structure**. "Nonconforming structure" means a structure which does not meet the current development standards for the district in which the structure is located. Development standards include, but are not limited to setbacks, height or lot coverage regulations of the zoning district, but do not include standards contained in the Uniform Codes, such as the Building Code.

2. **Nonconforming Use**. "Nonconforming use "means a use that lawfully occupied a building or land at the time the use was established, but that no longer conforms with the use regulations of the zoning district in which it is located.

O. "O" Terms.

1. **Open Space, Private**. "Open space, private" means open areas for outdoor living and recreation that are adjacent and directly accessible to a single dwelling unit, reserved for the exclusive use of residents of the dwelling unit and their guests.

2. **Open Space, Common**. "Open space, common" means areas for outdoor living and recreation that are intended for the use of residents and guests of more than one dwelling unit.

3. **Overlay Zone**. "Overlay zone" means an additional zoning district as shown on the Zoning Map that prescribes special regulations to a parcel in combination with the base zoning district.

P. "P" Terms.

1. **Parcel**. "Parcel" means a lot, tract, or area of land whose boundaries have been established by a legal instrument such as a deed or map recorded with the County of Santa Cruz, and which is recognized as a separate legal entity for purposes of transfer of title, except public easements or rights-of-way. The meaning of "lot" is identical to "parcel."

Attachment: Draft Zoning Code Public Review 02.04.2016 (1392 : Zoning Code Update)

2. **Parcel Area.** "Parcel area" means the total horizontal area included within the parcel lines of the parcel, including one-half the width of any alley or portion thereof abutting a parcel line.

3. **Parcel, Corner**. "Corner parcel" means a parcel situated at the junction of two or more intersecting streets, with a parcel line bordering on each of the two or more streets.

4. **Parcel Depth**. "Parcel depth" means the horizontal distance from the street line or front line of the parcel to the rear line, measured in the mean direction of the side lines of the parcel.

5. **Parcel Line**. "Parcel line" means the lines bounding a parcel.

6. **Parcel Line, Front**. "Front parcel line" means that dimension of a parcel or portion of a parcel, abutting on a street except the side of a corner parcel.

7. **Parcel Line, Rear**. "Rear-parcel line" means ordinarily, the line of a parcel which is generally opposite the line along the frontage of said parcel. In cases in which this definition is not applicable, the Community Development Director shall designate the rear parcel line.

8. **Parcel Line, Interior Side**. "Interior side parcel line" means any boundary line not a front line or a rear line shared with another parcel.

9. **Parcel Line, Exterior Side**. "Exterior side parcel line" means any boundary line not a front line or a rear line adjacent to a street.

10. **Parcel, Reversed Corner**. "Reversed corner parcel" means a corner parcel, the side street line of which is substantially a continuation of the front line of the parcel upon which it rears.

11. **Parcel Width**. "Parcel width" means the horizontal distance between the side parcel lines, measured at right angles to the parcel depth at a point midway between the front and rear parcel lines.

12. **Parking Lot**. "Parking lot" means an open area of land, a yard or other open space on a parcel other than a street or alley, used for or designed for temporary parking for more than four automobiles and available for public use, whether free, for compensation, or as an accommodation for clients or customers.

13. **Parking Space**. "Parking space" means land or space privately owned, covered or uncovered, laid out for, surfaced, and used or designed to be used for temporary parking or storage of standard motor vehicles.

14. **Parks and Recreational Facilities.** "Parks and recreational facilities" means non-commercial public facilities that provide open space and/or recreational opportunities. Includes parks, community gardens, community centers, passive and active open space, wildlife preserves, playing fields, tennis courts, swimming pools, gymnasiums, and other similar facilities.

Attachment: Draft Zoning Code Public Review 02.04.2016 (1392 : Zoning Code Update)

15. **Personal Services**. "Personal services" means an establishment that provides services to individuals and that may provide accessory retail sales of products related to the services provided. Includes barber shops and beauty salons, nail salons, dry cleaning establishments, self-service laundromats, tailors, tanning salons, State-licensed massage therapists, fitness studios, yoga studios, dance studios, pet grooming services, veterinary clinics, and other similar land uses. Also includes establishments that offer specialized programs in personal growth and development such as music, martial arts, vocal, fitness and dancing instruction.

16. **Planning Permit**. "Planning permit" means any permit or approval required by the Zoning Code authorizing an applicant to undertake certain land use activities.

17. **Primary Use**. "Primary use" means the main purpose for which a site is developed and occupied, including the activities that are conducted on the site a majority of the hours during which activities occur.

18. **Primary Structure**. "Primary structure" means a structure that accommodates the primary use of the site.

19. **Professional Office.** "Professional office" means a place of employment occupied by businesses providing professional, executive, management, or administrative services. Includes offices for accountants, architects, advertising agencies, insurance agents, attorneys, commercial art and design services, non-retail financial institutions, real estate agents, news services, photographers, engineers, employment agencies, real-estate agents, and other similar professions. Also includes research and development facilities that engages in research, testing, and development of commercial products or services in technology-intensive fields.

20. **Public Safety Facility**. "Public safety facility" means a facility operated by a governmental agency for the purpose of protecting public safety. Includes fire stations and other fire-fighting facilities, police stations, public ambulance dispatch facilities, and other similar land uses.

Q. "Q" Terms. None.

R. "R" Terms.

1. **Recreational Vehicle (RV)**. "Recreational vehicle" means a motor home, travel trailer, truck camper, or camping trailer, with or without motive power, originally designed for human habitation for recreational, emergency, or other occupancy, which meets all of the following criteria:

   a. Contains less than 320 square feet of internal living room area, excluding built-in equipment, including wardrobe, closets, cabinets, kitchen units or fixtures, and bath or toilet rooms;

   b. Contains 400 square feet or less of gross area measured at maximum horizontal projections;

   c. Is built on a single chassis; and

Attachment: Draft Zoning Code Public Review 02.04.2016 (1392 : Zoning Code Update)

d. Is either self-propelled, truck-mounted, or permanently towable on the highways without a towing permit.

2. **Recycling Collection Facility**. A center for the acceptance by donation, redemption, or purchase, of recyclable materials from the public.

3. **Remodel**. "Remodel" means a change or alteration in a building that does not increase the building's net square footage.

4. **Residential Care Facility**. "Residential care facility" means a state-licensed residential facility providing social and personal care for residents. Includes children's homes, homes for the elderly, orphanages, self-help group homes, and transitional housing for the homeless. Excludes facilities where medical care is a core service provided to residents, such as nursing and convalescent homes.

   a. "Residential care facility, large" means a residential care facility for 7 or more persons.

   b. "Residential care facility, small" means a residential care facility for 6 or fewer persons.

5. **Residential Mixed Use**. "Residential mixed use" means one or more structures on a single parcel that contains both dwelling units and non-residential uses such as retail, restaurants, offices, or other commercial uses. Different land uses may be within a single structure (vertical mixed use) or in separate structures on a single parcel (horizontal mixed use).

6. **Retail**. "Retail" means stores and shops selling merchandise to the general public. Includes drug stores, general merchandise stores, convenience shops, pet stores, department stores, and other similar retail establishments.

7. **Review Authority**. "Review authority" means the City official or City body that is responsible, under the provisions of the Zoning Code, for approving or denying a permit application or other request for official City approval.

S. "S" Terms.

1. **Salvage and Wrecking**. "Salvage and wrecking" means storage and dismantling of vehicles and equipment for sale of parts, as well as their collection, storage, exchange or sale of goods including, but not limited to, any used building materials, used containers or steel drums, used tires, and similar or related articles or property.

2. **Schools, Public or Private**. "Schools, Public or Private" means public or private facilities for education, including elementary, junior high, and high schools, providing instruction and study required in public schools by the California Education Code.

3. **Secondary Dwelling Unit**. "Secondary dwelling unit" means a self-contained living unit, either attached to or detached from, and in addition to, the primary residential unit on a single parcel.

Attachment: Draft Zoning Code Public Review 02.04.2016 (1392 : Zoning Code Update)

a. "Secondary dwelling unit, attached," means a secondary dwelling unit that shares at least one common wall with the primary residential unit.

b. "Secondary dwelling unit, detached," means a secondary dwelling unit that does not share a common will with the primary residential unit.

4. **Setback**. "Setback" means the minimum allowable horizontal distance from a given point or line of reference such as a street right-of-way to the nearest vertical wall or other element of a building or structure as defined in this chapter.

5. **Single-Family Dwelling**. "Single-family dwelling" means a residential structure designed for occupancy by one household. A single-family home provides complete, independent living facilities for one or more persons, including permanent provisions for living, sleeping, eating, cooking, and sanitation.

6. **Site**. "Site" means a parcel or adjoining parcels that are under single ownership or single control, and that are considered a unit for the purposes of development or other use.

7. **Site Area**. "Site area" means the total area included within the boundaries of a site.

8. **Self Storage**. "Self storage" means a structure or group of structures with controlled access that contains individual and compartmentalized stalls or lockers for storage of customers' goods.

9. **Split Zoning**. "Split zoning" means a parcel on which two or more zoning districts apply due to zoning district boundaries crossing or otherwise not following the parcel boundaries.

10. **Story**. "Story" means that portion of a building included between the upper surface of any floor and the upper surface of the floor next above, except that the topmost story shall be that portion of a building included between the upper surface of the topmost floor and the ceiling or roof above. If the finished floor level directly above a basement, cellar or unused under-floor space is more than 6 feet above grade as defined in this chapter for more than 50 percent of the total perimeter or is more than 12 feet above grade as defined in this chapter at any point, such basement, cellar or unused under-floor space shall be considered as a story.

11. **Story, Half**. "Half story" means a partial story under a gable, hip or gambrel roof, the wall plates of which are at least two opposite exterior walls and which are not more than four feet above the floor plate of the second floor, and may include shed or dormer projections from those walls. Dormers may constitute not more than one-third of the length of the wall upon which they are located, whether as a single unit or multiple dormers.

12. **Street**. "Street" means a public way more than 20 feet in width which affords a primary or principal means of access to abutting property.

Attachment: Draft Zoning Code Public Review 02.04.2016 (1392 : Zoning Code Update)

13. **Structural Alterations**. "Structural alterations" means any change in the supporting members of a building, such as bearing walls, columns, beams, girders, floor, ceiling or roof joists and roof rafters, or change in roof exterior lines which would prolong the life of the supporting members of a building.

14. **Structure**. "Structure" means anything constructed or erected that requires attachment to the ground, or attachment to something located on the ground. Pipelines, poles, wires, and similar installations erected or installed by public utility districts or companies are not included in the definition of "structure." In the coastal zone, "structure" includes, but is not limited to, any building, road, pipe, flume, conduit, siphon, aqueduct, telephone line, and electrical power transmission and distribution line.

T. "T" Terms.

1. **Temporary Structure**. "Temporary structure" means a structure that is erected for a limited period of time, typically no longer than 180 days, and that does not permanently alter the character or physical facilities of a property.

2. **Temporary Use**. "Temporary use" means a short-term activity that may or may not meet the normal development or use standards of the applicable zone, but that occurs for a limited period of time, typically less than 12 months and does not permanently alter the character or physical facilities of a property.

3. **Trellis.** "Trellis" means a structure made from an open framework or lattice of interwoven or intersecting pieces of wood, bamboo or metal made to support and display climbing plants.

U. "U Terms.

1. **Unattended Donation Box**. "Unattended donation box" means any unattended container, receptacle, or similar device used for soliciting and collecting donations of clothing or other salvageable personal property. Recycle bins for the collection of recyclable materials are not included in this definition.

2. **Urban Agriculture**. "Urban agriculture" means activities involving the raising, cultivation, processing, marketing, and distribution of food in urban areas.

   a. "Home garden" means the property of a single-family or multifamily residence used for the cultivation of fruits, vegetables, plants, flowers, or herbs by the residents of the property, guests of the property owner, or a gardening business hired by the property owner.

   b. "Community garden" means privately or publicly owned land used for the cultivation of fruits, vegetables, plants, flowers, or herbs by multiple users. Community gardens may be divided into separate plots for cultivation by one or more individuals or may be farmed collectively by members of the group and may include common areas maintained or used by group members.

Attachment: Draft Zoning Code Public Review 02.04.2016 (1392 : Zoning Code Update)

c. "Urban farm" means privately or publicly owned land used for the cultivation of fruits, vegetables, plants, flowers, or herbs by an individual, organization, or business with the primary purpose of growing food for sale.

3. **Use**. See "Land Use."

4. **Utilities, Major**. "Utilities, major" means generating plants, electric substations, solid waste collection, including transfer stations and materials recovery facilities, solid waste treatment and disposal, water or wastewater treatment plants, and similar facilities of public agencies or public utilities

5. **Utilities, Minor**. "Utilities, Minor" means infrastructure facilities that are necessary to serve development within the immediate vicinity such as electrical distribution lines and underground water and sewer lines.

V. "V" Terms.

1. **Vacation Rental Use**. "Vacation rental use" means the occupancy for hire of real property or portion thereof for a period of less than 30 consecutive calendar days. "For hire," for purposes of this section, does not include:

   a. The owner or long term lessee of the property, without consideration, allowing family or friends to use the property;

   b. An arrangement whereby the owner or long term lessee of the property agrees to a short term trade with another property owner or long term lessee whereby the sole consideration is each concurrently using the other's property.

2. **Vehicle Repair**. Vehicle repair means an establishment for the repair, alteration, restoration, or finishing of any vehicle, including body repair, collision repair, painting, tire and battery sales and installation, motor rebuilding, tire recapping and retreading, and towing. Repair shops that are incidental to a vehicle sales or rental establishment on the same site are excluded from this definition.

3. **Vehicle Sales and Rental**. "Vehicle sales and rental" means an establishment for the retail sales or rental of new or used vehicles. Includes the sale of vehicle parts and vehicle repair, provided that these activities are incidental to the sale of vehicles.

W. "W" Terms.

1. **Wall.** "Wall" means a permanent upright linear structure made of stone, concrete, masonry, or other similar material.

2. **Warehousing and Distribution**. "Warehousing and distribution" means an establishment used primarily for the storage and/or distributing goods to retailers, contractors, commercial purchasers or other wholesalers, or to the branch or local offices of a company or organization. Includes vehicle storage, moving services, general delivery services, refrigerated locker storage facilities, and other similar land uses.

Attachment: Draft Zoning Code Public Review 02.04.2016 (1392 : Zoning Code Update)

3. **Wholesaling.** "Wholesaling" means indoor storage and sale of goods to other firms for resale. Wholesalers are primarily engaged in business-to-business sales, but may sell to individual consumers through mail or Internet orders. Wholesalers normally operate from a warehouse or office having little or no display of merchandise, and are not designed to solicit walk-in traffic.

X. "X" Terms. None.

Y. "Y" Terms.

1. **Yard**. "Yard" means an open space, other than a court, on the same parcel with a building, unoccupied and unobstructed from the ground upward, except for such encroachments allowed by the Zoning Code.

2. **Yard, Front**. "Front yard" means a yard extending across the full width of the parcel, the depth of which is the minimum horizontal distance between the front line of the parcel and the nearest line of the main building or enclosed or covered porch. On a corner parcel the front line of the parcel is ordinarily construed as the least dimension of the parcel fronting on a street.

3. **Yard, Rear**. "Rear yard" means a yard extending across the full width of the parcel, and measured between the rear line of the main building or enclosed or covered porch nearest the rear line of the parcel; the depth of the required rear yard shall be measured horizontally.

4. **Yard, Side**. "Side yard" means a yard on each side of the main building extending from the front yard to the rear yard, the width of each yard being measured between the side line of the parcel and the nearest part of the main building or enclosed or covered porch.

5. **Wireless Communications Facility**. "Wireless Communications Facility" means a facility that transmits or receives electromagnetic signals for the purpose of transmitting voice or data communications.

Attachment: Draft Zoning Code Public Review 02.04.2016 (1392 : Zoning Code Update)