CAPITOLA WHARF

RESILIENCY AND PUBLIC ACCESS IMPROVEMENT PHASE 2

VICINITY MAP
SCALE: NTS

INDEX OF DRAWINGS

SHEET NO	SHEET TITLE
G-001	TITLE SHEET
G-002	GENERAL NOTES
G-003	EXISTING PHOTOS 1 OF 2
G-004	EXISTING PHOTOS 2 OF 2
C-100	EXISTING WHARF
C-101	OVERALL WHARF STORM DAMAGE
C-102	TRESTLE STORM DAMAGE
C-103	OVERALL WHARF
C-104	WIDENING WHARF PLAN AND SECTION
C-105	WHARF PILE REPAIRS
C-110	DECK, FRAMING AND PILE PLANS (BENTS 0-24)
C-111	DECK, FRAMING AND PILE PLANS (BENTS 24-42)
C-112	DECK, FRAMING AND PILE PLANS (BENTS 42-51)
C-113	DECK AND FRAMING PLANS (BENTS 51-76)
C-114	PILE PLAN (BENTS 51-76)
C-115	ABUTMENT PLAN
C-120	SECTIONS
C-121	TYPICAL DETAILS 1 OF 3
C-122	TYPICAL DETAILS 2 OF 3
C-123	TYPICAL DETAILS 3 OF 3
C-124	SECURITY GATE DETAILS
C-125	DOCK PLAN AND DETAILS
C-126	WHARF RESTROOMS 1 OF 2
C-127	WHARF RESTROOMS 2 OF 2
C-128	WHARF RESTROOMS FOUNDATION DETAILS
C-129	WHARF RESTROOMS RAMP AND LANDING DETAILS
U-001	EXISTING UTILITY PLAN
U-002	PROPOSED UTILITY PLAN
U-003	SEWAGE EJECTOR PUMP NEAR ABUTMENT
U-004	FIRE STANDPIPE PLAN
U-005	SINGLE LINE DIAGRAM AND DETAILS
E-001	ELECTRICAL NOTES
E-002	ELECTRICAL NOTES, ABBREVIATIONS, AND LEGEND
ED101	ELECTRICAL DEMOLITION PLAN
E-101	ELECTRICAL SITE PLAN
E-501	ELECTRICAL DETAILS
E-601	SINGLE LINE DIAGRAM AND SCHEDULE

LOCATION PLAN
SCALE: NTS

TIDAL DATUM (MONTEREY GAUGE)

HIGHEST OBSERVED TIDE	+7.88ft
HIGHEST ASTRONOMICAL TIDE	+7.07ft
MEAN HIGHER HIGH WATER (MHHW)	+5.33ft
MEAN SEA LEVEL (MSL)	+2.83ft
MEAN LOWER LOW WATER (MLLW)	0ft
NORTH AMERICAN VERTICAL DATUM (NAVD)	-0.13ft
LOWEST ASTRONOMICAL TIDE	-1.94ft
LOWEST OBSERVED TIDE	-2.39ft

REGISTERED PROFESSIONAL ENGINEER JESSICA LAUREN KAHN No. 81258 CIVIL STATE OF CALIFORNIA

APPROVED, CITY OF CAPITOLA

Jessica Kahn

REF 81258

CITY OF CAPITOLA INCORPORATED 1949

Mark	Description	Date	Appr.

CAPITOLA WHARF
RESILIENCY AND PUBLIC ACCESS IMPROVEMENT PHASE 2

TITLE SHEET

moffatt & nichol
2185 N. CALIFORNIA BLVD.
SUITE 500
WALNUT CREEK, CA 94596

Designed by: AC
Date: 5/19/2023
Rev.
Dwn by: AC
Ckd by: BP
M&N Project No.: 9154-01
Reviewed by:
Drawing code:
Submitted by: MOFFATT & NICHOL
Drawing Scale:
Plot scale: 1:1 (D SHEET)

REGISTERED PROFESSIONAL ENGINEER BRADFORD A. PORTER No. 042795 Exp. 3-31-24 CIVIL STATE OF CALIFORNIA

SEAL

Sheet Reference No.

G-001

INDEX: 1 OF 32

File: Q:\WC\9154-01 capitola wharf beach\4_CADD_Active_Wharf_sheet set\9154\01-G-001 ; Plotted: 5/19/2023 11:20 AM by ESTRADA, JUSTIN ; Saved: 5/19/2023 11:19 AM by JESTRADA

DRAWING SCALES SHOWN BASED ON 22"x34" DRAWING

GENERAL NOTES

1. ELEVATIONS SHOWN ARE IN FEET REFERENCED TO MEAN LOWER LOW WATER.
2. DEMOLITION OF EXISTING FEATURES SHALL BE LIMITED TO THE ITEMS SHOWN ON THE PLANS AND DESCRIBED IN THE SPECIFICATIONS. IT SHALL BE THE CONTRACTOR'S RESPONSIBILITY TO REPAIR AND/OR REPLACE EXISTING FEATURES TO REMAIN THAT ARE DAMAGED BY THE CONTRACTOR.
3. WHERE REFERENCE IS MADE TO THE CITY ON THESE DRAWINGS, THE CITY IS DEFINED AS THE CITY OF CAPITOLA OR REPRESENTATIVES OF THE CITY OF CAPITOLA.
4. CONTACT THE CITY IMMEDIATELY UPON FINDING ANY FIELD CONDITIONS THAT CONFLICT WITH THE INFORMATION ON THESE DRAWINGS. ALL FIELD ADJUSTMENTS MUST BE APPROVED BY THE CITY BEFORE CONSTRUCTION OF SAID ADJUSTMENTS. FAILURE TO DO SO WILL RESULT IN THE CONTRACTOR ASSUMING FULL RESPONSIBILITY FOR ANY REQUIRED REVISIONS OR FIELD MODIFICATIONS, AS DIRECTED BY THE CITY, AT NO ADDITIONAL COST.
5. PROVIDE CONSTRUCTION SITE SECURITY FOR THE DURATION OF THE CONTRACT PERIOD AND AS SPECIFIED.
6. FURNISH, INSTALL AND MAINTAIN ALL WARNING SIGNS AND DEVICES NECESSARY TO SAFEGUARD THE GENERAL PUBLIC AND THE WORK, AND PROVIDE PROPER AND SAFE ROUTING OF VEHICULAR AND PEDESTRIAN TRAFFIC DURING THE PERFORMANCE OF THE WORK. THIS REQUIREMENT SHALL APPLY CONTINUOUSLY AND SHALL NOT BE LIMITED TO WORKING HOURS.
7. KEEP THE PROJECT SITE IN A NEAT AND ORDERLY CONDITION, FREE OF RUBBISH AND DEBRIS, AT ALL TIMES.
8. ALL WORK SHOWN SHALL BE NEW UNLESS OTHERWISE NOTED.
9. ALL WORK SHALL CONFORM TO THE PERMIT CONDITIONS ISSUED FOR THE PROJECT BY THE REGULATORY AGENCIES:
   a. CALIFORNIA COASTAL COMMISSION.
   b. US ARMY CORP OF ENGINEERING.
   c. REGIONAL WATER QUALITY CONTROL BOARD.
9. AN HISTORIC RECORDS SEARCH HAS BEEN PERFORMED FOR THE PROJECT AND A REVIEW OF THE HISTORIC INTEGRITY PERFORMED. THE FOLLOWING SHALL BE ADHERED TO DURING THE PROJECT:
   a. NO EXCAVATIONS SHALL OCCUR WITHIN THE ON-SHORE PORTIONS OF THE PROJECT SITE OR STAGING AREA, INCLUDING THE RETAINING WALL AT THE WHARF ENTRANCE, THE WHARF PARKING LOT AND WHARF ROAD.

CODES AND STANDARDS

1. 2019 CALIFORNIA BUILDING CODE (CBC)
2. AMERICAN INSTITUTE OF STEEL CONSTRUCTION (AISC), STEEL CONSTRUCTION MANUAL, 14TH EDITION
3. AMERICAN FOREST & PAPER ASSOCIATION, NATIONAL DESIGN SPECIFICATION FOR WOOD CONSTRUCTION, NDS 2018 EDITION
4. AMERICAN SOCIETY OF CIVIL ENGINEERS, MINIMUM DESIGN LOADS FOR BUILDING AND OTHER STRUCTURES, ASCE 7-16
5. AMERICAN CONCRETE INSTITUTE (ACI), BUILDING CODE REQUIREMENTS FOR STRUCTURAL CONCRETE AND COMMENTARY, ACI 318-19.

FRP PILES

1. FRP PILE SHALL BE 12"Ø WITH 1/2" WALL THICKNESS AS PRODUCED BY CREATIVE COMPOSITES GROUP OR APPROVED EQUAL.
2. FRP PILES SHALL HAVE A THICK HDPE SLEEVE AS PROVIDED BY THE MANUFACTURER. HDPE SLEEVE SHALL EXTEND 1 FT BELOW MUDLINE.
3. FRP PILES SHALL HAVE A FRP STRUCTURAL CAP AS PROVIDED BY THE MANUFACTURER.THE FRP CAP SHALL BE INSTALLED PER MANUFACTURER'S RECOMMENDATIONS.

LUMBER

1. STRUCTURAL LUMBER SHALL BE DOUGLAS FIR-LARCH NO. 1 OR BETTER AS SPECIFIED BY THE WEST COAST LUMBER INSPECTION BUREAU, VISUALLY GRADED LUMBER.
2. STRUCTURAL LUMBER SHALL BE CHEMICALLY TREATED WITH ACZA FOR MARINE EXPOSURE, SALTWATER SPLASH PER AWPA STANDARD 4B, 4C.

HARDWARE

1. ALL STEEL PLATES, BOLTS, LAG BOLTS, NUTS, AND WASHERS SHALL BE HOT DIP GALVANIZED, BOLTS SHALL HAVE FLAT WASHERS AT THE NUT AND HEAD. UNLESS NOTED OTHERWISE.
2. BOLTS SHALL CONFORM TO ASTM A307A.
3. DECK SCREWS SHALL BE 8" STRONG-DRIVE SDWS TIMBER SS SCREWS.
4. DRIFT PIN MATERIAL SHALL BE SS, DIAMETER TO MATCH EXISTING.
5. PILE BANDING SHALL BE $\frac{3}{4}$" WIDE BY 0.030" THICK 316SS WITH AN "EAR-LOKT" BUCKLE, AS MANUFACTURED BY "BAND-IT" OR APPROVED EQUAL.

SURFACE PREPARATION OF TIMBER PILES

1. MECHANICALLY (WATER BLAST/WIRE BRUSH) REMOVE GREASE, RUST, MARINE GROWTH, LOOSE AND UNSOUND TIMBER, AND OTHER INHIBITING MATERIALS.
2. THE EXTENT OF (E) PILE CLEANING SHALL BE LIMITED TO THE EXTENT OF (N) JACKETS.

PILE REPAIR

1. TIMBER PILES INDICATED SHALL BE REPAIRED WITH A FIBERGLASS JACKET ENCASING A STEEL REINFORCED GROUT FILL, DENSO SEA-SHIELD FX-70 SYSTEM OR CITY APPROVED EQUAL.
2. FIBERGLASS JACKET AND GROUT PORTS SHALL BE INSTALLED PER MANUFACTURER'S SPECIFICATIONS.
3. MONITOR PRESSURE-INJECTION OR GRAVITY-FEED APPLICATION TO ENSURE MATERIAL DOES NOT LEAK INTO WATER.
4. EXCESS GROUT PUMPED OUT THROUGH PORTS OR JACKET OPENINGS SHALL BE COLLECTED AND REMOVED FROM THE WATER.

GROUT

1. CEMENTITIOUS UNDERWATER GROUT SHALL BE SIMPSON FX-225 NON-SHRINK CEMENTITIOUS UNDERWATER GROUT OR CITY APPROVED EQUAL.
2. MARINE EPOXY GROUT SHALL BE SIMPSON FX-60-6MP MULTI-PURPOSE MARINE EPOXY GROUT OR CITY APPROVED EQUAL.
3. TOP SEAL EPOXY SHALL BE FX-763 TROWEL-GRADE EPOXY MIXED WITH FX-702 SILICA FILLER OR CITY APPROVED EQUAL.
4. ALL GROUT SHALL BE PLACED TO OBTAIN UNIFORM COVERAGE WITHOUT VOIDS. SUBMIT A GROUTING PROCEDURE FOR APPROVAL BY THE CITY.

REINFORCEMENT

1. ALL REINFORCEMENT BARS SHALL CONFORM TO ASTM A615 GRADE 60.
2. REINFORCING BARS SHALL NOT BE WELDED WITHOUT THE CITY'S APPROVAL.

CONDUITS

1. CONDUITS SHALL BE RELOCATED AS NECESSARY TO ACCOMMODATE REPAIRS.

REMOVAL NOTES

1. THE SITE SHALL BE CLEANED OF DEBRIS AT THE END OF EACH DAY AND AT THE CONCLUSION OF REMOVAL WORK.

ADD ALTERNATE BID ITEMS

1. REPLACING OR REPAIRING PILES AS SHOWN ON SHEET C-103.
2. REPLACING EXISTING POWER CABLES FROM PANELBOARD "MDP-L-WHARF" TO BENT 57 AS SHOWN ON SHEET E-101.

QUANTITIES ORDERED BY THE CITY

THE FOLLOWING MATERIALS HAVE BEEN ORDERED BY THE CITY. THE BID ITEM QUANTITIES DO NOT ACCOUNT FOR THESE MATERIALS, BUT THESE MATERIALS SHOULD BE USED FOR CONSTRUCTION:

1.	DECKING:	288 EA - 3" X 12" X 18' 216 EA - 3" X 12" X 20'
2.	STRINGERS:	60 EA - 6" X 12" X 16'
3.	PILE CAPS:	10 EA - 12" X 12" X 18' 2 EA - 12" X 12" X 20'
4.	PILES:	6 EA - 28' 27 EA - 33' 8 EA - 38' 5 EA - 43' 1 EA - 63'

ABBREVIATIONS

&	AND
@	AT
ACI	AMERICAN CONCRETE INSTITUTE
AISC	AMERICAN INSTITUTE OF STEEL CONSTRUCTION
APPROX	APPROXIMATE
ASCE	AMERICAN SOCIETY OF CIVIL ENGINEERS
ASTM	ASTM INTERNATIONAL
AWPA	AMERICAN WOOD PROTECTION ASSOCIATION
BLDG	BUILDING
CBC	CALIFORNIA BUILDING CODE
CL	CENTER LINE
CLR	CLEAR
CONC	CONCRETE
DIA, Ø	DIAMETER
(E)	EXISTING
EHW	EXTREME HIGH WATER
EL	ELEVATION
F&I	FURNISH AND INSTALL
FM	FORCE MAIN
F.H.	FLAT HEAD
FRP	FIBER REINFORCED POLYMER
FT	FEET
HDG	HOT-DIP GALVANIZED
HDPE	HIGH DENSITY POLYETHYLENE
HSS	HOLLOW STRUCTURAL SECTION
HTL	HIGH TIDE LINE
LF	LINEAL FEET
MAX	MAXIMUM
MIN	MINIMUM
MHW	MEAN HIGH WATER
MHHW	MEAN HIGHER HIGH WATER
MLLW	MEAN LOWER LOW WATER
MSL	MEAN SEA LEVEL
MTL	MEAN TIDE LEVEL
(N)	NEW
NDS	NATIONAL DESIGN SPECIFICATION
NO.	NUMBER
NTS	NOT TO SCALE
OC	ON CENTER
O.D.	OUTER DIAMETER
PL	PLATE
SIM	SIMILAR
SS	STAINLESS STEEL
TYP	TYPICAL
UON	UNLESS OTHERWISE NOTED
VIF	VERIFY IN FIELD

CROSS REFERENCE LEGEND

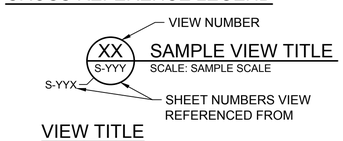

VIEW TITLE

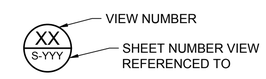

DETAIL CALLOUT

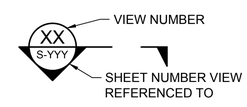

SECTION CALLOUT

Mark	Description	Date	Appr

CAPITOLA WHARF RESILIENCY AND PUBLIC ACCESS IMPROVEMENT PHASE 2

GENERAL NOTES

moffatt & nichol
2185 N. CALIFORNIA BLVD.
SUITE 500
WALNUT CREEK, CA 94596

Designed by: AC | Date: 5/19/2023 | Rev.
Dwn by: AC | Ckd by: BP | M&N Project No.: 9154-01
Reviewed by: | Drawing code:
Submitted by: MOFFATT & NICHOL | Drawing Scale: Plot scale: 1:1 (D SHEET)

REGISTERED PROFESSIONAL ENGINEER BRADFORD A. PORTER No. 042795 Exp. 3-31-24 CIVIL STATE OF CALIFORNIA
SEAL

Sheet Reference No.
G-002
INDEX: 2 OF 37

File: Q:\WC\9154-01 capitola wharf beach\4_CADD_Active_Wharf_sheet set\9154\01-G-002 ; Plotted: 5/19/2023 11:20 AM by ESTRADA, JUSTIN ; Saved: 5/19/2023 11:19 AM by JESTRADA

DRAWING SCALES SHOWN BASED ON 22"x34" DRAWING

PHOTO 1
OVERALL VIEW OF WHARF

PHOTO 2
ENTRY GATE

PHOTO 3
WHARF BELOW CRANE

PHOTO 4
SECURITY GATE

PHOTO 5
TRESTLE

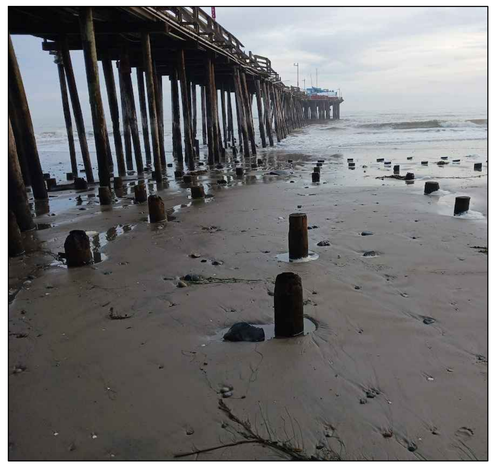

PHOTO 6
EXISTING PILE STUBS

PHOTO 7
UTILITIES BELOW DECK

PHOTO 8
UTILITIES AT SEWAGE EJECTOR PUMP

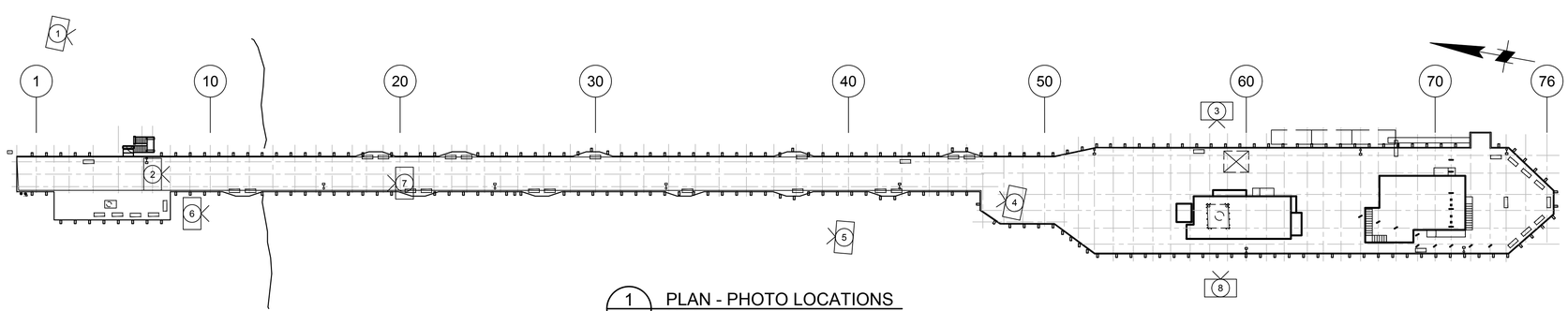

1 - PLAN - PHOTO LOCATIONS
SCALE: 1" = 40'

40' 0' 40' 80'
SCALE: 1"=40'

LEGEND:

(#) PHOTO REFERENCE SEE G-003
DIRECTION OF PHOTO

CITY OF CAPITOLA
INCORPORATED 1949

Mark	Description	Date	Appr

CAPITOLA WHARF RESILIENCY AND PUBLIC ACCESS IMPROVEMENT PHASE 2

EXISTING PHOTOS 1 OF 2

Date: 5/19/2023
Rev.
M&N Project No.: 9154-01
Drawing code:
Drawing Scale:
Plot scale: 1:1 (D SHEET)

Designed by: AC
Dwn by: AC
Ckd by: BP
Reviewed by:
Submitted by: MOFFATT & NICHOL

moffatt & nichol
2185 N. CALIFORNIA BLVD.
SUITE 500
WALNUT CREEK, CA 94596

REGISTERED PROFESSIONAL ENGINEER
BRADFORD A. PORTER
No. 042795
Exp. 3-31-24
CIVIL
STATE OF CALIFORNIA
SEAL

Sheet Reference No.
G-003
INDEX: 3 OF 37

File: Q:\WC\9154-01 capitola wharf beach\4_CADD_Active_Wharf_sheet set\9154G-003 ; Plotted: 5/19/2023 11:20 AM by ESTRADA, JUSTIN ; Saved: 5/19/2023 11:14 AM by JESTRADA

DRAWING SCALES SHOWN BASED ON 22"x34" DRAWING

PHOTO 9
STORM DAMAGE AT STAIRS

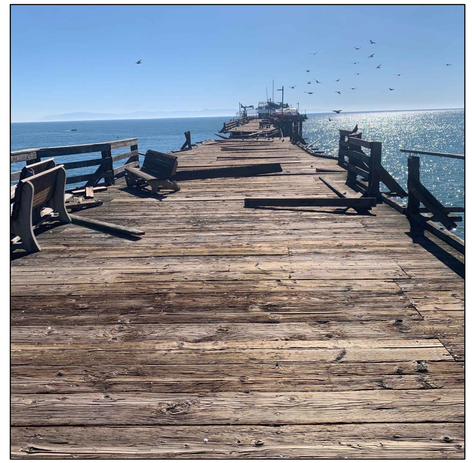

PHOTO 10
STORM DAMAGE AT TRESTLE

PHOTO 11
STORM DAMAGE AT TRESTLE

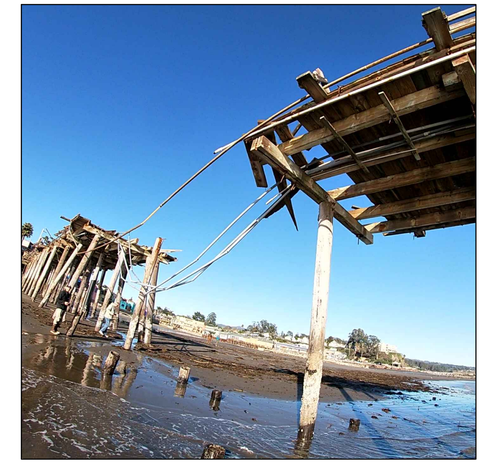

PHOTO 12
STORM DAMAGE AT TRESTLE

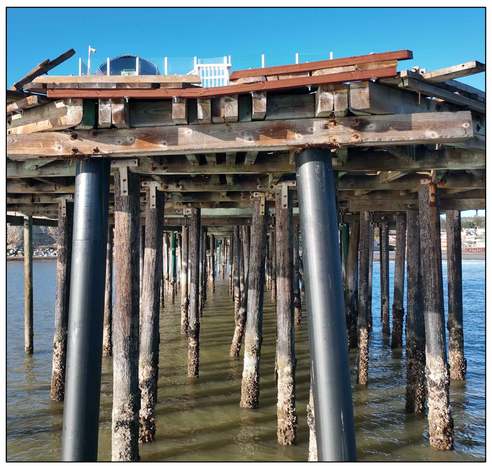

PHOTO 13
PILES OFF PILE CAP AT WHARF HEAD

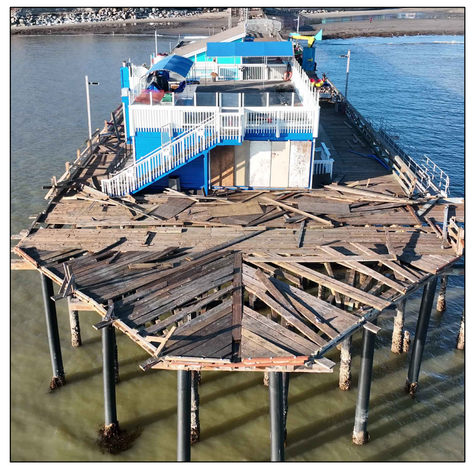

PHOTO 14
WHARF HEAD

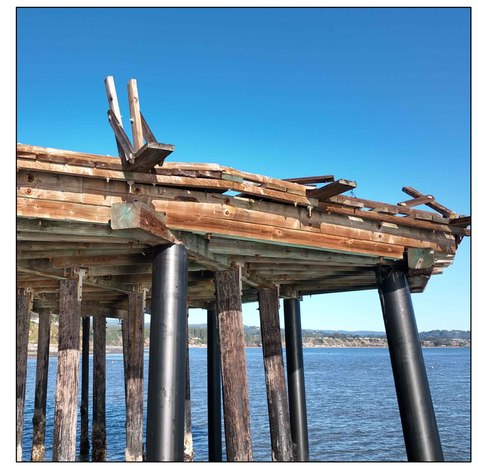

PHOTO 15
PILE CAPS AT WHARF HEAD

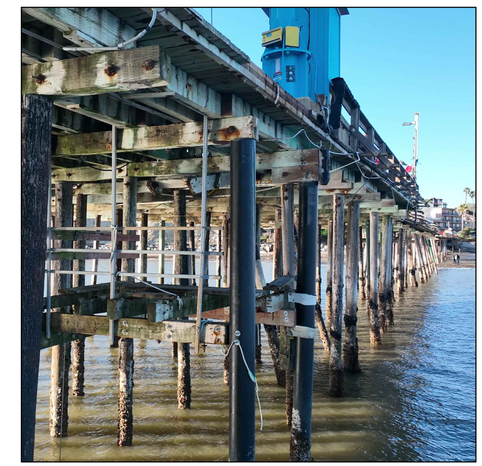

PHOTO 16
WHARF BELOW CRANE

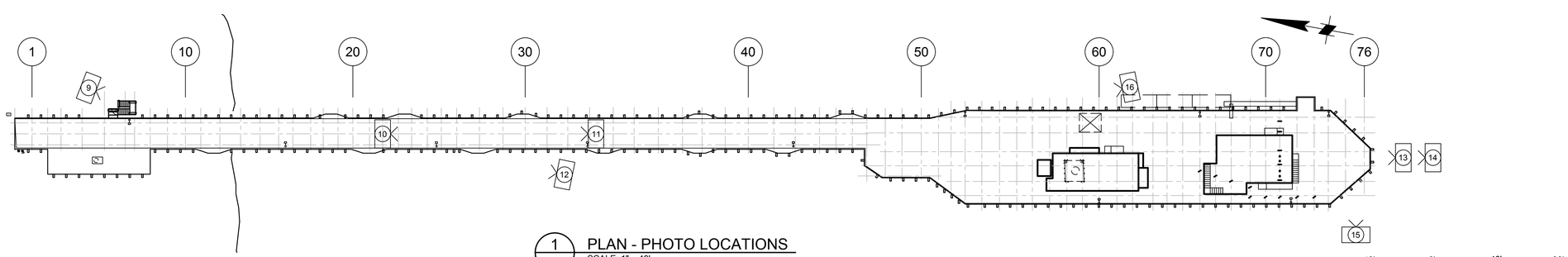

1 - PLAN - PHOTO LOCATIONS
SCALE: 1" = 40'

SCALE: 1"=40'

LEGEND:

(#) PHOTO REFERENCE SEE G-003
DIRECTION OF PHOTO

CITY OF CAPITOLA
INCORPORATED 1949

Mark	Description	Date	Appr

CAPITOLA WHARF RESILIENCY AND PUBLIC ACCESS IMPROVEMENT PHASE 2

EXISTING PHOTOS 2 OF 2

moffatt & nichol
2185 N. CALIFORNIA BLVD.
SUITE 500
WALNUT CREEK, CA 94596

Designed by: AC
Dwn by: AC
Cad by: BP
Reviewed by:
Submitted by: MOFFATT & NICHOL
Date: 5/19/2023
Rev: -
M&N Project No.: 9154-01
Drawing code:
Drawing Scale:
Plot scale: 1:1 (D SHEET)

REGISTERED PROFESSIONAL ENGINEER
BADFORD A. PORTER
No. 042795
Exp. 3-31-24
CIVIL
STATE OF CALIFORNIA
SEAL

Sheet Reference No.
G-004
INDEX: 4 OF 37

File: Q:\WC\9154-01 capitola wharf beach\4_CADD_Active_Wharf_sheet set\915401-G-004 , Plotted: 5/19/2023 11:20 AM by ESTRADA, JUSTIN , Saved: 5/19/2023 11:14 AM by JESTRADA

DRAWING SCALES SHOWN BASED ON 22"x34" DRAWING

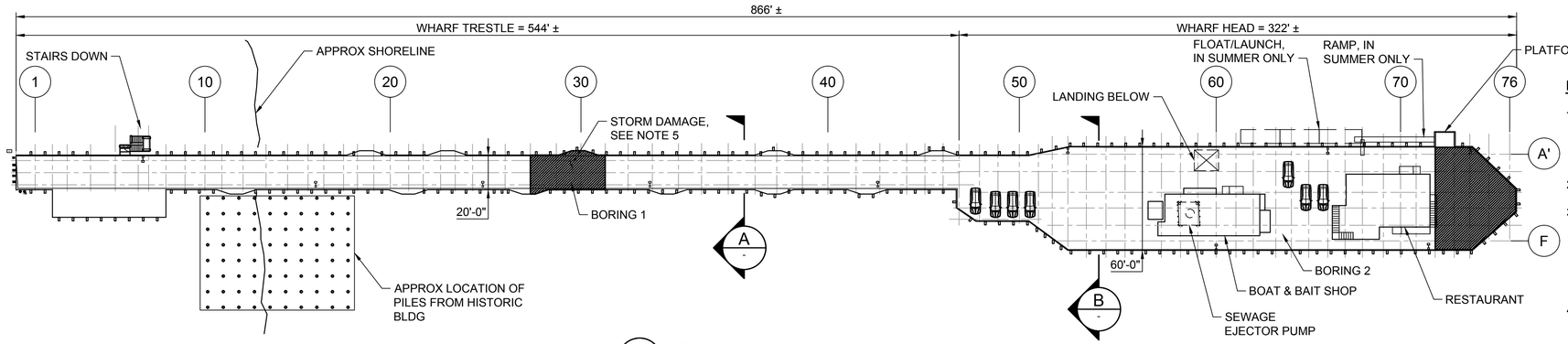

1 PLAN
SCALE: 1" = 40'

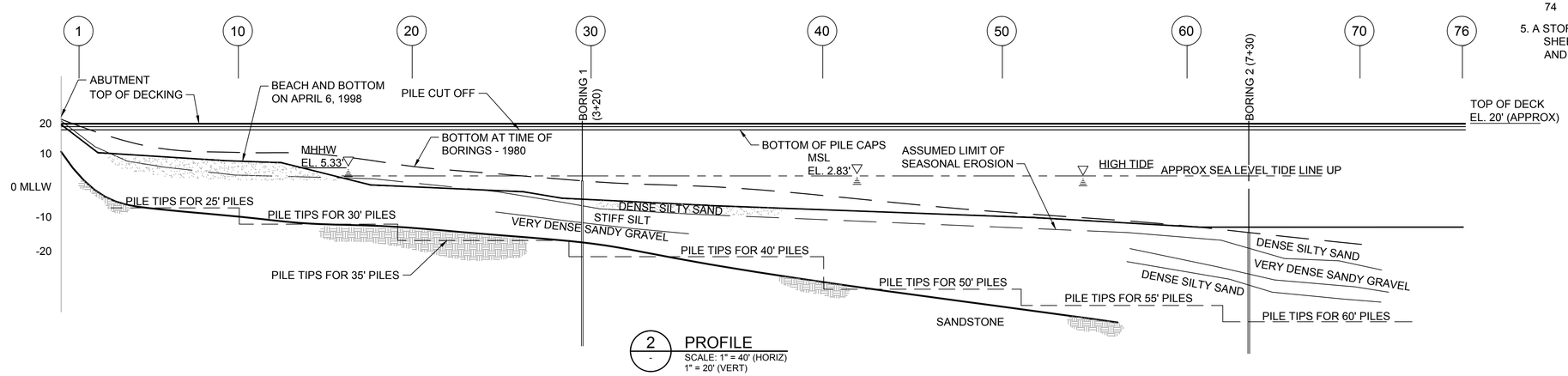

2 PROFILE
SCALE: 1" = 40' (HORIZ)
1" = 20' (VERT)

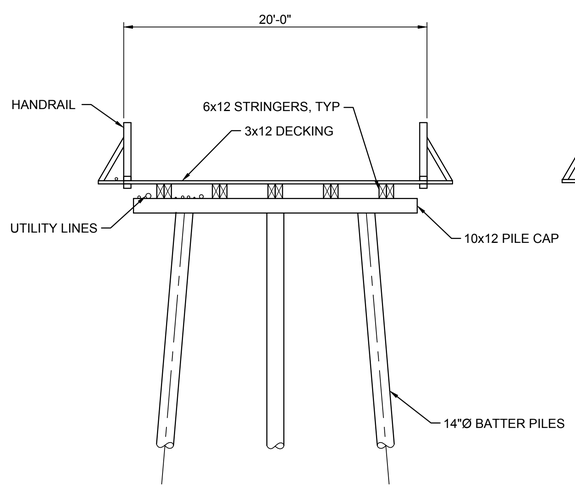

A TRESTLE SECTION
SCALE: 1" = 5'

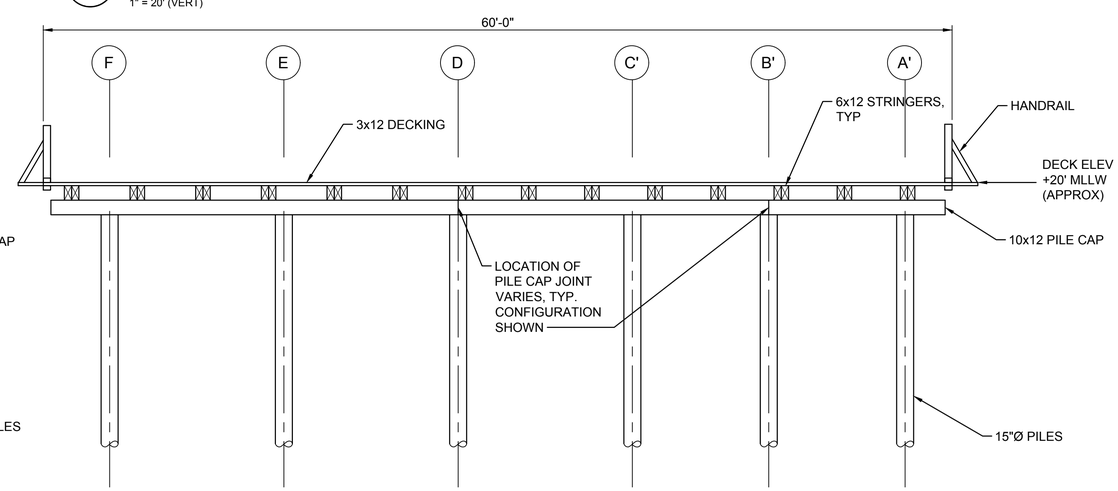

B WHARF HEAD SECTION
SCALE: 1" = 5'

5' 0' 5' 10'
SCALE: 1"=5'

40' 0' 40' 80'
SCALE: 1"=40'

NOTES:

1. SOIL PROFILE IS BASED UPON DRAWING 80-37 BY H.V. ANDERSON DATED MARCH 13, 1981 AND HARDING LAWSON ASSOC. (HLA) SOILS INVESTIGATION DATED MAY 8, 1980.
2. BORINGS (2) WERE DONE BY HLA ON MARCH 5, 1980.
3. GRID LINES HAVE BEEN MODIFIED TO BE SEQUENTIAL AND DIFFER FROM THE ORIGINAL DRAWINGS OF H.V. ANDERSON (NOTE 1) THAT HAD VARIED THE GRID NUMBERING TO INCLUDE PILE BENTS REMAINING FROM THE ORIGINAL PROJECT, WHILE OTHERS HAD BEEN ADDED.
4. THE ELEVATION OF THE WHARF DECK VARIES ALONG ITS LENGTH FROM A HIGH POINT AT THE ABUTMENT AS SHOWN BELOW. THE +20.0 FT MLLW ELEVATION SHOWN IS APPROXIMATE.

BENT	DISTANCE BELOW ABUTMENT (APPROX.)
0 (ABUTMENT)	0
40	2.5'
60	2.0'
74	1.8'

5. A STORM IN EARLY 2023 DAMAGED THE WHARF, SEE SHEETS C-101 AND C-102 FOR STORM DAMAGE PLANS AND DETAILS.

Mark	Description	Date	Appr

CAPITOLA WHARF RESILIENCY AND PUBLIC ACCESS IMPROVEMENT PHASE 2

EXISTING WHARF

Date: 5/19/2023
Rev.
M&N Project No.: 9154-01
Drawing code:
Drawing Scale:
Plot scale: 1:1 (0 SHEET)
Designed by: AC
Cad by: BP
Dwn by: AC
Reviewed by:
Submitted by: MOFFATT & NICHOL

moffatt & nichol
2185 N. CALIFORNIA BLVD.
SUITE 500
WALNUT CREEK, CA 94596

REGISTERED PROFESSIONAL ENGINEER BRADFORD A. PORTER No. 042735 Exp. 3-31-24 CIVIL STATE OF CALIFORNIA
SEAL

Sheet Reference No.
C-100
INDEX: 5 OF 37

File: Q:\WC\9154-01 capitola wharf beach\4_CADD_Active_Wharf_sheet set\9154\01-C-100 , Plotted: 5/19/2023 11:20 AM by ESTRADA, JUSTIN , Saved: 5/19/2023 11:15 AM by JESTRADA

DRAWING SCALES SHOWN BASED ON 22"x34" DRAWING

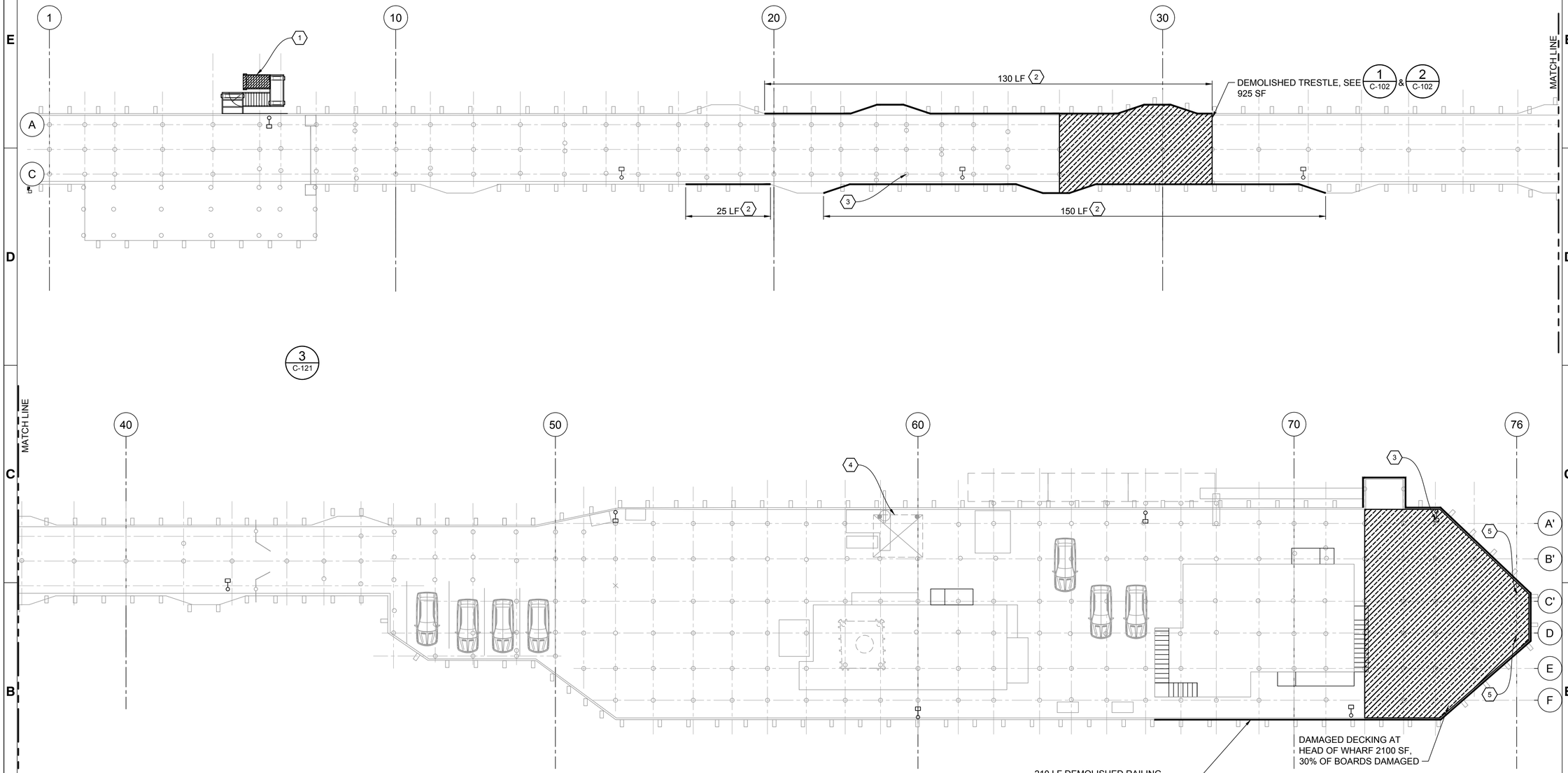

1 - OVERALL WHARF STORM DAMAGE
SCALE: 1" = 15'

KEY NOTES

1. MISSING BOTTOM FLIGHT OF STAIRS - F&I REPLACEMENT BOTTOM FLIGHT OF STAIRS
2. MISSING RAILING - F&I REPLACEMENT RAILING
3. MISSING LIGHT POLES - F&I REPLACEMENT LIGHT POLES
4. REPAIR LANDING - F&I REPLACEMENT DECKING (175 SF), F&I REPLACEMENT STRINGER, AND F&I SS RAILING (50 LF) SIMILAR TO RESTROOM RAILING. SEE 1 C-129
5. DISPLACED PILES - RECONNECT PILES TO PILE CAP AT BENT 76. SEE 4 C-123

NOTES:

1. IN ADDITION TO THE MISSING RAILING, MOST OF THE REMAINING RAILING HAS BEEN DAMAGED TO THE POINT WHERE ALL THE RAILING SHOULD BE REPLACED.

15'-0" 0'-0" 15'-0" 30'-0"
1"=15'

CITY OF CAPITOLA
INCORPORATED 1949

Mark	Description	Date	Appr.

CAPITOLA WHARF RESILIENCY AND PUBLIC ACCESS IMPROVEMENT PHASE 2

OVERALL WHARF STORM DAMAGE

moffatt & nichol
2185 N. CALIFORNIA BLVD.
SUITE 500
WALNUT CREEK, CA 94596

Designed by: JE	Date: 5/19/2023	M&N Project No.: 9154-01	Rev.
Dwn by: JE	Ckd by: BP	Drawing code:	
Reviewed by:		Drawing Scale:	
Submitted by: MOFFATT & NICHOL		Plot scale: 1:1 (D SHEET)	

REGISTERED PROFESSIONAL ENGINEER
BRADFORD A. PORTER
No. 042735
Exp. 3-31-24
CIVIL
STATE OF CALIFORNIA
SEAL

Sheet Reference No.
C-101
INDEX: 6 OF 37

File: Q:\WC\9154-01 capitola wharf beach\4_CADD_Active_Wharf_sheet set\915401-C-101 ; Plotted: 5/19/2023 11:20 AM by: ESTRADA, JUSTIN ; Saved: 5/19/2023 11:15 AM by: JESTRADA

DRAWING SCALES SHOWN BASED ON 22"x34" DRAWING

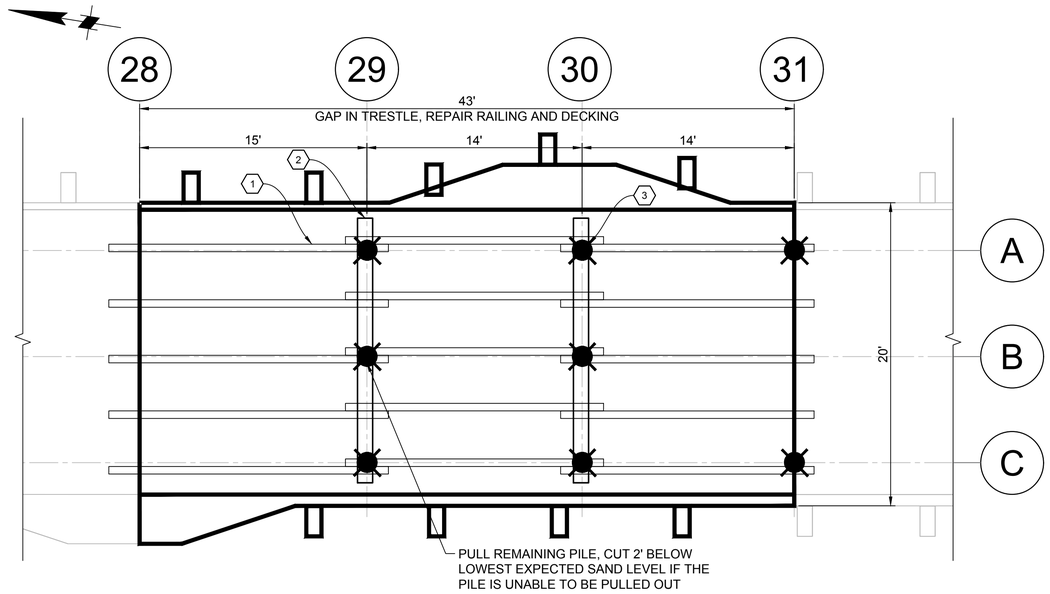

1 / C-101 DETAIL - DEMOLISHED TRESTLE REPAIRS
SCALE: 1" = 5'

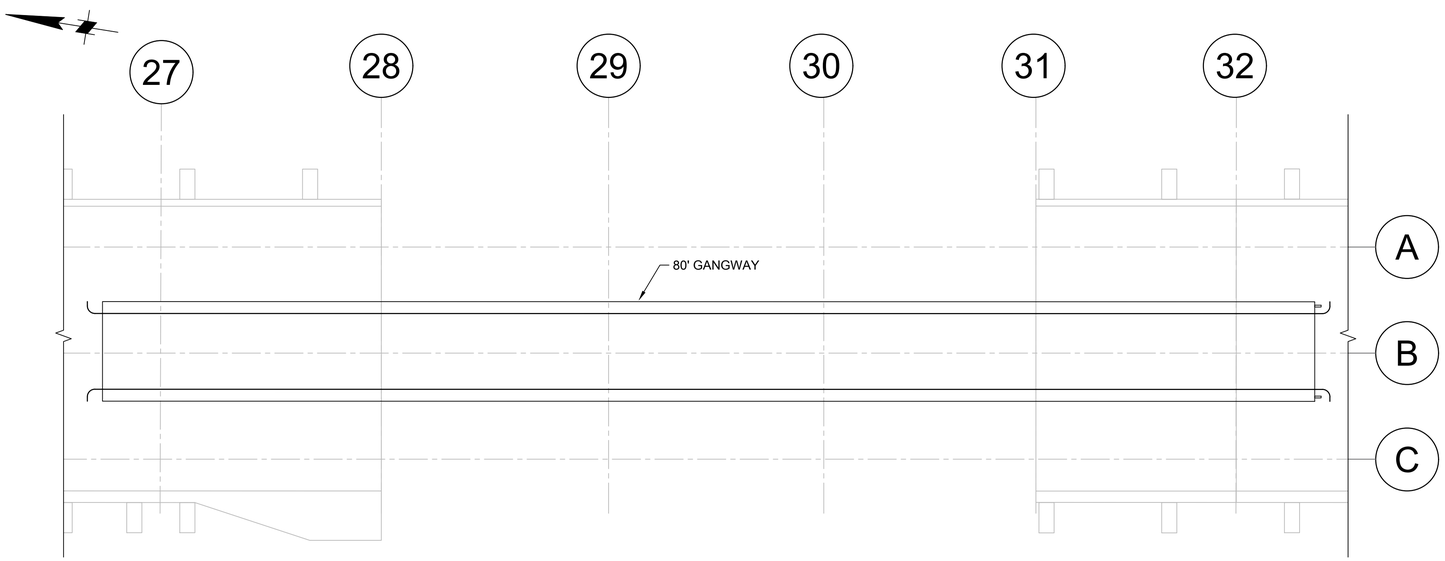

2 / C-101 DETAIL - DEMOLISHED TRESTLE GANGWAY ACCESS
SCALE: 1" = 5'

KEY NOTES

1. CONSTRUCT 6X12 STRINGERS @ 36" OC, TYP
2. CONSTRUCT 10X12 PILE CAP, TYP
3. CONSTRUCT 12" PILE IN PLACE OF MISSING PILE

LEGEND

MISSING PILE

5'-0" 0'-0" 5'-0" 10'-0"
1"=5'

Mark	Description	Date	Appr

CITY OF CAPITOLA
INCORPORATED 1949

CAPITOLA WHARF RESILIENCY AND PUBLIC ACCESS IMPROVEMENT PHASE 2

TRESTLE STORM DAMAGE

Rev:
Date: 5/19/2023
M&N Project No.: 9154-01
Drawing code:
Drawing Scale:
Plot scale: 1:1 (D SHEET)
Designed by: JE
Cad by: BP
Dwn by: JE
Reviewed by:
Submitted by:
MOFFATT & NICHOL

moffatt & nichol
2185 N. CALIFORNIA BLVD.
SUITE 500
WALNUT CREEK, CA 94596

REGISTERED PROFESSIONAL ENGINEER
BRADFORD A. FORKER
No. 042735
Exp. 3-31-24
CIVIL
STATE OF CALIFORNIA
SEAL

Sheet
Reference No.
C-102
INDEX: 7 OF 37

File: Q:\WC\9154-01 capitola wharf beach\4_CADD_Active_Wharf_sheet set\9154-01-C-102 ; Plotted: 5/19/2023 11:20 AM by ESTRADA, JUSTIN ; Saved: 5/19/2023 11:15 AM by JESTRADA

DRAWING SCALES SHOWN BASED ON 22"x34" DRAWING

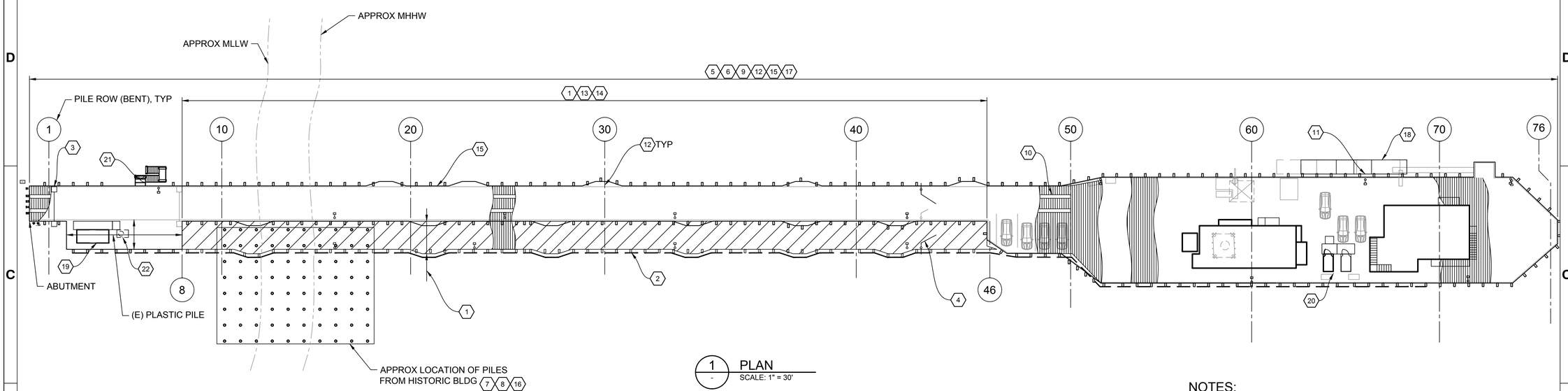

1 - PLAN
SCALE: 1" = 30'

KEYNOTES:

1. WIDEN EXISTING WHARF TRESTLE. SEE 1/C-104
2. REMOVE (E) UTILITY LINES AND F&I (N) UTILITY LINES. SEE 1/U-001 FOR (E) UTILITY LINES & 1/U-002 & 1/U-004 FOR (N) UTILITY LINES
3. RELOCATE ENTRY GATE TO START OF TIMBER TRESTLE. SEE PHOTO 2 ON SHEET G-003.
4. DEMOLISH (E) SECURITY GATE AND F&I (N) SECURITY GATE. SEE 1/C-124
5. F&I FRP PILES IN PLACE OF OR ADJACENT TO DAMAGED PILES AND REPAIR PILES, AS SHOWN ON SHEET 1/C-105
6. REPLACE DAMAGED STRINGERS AND PILE CAPS IDENTIFIED IN FIELD
7. REMOVE EXISTING PILE STUB REMNANTS FROM HISTORIC BLDG. PILE STUBS ARE EXPOSED WHEN BEACH SAND IS LOW. REMOVE THEM FOR THEIR ENTIRE LENGTH WHERE POSSIBLE. BID ALLOWANCE - 10 PILES
8. PILE STUB REMNANTS FROM HISTORIC BLDG THAT CANNOT BE REMOVED SHALL BE CUT OFF 2 FT BELOW LOWEST EXPECTED SAND LEVEL. BID ALLOWANCE - 20 PILES
9. DEMOLISH (E) DECKING AND F&I (N) DECKING OUTSIDE BUILDING FOOTPRINTS
10. F&I VEHICLE RUNNERS ON TOP OF DECKING FROM ABUTMENT TO BENT 50
11. F&I FRP PILES OVER (E) FLOATING DOCK STEEL GUIDE PILES. SEE 1/C-105
12. F&I (N) BENCHES AND RELOCATE (E) BENCHES
13. RELOCATE EXISTING LIGHTING, 3 LOCATIONS
14. REPLACE (E) TIMBER PILE T-STRAPS AND INSTALL T-STRAPS WHERE THERE IS A PIN OR STRAP CONNECTION ALONG (E) TRESTLE
15. REPLACE HANDRAIL THROUGHOUT. SEE NOTE 2.
16. EXPLORATORY DIGGING. SEE NOTE 1.
17. F&I BIRD SPIKES TO PROVIDE FULL COVERAGE OF PILE CAP BETWEEN STRINGERS
18. F&I FLOATING DOCK. SEE 1/C-125
19. F&I RESTROOM AT BASE OF WHARF. SEE 1/C-126
20. F&I RESTROOM AT HEAD OF WHARF. SEE 2/C-126
21. F&I STAIR ACCESS GATE FOR PEDESTRIAN ACCESS USING EITHER ALUMINUM OR GALVANIZED STEEL
22. F&I SEWAGE EJECTOR PUMP, SEE 1/U-003

LEGEND:

- WIDEN WHARF
- REPLACE DECKING
- LIGHT

NOTES:

1. A MINIMUM OF 5' OF EXPLORATORY DIGGING IS REQUIRED WITHIN THE FOOTPRINT OF THE HISTORIC BUILDING IN SEARCH OF HISTORIC PILE STUBS. DIGGING SHALL OCCUR DURING THE SEASONAL LOW LEVEL OF SAND, TYPICALLY IN THE MONTHS OF NOVEMBER TO MAY.
2. MEMORIAL PLAQUES SHALL BE MAINTAINED IN THEIR EXISTING LOCATIONS.

30' 0' 30' 60'
SCALE: 1"=30'

CITY OF CAPITOLA
INCORPORATED 1949

Mark	Description	Date	Appr

CAPITOLA WHARF RESILIENCY AND PUBLIC ACCESS IMPROVEMENT PHASE 2

OVERALL WHARF

Date: 5/19/2023
Rev.
M&N Project No.: 9154-01
Drawing code:
Drawing Scale:
Plot scale: 1:1 (D SHEET)
Designed by: AC
Dwn by: AC
Cad by: BP
Reviewed by:
Submitted by: MOFFATT & NICHOL

moffatt & nichol
2185 N. CALIFORNIA BLVD.
SUITE 500
WALNUT CREEK, CA 94596

REGISTERED PROFESSIONAL ENGINEER
BRADFORD A. PORTER
No. 042735
Exp. 3-31-24
CIVIL
STATE OF CALIFORNIA
SEAL

Sheet Reference No.
C-103
INDEX: 8 OF 37

File: Q:\WC\9154-01 capitola wharf beach\4_CADD_Active_Wharf_sheet set\9154\01-C-103 ; Plotted: 5/19/2023 11:21 AM by ESTRADA, JUSTIN ; Saved: 5/19/2023 11:15 AM by JESTRADA

DRAWING SCALES SHOWN BASED ON 22"x34" DRAWING

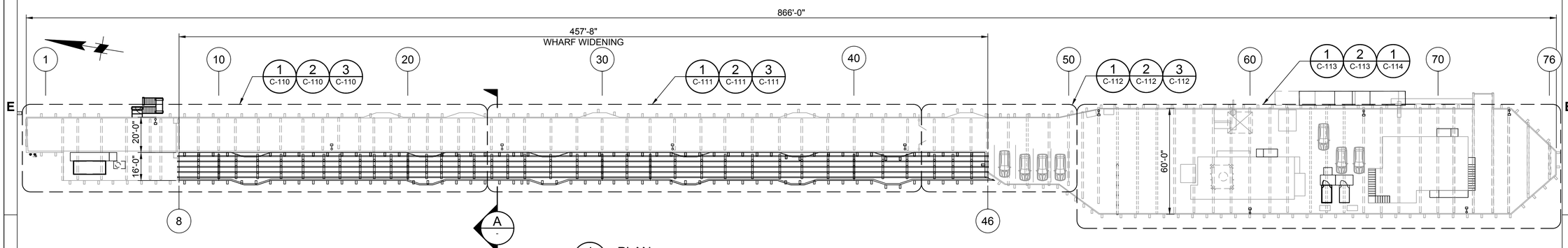

1 C-103 PLAN
SCALE: 1" = 30'

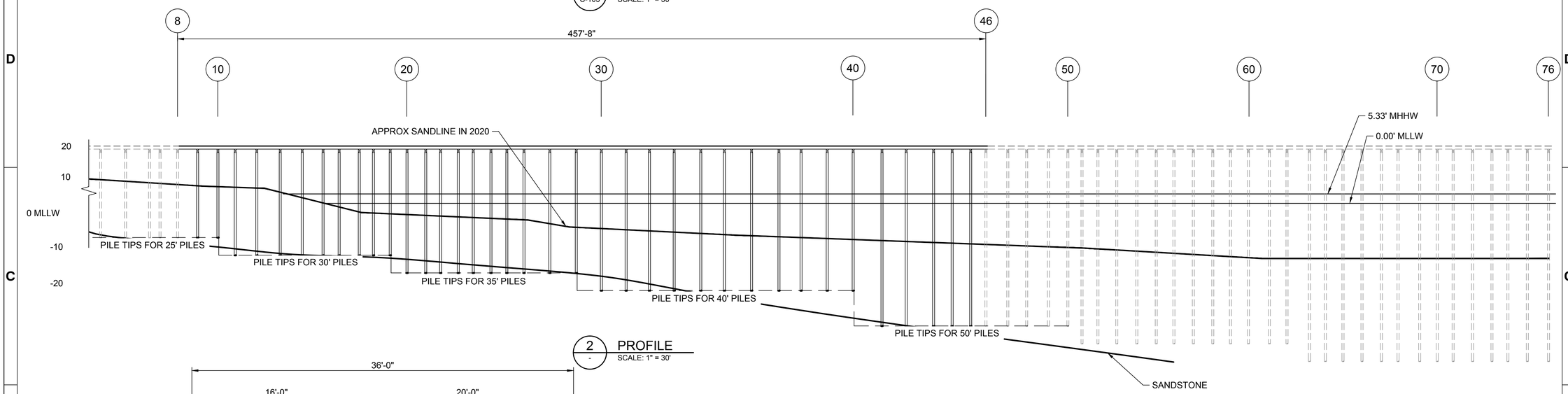

2 - PROFILE
SCALE: 1" = 30'

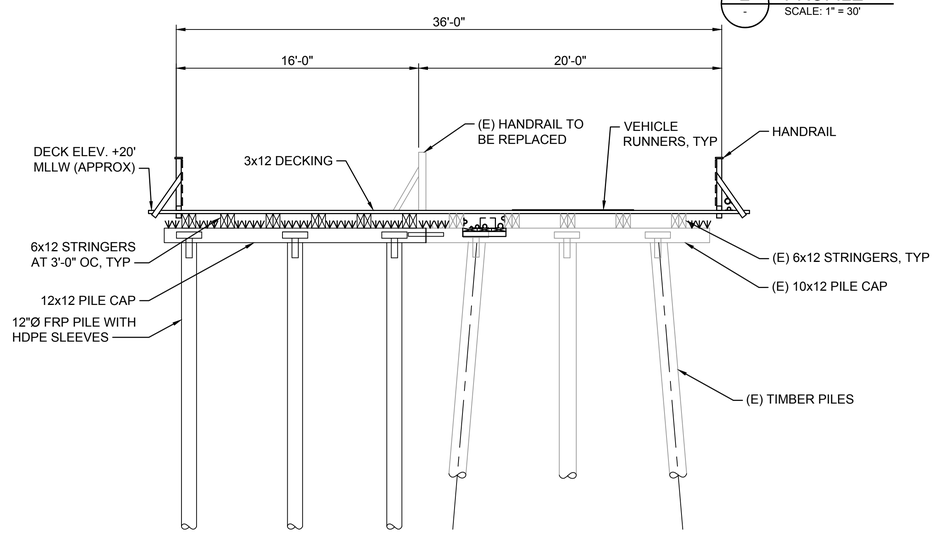

A - SECTION
SCALE: 1" = 5'

5' 0' 5' 10'
SCALE: 1"=5'

30' 0' 30' 60'
SCALE: 1"=30'

CITY OF CAPITOLA
INCORPORATED 1949

Mark	Description	Date	Appr

CAPITOLA WHARF RESILIENCY AND PUBLIC ACCESS IMPROVEMENT PHASE 2

WIDENING WHARF PLAN AND SECTION

moffatt & nichol
2185 N. CALIFORNIA BLVD.
SUITE 500
WALNUT CREEK, CA 94596

Designed by: AC
Dwn by: AC
Cad by: BP
Reviewed by:
Submitted by: MOFFATT & NICHOL
Date: 5/19/2023
Rev.
M&N Project No.: 9154-01
Drawing code:
Drawing Scale:
Plot scale: 1:1 (D SHEET)

REGISTERED PROFESSIONAL ENGINEER
BRADFORD A. PUMPER
No. 042735
Exp. 3-31-24
CIVIL
STATE OF CALIFORNIA
SEAL

Sheet Reference No.
C-104
INDEX: 9 OF 37

File: Q:\WC\9154-01 capitola wharf beach\4_CADD_Active_Wharf_sheet set\915401-C-104 , Plotted: 5/19/2023 11:21 AM by ESTRADA, JUSTIN , Saved: 5/19/2023 11:15 AM by JESTRADA

DRAWING SCALES SHOWN BASED ON 22"x34" DRAWING

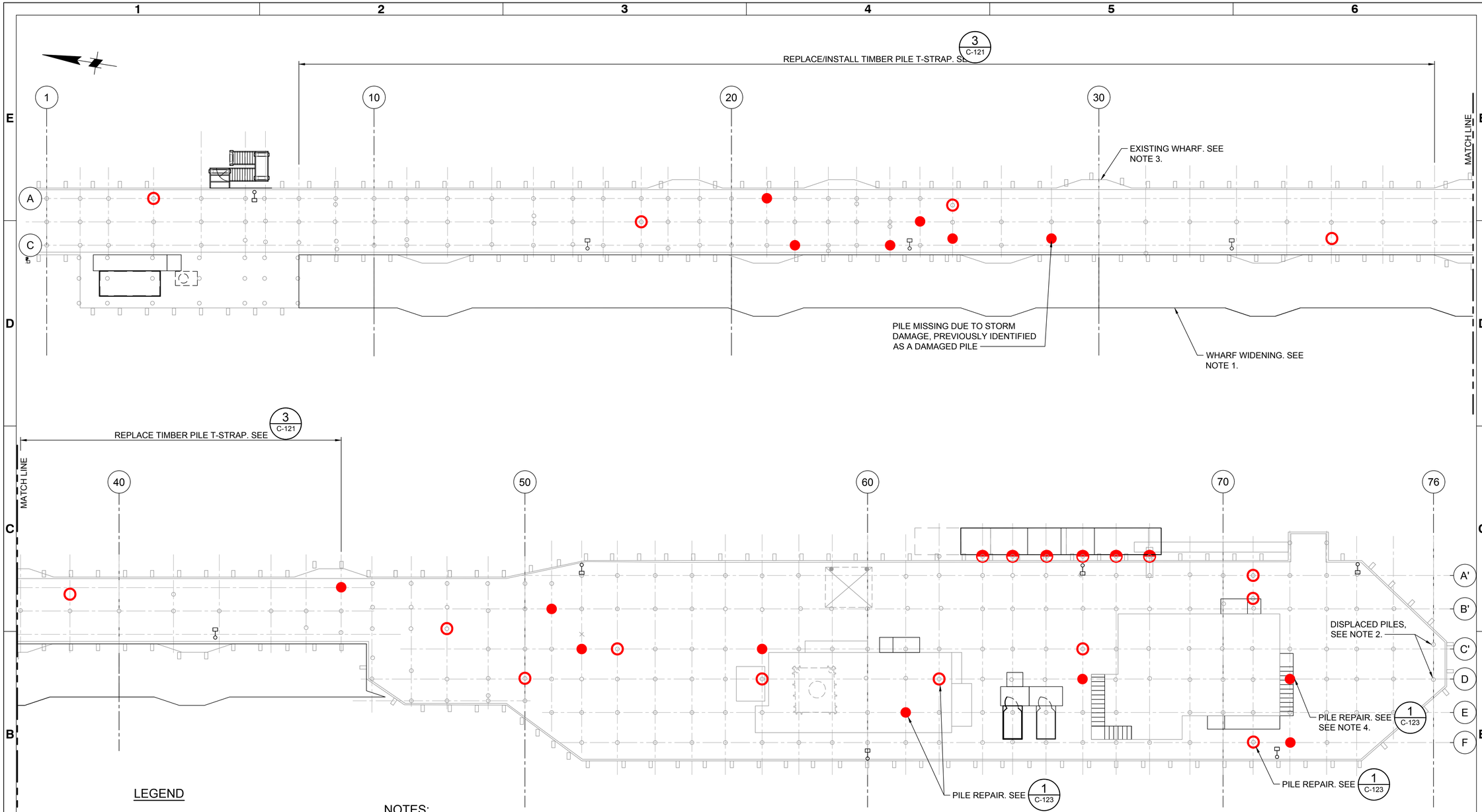

LEGEND

- F&I 12"Ø FRP PILE IN PLACE OF OR ADJACENT TO DAMAGED TIMBER PILE, SEE E C-122. REPAIR PILES BELOW BUILDINGS AS INDICATED
- F&I 10"Ø FRP OVER (E) STEEL PILE, SEE F C-122
- ADD ALTERNATE 1 - F&I 12"Ø FRP PILE ADJACENT TO DAMAGED TIMBER PILE, SEE E C-122. REPAIR PILES BELOW BUILDINGS AS INDICATED
- MISSING PILE

NOTES:

1. WHARF WIDENING PILES ARE NOT SHOWN.
2. RECONNECT PILES ON BENT 76 TO PILE CAP WITH T-STRAPS. PILES WERE OFFSET FROM PILE CAP IN STORM WAVES. PULL BACK INTO POSITION AND RECONNECT TO PILE CAP WITH T-STRAPS.
3. SEE SHEETS C-101 AND C-102 FOR STORM DAMAGE PILE REPLACEMENTS.
4. PILE 72D CAN BE REPAIRED AS INDICATED OR AN FRP PILE CAN BE INSTALLED ADJACENT TO THE PILE.

1 C-103 **PILE PLAN**
SCALE: 1" = 15'

2'-0" 0'-0" 1'-0" 2'-0"
SCALE: 3/4"=1'-0"

CITY OF CAPITOLA — INCORPORATED 1949

Mark	Description	Date	Appr

CAPITOLA WHARF RESILIENCY AND PUBLIC ACCESS IMPROVEMENT PHASE 2

WHARF PILE REPAIRS

Rev:
Date: 5/19/2023
M&N Project No.: 9154-01
Drawing code:
Drawing Scale:
Plot scale: 1:1 (D SHEET)
Designed by: AC
Cad by: BP
Dwn by: AC
Reviewed by:
Submitted by: MOFFATT & NICHOL

moffatt & nichol
2185 N. CALIFORNIA BLVD.
SUITE 500
WALNUT CREEK, CA 94596

REGISTERED PROFESSIONAL ENGINEER — BRADFORD A. POWELL — No. 042735 — Exp. 3-31-24 — CIVIL — STATE OF CALIFORNIA
SEAL

Sheet Reference No.
C-105
INDEX: 10 OF 37

File: Q:\WC\9154-01 capitola wharf beach\4_CADD_Active_Wharf_sheet set\9154-01-C-105 ; Plotted: 5/19/2023 11:21 AM by: ESTRADA, JUSTIN ; Saved: 5/19/2023 11:15 AM by: JESTRADA

DRAWING SCALES SHOWN BASED ON 22"x34" DRAWING

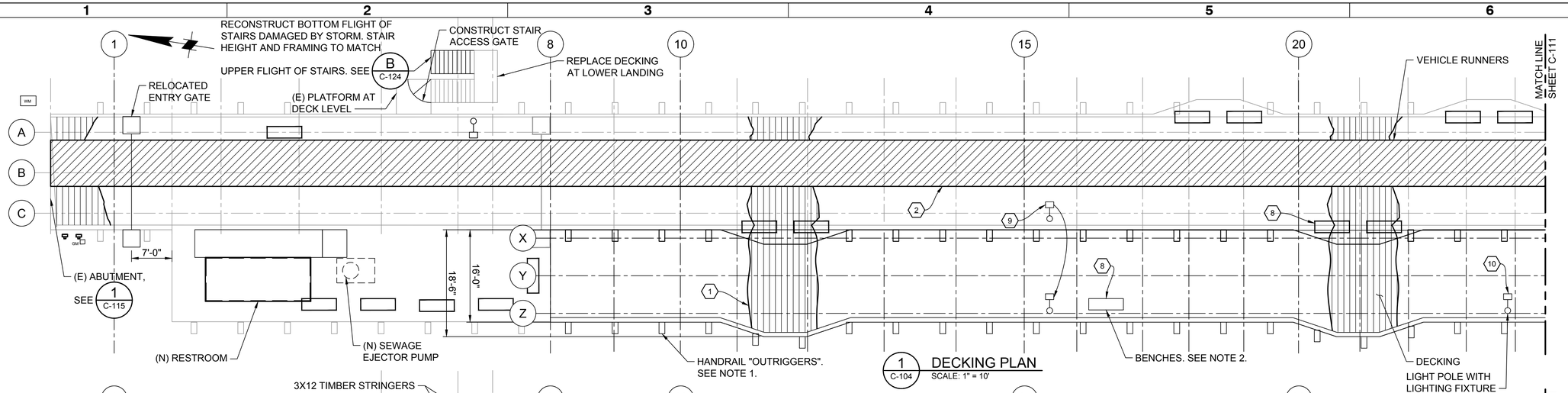

1 C-104 DECKING PLAN
SCALE: 1" = 10'

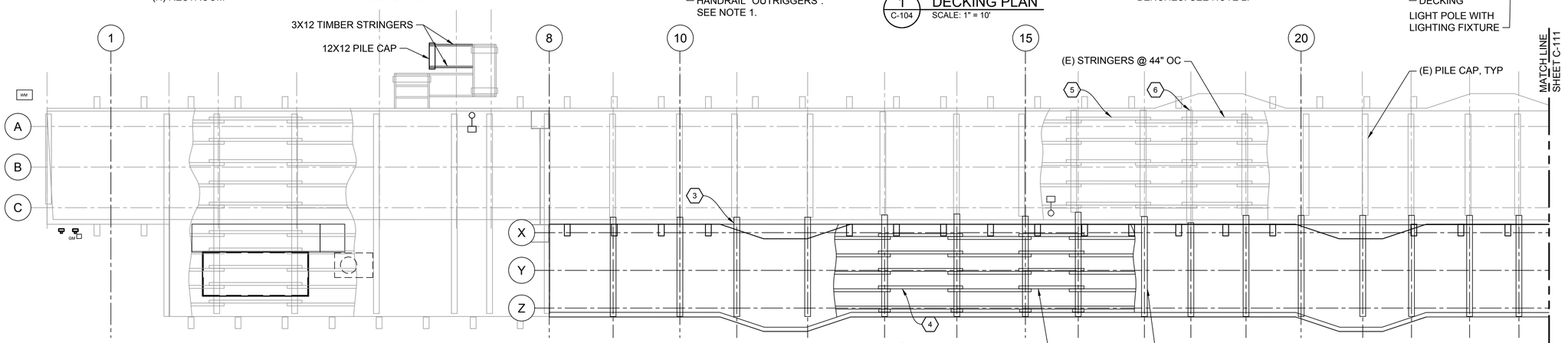

2 C-104 FRAMING PLAN
SCALE: 1" = 10'

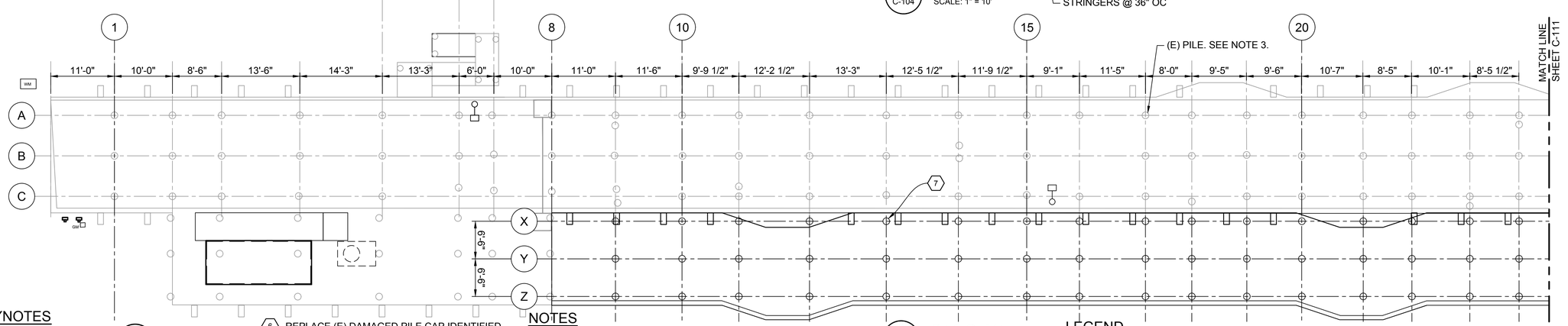

3 C-104 PILE PLAN
SCALE: 1" = 10'

KEYNOTES

1. F&I 3X12 DECKING, SEE 1 C-122
2. F&I VEHICLE RUNNERS ON TOP OF DECKING
3. F&I 12X12 PILE CAP
4. F&I 6X12 STRINGERS @ 3'-0" OC
5. REPLACE (E) DAMAGED STRINGERS IDENTIFIED IN THE FIELD - ASSUME 20 STRINGERS REQUIRE REPLACEMENT
6. REPLACE (E) DAMAGED PILE CAP IDENTIFIED IN FIELD WITH (N) 12X12 PILE CAP - ASSUME 5 PILE CAPS REQUIRE REPLACEMENT
7. F&I FRP PILE
8. F&I (N) BENCHES AND RELOCATE (E) BENCHES, SEE NOTE 4. SEE DETAIL 5 C-122
9. RELOCATE LIGHT POLES
10. INSTALL LIGHT POLES

NOTES

1. HANDRAIL "OUTRIGGERS" SHALL BE DECKING PLANKS EXTENDING 2' BEYOND THE WHARF EDGE. THEY SHALL BE LOCATED ACROSS FROM (E) "OUTRIGGERS" AND AT WIDENED WHARF ENDS.
2. 6 (N) BENCHES SHALL BE INSTALLED. BENCHES SHALL BE LOCATED AS DIRECTED BY THE CITY'S REPRESENTATIVE.
3. PILE REPAIRS AND REPLACEMENTS UNDERNEATH (E) WHARF ARE NOT SHOWN. SEE SHEET C-105.
4. (E) BENCHES ALONG THE WEST SIDE OF THE (E) TRESTLE SHALL BE MOVED TO THE WEST SIDE OF THE (N) WIDENED TRESTLE.

LEGEND

- FRP PILE
- (E) TIMBER PILE. SEE NOTE 3.

10' 0' 10' 20'
SCALE: 1"=10'

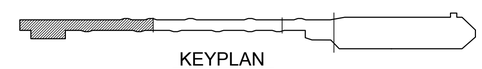

KEYPLAN
SCALE: NTS

CITY OF CAPITOLA
INCORPORATED 1949

Mark	Description	Date	Appr

CAPITOLA WHARF RESILIENCY AND PUBLIC ACCESS IMPROVEMENT PHASE 2

DECK, FRAMING AND PILE PLANS (BENTS 0-24)

Designed by: AC
Dwn by: AC
Ckd by: BP
Reviewed by:
Submitted by: MOFFATT & NICHOL
Date: 5/19/2023
M&N Project No.: 91954-01
Drawing code:
Drawing Scale:
Plot scale: 1:1 (D SHEET)
Rev.

moffatt & nichol
2185 N. CALIFORNIA BLVD.
SUITE 500
WALNUT CREEK, CA 94596

REGISTERED PROFESSIONAL ENGINEER
BRADFORD A. POLLEREDER
No. 042795
Exp. 3-31-24
CIVIL
STATE OF CALIFORNIA
SEAL

Sheet Reference No.
C-110
INDEX: 11 OF 37

File: Q:\WC\91954-01 capitola wharf beach\4_CADD_Active_Wharf_sheet set\91540\1-C-110 ; Plotted: 5/19/2023 11:21 AM by ESTRADA, JUSTIN ; Saved: 5/19/2023 11:15 AM by JESTRADA

DRAWING SCALES SHOWN BASED ON 22"x34" DRAWING

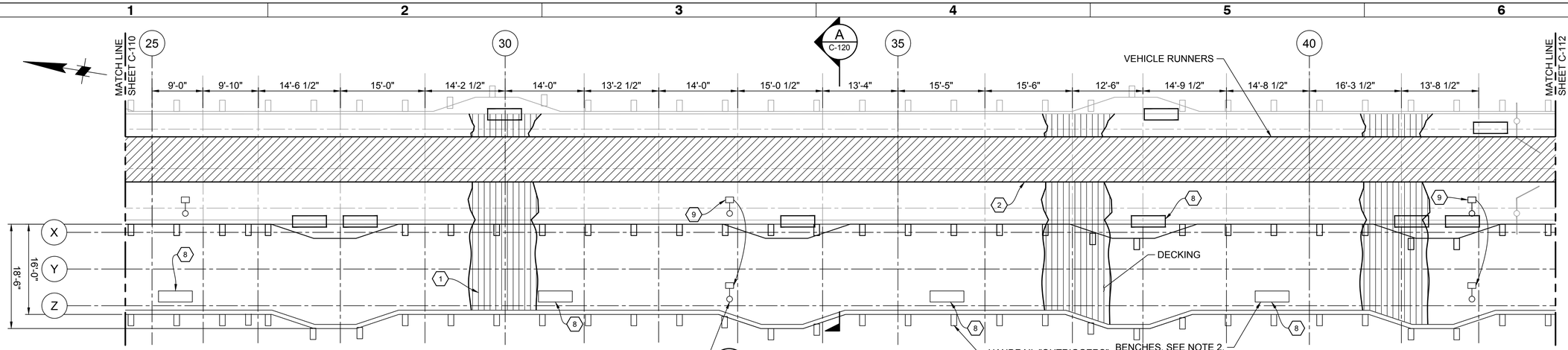

1 C-104 DECKING PLAN
SCALE: 1" = 10'

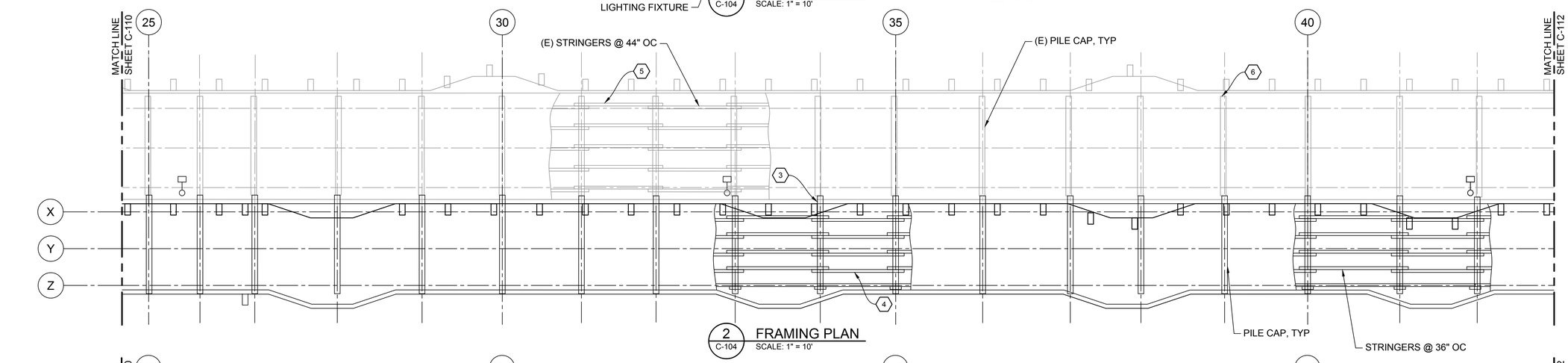

2 C-104 FRAMING PLAN
SCALE: 1" = 10'

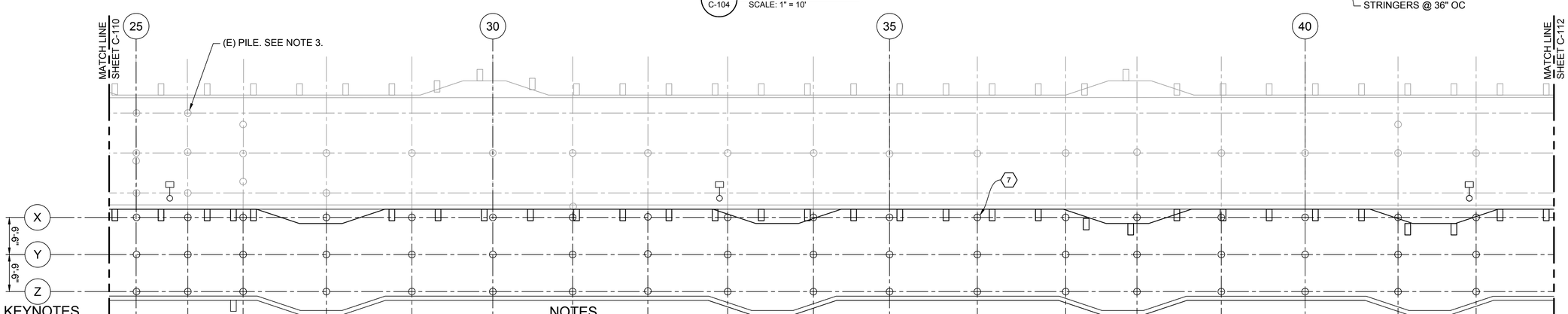

3 C-104 PILE PLAN
SCALE: 1" = 10'

KEYNOTES

1. F&I 3X12 DECKING. SEE 1 C-122
2. F&I VEHICLE RUNNERS ON TOP OF DECKING.
3. F&I 12X12 PILE CAP
4. F&I 6X12 STRINGERS @ 3'-0" OC
5. REPLACE (E) DAMAGED STRINGERS IDENTIFIED IN THE FIELD - ASSUME 20 STRINGERS REQUIRE REPLACEMENT
6. REPLACE (E) DAMAGED PILE CAP IDENTIFIED IN FIELD WITH (N) 12X12 PILE CAP - ASSUME 5 PILE CAPS REQUIRE REPLACEMENT
7. F&I FRP PILE
8. F&I (N) BENCHES AND RELOCATE (E) BENCHES, SEE NOTE 4. SEE DETAIL 5 C-122
9. RELOCATE LIGHT POLES
10. NOT USED

NOTES

1. HANDRAIL "OUTRIGGERS" SHALL BE DECKING PLANKS EXTENDING 2' BEYOND THE WHARF EDGE. THEY SHALL BE LOCATED ACROSS FROM (E) "OUTRIGGERS" AND AT WIDENED WHARF ENDS.
2. 6 (N) BENCHES SHALL BE INSTALLED. BENCHES SHALL BE LOCATED AS DIRECTED BY THE CITY'S REPRESENTATIVE.
3. PILE REPAIRS AND REPLACEMENTS UNDERNEATH (E) WHARF ARE NOT SHOWN. SEE SHEET C-105.
4. (E) BENCHES ALONG THE WEST SIDE OF THE (E) TRESTLE SHALL BE MOVED TO THE WEST SIDE OF THE (N) TRESTLE.

LEGEND

- FRP PILE
- (E) TIMBER PILE. SEE NOTE 3.

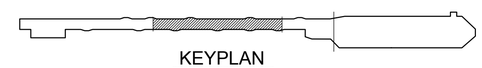

KEYPLAN
SCALE: NTS

10' 0' 10' 20'
SCALE: 1"=10'

DRAWING SCALES SHOWN BASED ON 22"x34" DRAWING

CITY OF CAPITOLA
INCORPORATED 1949

Mark	Description	Date	Appr.

CAPITOLA WHARF RESILIENCY AND PUBLIC ACCESS IMPROVEMENT PHASE 2

DECK, FRAMING AND PILE PLANS (BENTS 24-42)

moffatt & nichol
2185 N. CALIFORNIA BLVD.
SUITE 500
WALNUT CREEK, CA 94596

Designed by: AC
Date: 5/19/2023
Rev.
Dwn by: AC
Ckd by: BP
M&N Project No.: 9154-01
Drawing code:
Reviewed by:
Submitted by: MOFFATT & NICHOL
Drawing Scale: 1:1 (D SHEET)
Plot scale:

REGISTERED PROFESSIONAL ENGINEER
BRADFORD A. PORTER
No. 042795
Exp. 3-31-24
CIVIL
STATE OF CALIFORNIA
SEAL

Sheet Reference No.
C-111
INDEX: 12 OF 37

File: Q:\WC\9154-01 capitola wharf beach\4_CADD_Active_Wharf_sheet set\9154-01-C-111 ; Plotted: 5/19/2023 11:21 AM by: ESTRADA, JUSTIN ; Saved: 5/19/2023 11:16 AM by: JESTRADA

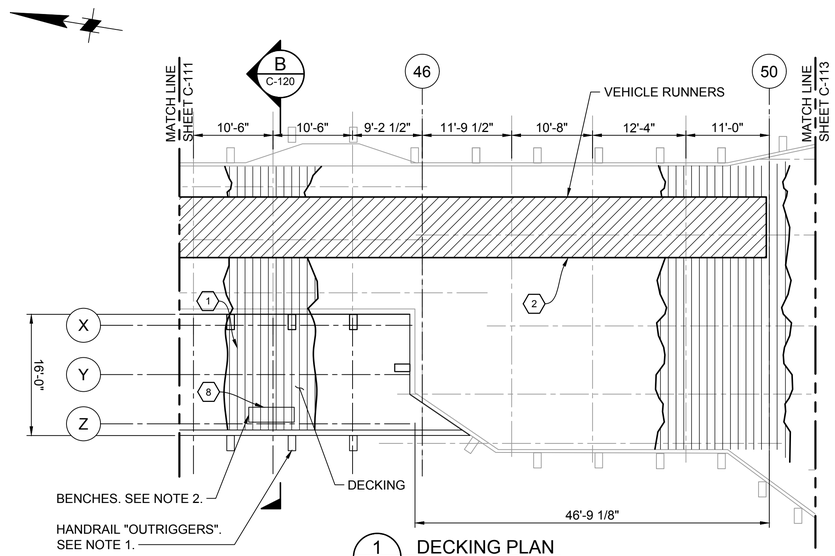

1 C-104 DECKING PLAN
SCALE: 1" = 10'

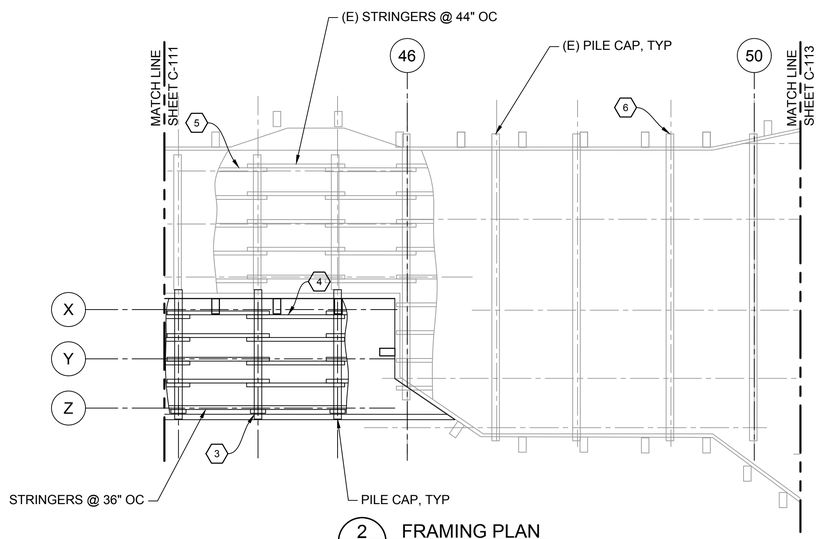

2 C-104 FRAMING PLAN
SCALE: 1" = 10'

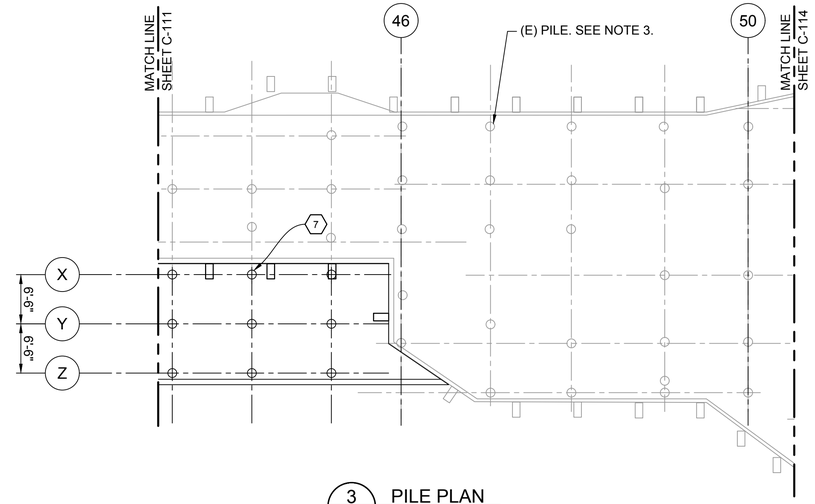

3 C-104 PILE PLAN
SCALE: 1" = 10'

KEYNOTES

1. F&I 3X12 DECKING. SEE 1 / C-122
2. F&I VEHICLE RUNNERS ON TOP OF DECKING.
3. F&I 12X12 PILE CAP
4. F&I 6X12 STRINGERS @ 3'-0" OC
5. REPLACE (E) DAMAGED STRINGERS IDENTIFIED IN THE FIELD - ASSUME 20 STRINGERS REQUIRE REPLACEMENT
6. REPLACE (E) DAMAGED PILE CAP IDENTIFIED IN FIELD WITH (N) 12X12 PILE CAP - ASSUME 5 PILE CAPS REQUIRE REPLACEMENT
7. F&I FRP PILE
8. F&I (N) BENCHES AND RELOCATE (E) BENCHES, SEE NOTE 4. SEE DETAIL 5 / C-122
9. NOT USED
10. NOT USED

NOTES

1. HANDRAIL "OUTRIGGERS" SHALL BE DECKING PLANKS EXTENDING 2' BEYOND THE WHARF EDGE. THEY SHALL BE LOCATED ACROSS FROM (E) "OUTRIGGERS" AND AT WIDENED WHARF ENDS.
2. 6 (N) BENCHES SHALL BE INSTALLED. BENCHES SHALL BE LOCATED AS DIRECTED BY THE CITY'S REPRESENTATIVE.
3. PILE REPAIRS AND REPLACEMENTS UNDERNEATH (E) WHARF ARE NOT SHOWN. SEE SHEET C-105.
4. (E) BENCHES ALONG THE WEST SIDE OF THE (E) TRESTLE SHALL BE MOVED TO THE WEST SIDE OF THE (N) TRESTLE.

LEGEND

- FRP PILE
- (E) TIMBER PILE. SEE NOTE 3.

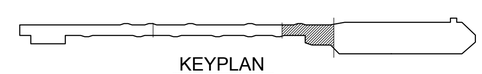

KEYPLAN
SCALE: NTS

10' 0' 10' 20'
SCALE: 1"=10'

Mark	Description	Date	Appr.

CITY OF CAPITOLA
INCORPORATED 1949

CAPITOLA WHARF RESILIENCY AND PUBLIC ACCESS IMPROVEMENT PHASE 2

DECK, FRAMING AND PILE PLANS (BENTS 42-51)

Designed by: AC
Dwn by: AC
Ckd by: BP
Reviewed by:
Submitted by: MOFFATT & NICHOL
Date: 5/19/2023
Rev.
M&N Project No.: 9154-01
Drawing code:
Drawing Scale:
Plot scale: 1:1 (D SHEET)

moffatt & nichol
2185 N. CALIFORNIA BLVD.
SUITE 500
WALNUT CREEK, CA 94596

REGISTERED PROFESSIONAL ENGINEER
BRADFORD A. PORTER
No. 042735
Exp. 3-31-24
CIVIL
STATE OF CALIFORNIA
SEAL

Sheet Reference No.
C-112
INDEX: 13 OF 37

File: Q:\WC\9154-01 capitola wharf beach\4_CADD_Active_Wharf_sheet set\9154\01-C-112 ; Plotted: 5/19/2023 11:21 AM by: ESTRADA, JUSTIN ; Saved: 5/19/2023 11:16 AM by: JESTRADA

DRAWING SCALES SHOWN BASED ON 22"x34" DRAWING

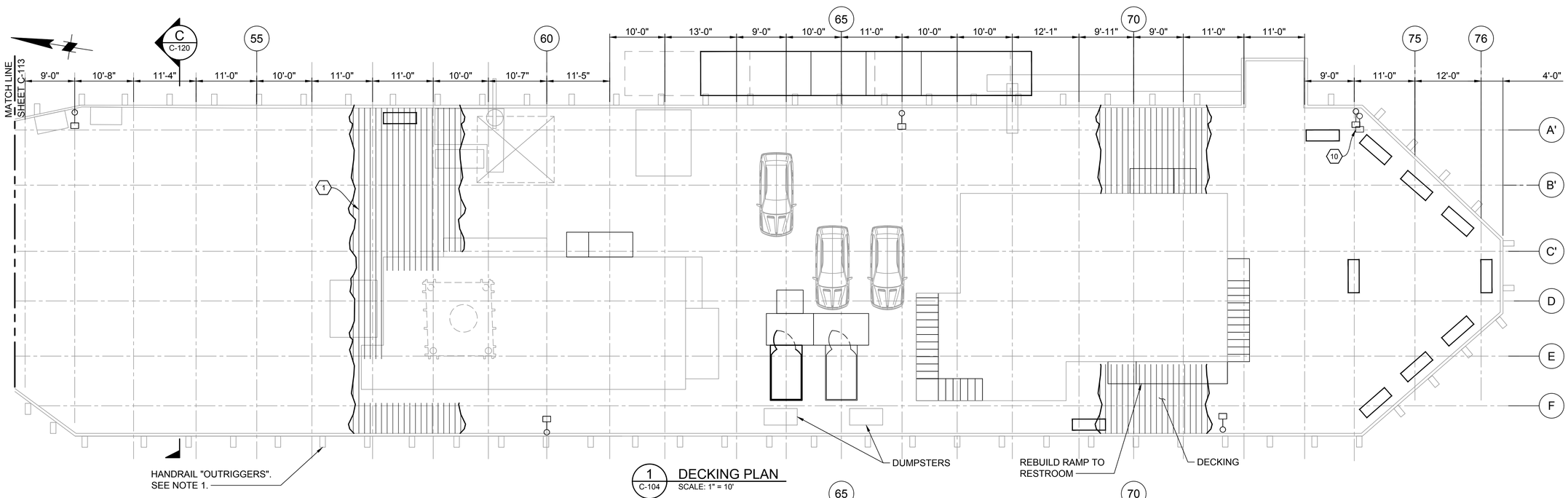

1 C-104 DECKING PLAN
SCALE: 1" = 10'

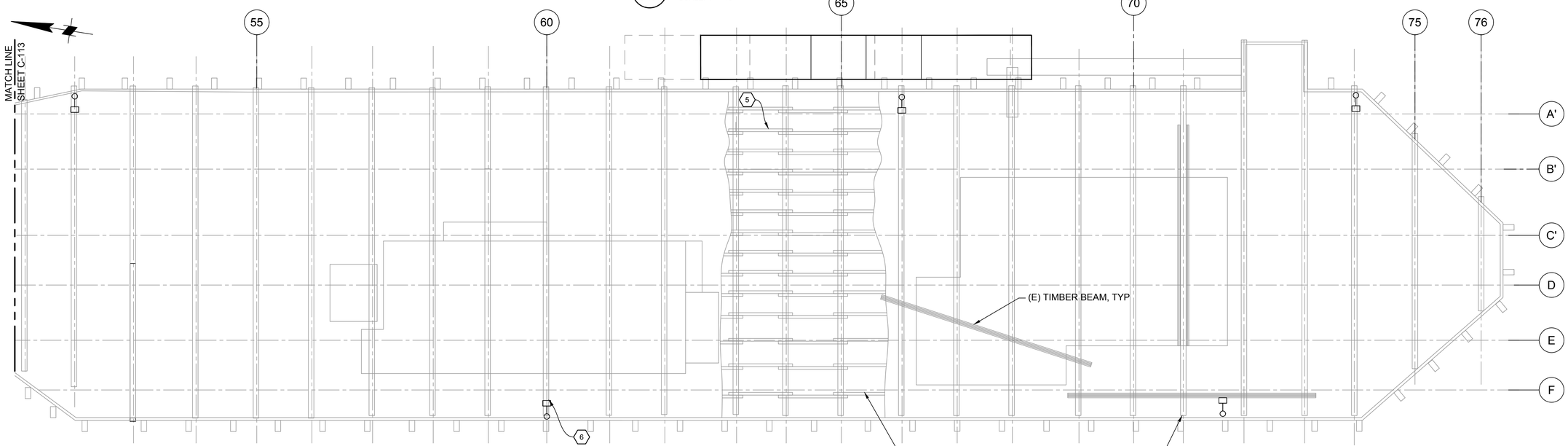

2 C-104 FRAMING PLAN
SCALE: 1" = 10'

KEYNOTES

1. F&I 3X12 DECKING. SEE 1 / C-122
2. NOT USED
3. NOT USED
4. NOT USED
5. REPLACE (E) DAMAGED STRINGERS IDENTIFIED IN THE FIELD - ASSUME 20 STRINGERS REQUIRE REPLACEMENT
6. REPLACE (E) DAMAGED PILE CAP IDENTIFIED IN FIELD WITH (N) 12X12 PILE CAP - ASSUME 5 PILE CAPS REQUIRE REPLACEMENT
7. NOT USED
8. F&I (N) BENCHES AND RELOCATE (E) BENCHES, SEE NOTE 4. SEE DETAIL 5 / C-122
9. NOT USED
10. INSTALL LIGHT POLES

NOTES

1. HANDRAIL "OUTRIGGERS" SHALL BE DECKING PLANKS EXTENDING 2' BEYOND THE WHARF EDGE. THEY SHALL BE LOCATED ACROSS FROM (E) "OUTRIGGERS" AND AT WIDENED WHARF ENDS.
2. 6 (N) BENCHES SHALL BE INSTALLED. BENCHES SHALL BE LOCATED AS DIRECTED BY THE CITY'S REPRESENTATIVE.
3. PILE REPAIRS AND REPLACEMENTS UNDERNEATH (E) WHARF ARE NOT SHOWN. SEE SHEET C-105.
4. (E) BENCHES ALONG THE WEST SIDE OF THE (E) TRESTLE SHALL BE MOVED TO THE WEST SIDE OF THE (N) TRESTLE.

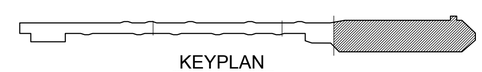

KEYPLAN
SCALE: NTS

10' 0' 10' 20'
SCALE: 1"=10'

CITY OF CAPITOLA
INCORPORATED 1949

Mark	Description	Date	Appr

CAPITOLA WHARF RESILIENCY AND PUBLIC ACCESS IMPROVEMENT PHASE 2

DECK AND FRAMING PLANS (BENTS 51-76)

moffatt & nichol
2185 N. CALIFORNIA BLVD.
SUITE 500
WALNUT CREEK, CA 94596

Designed by: AC
Dwn by: AC
Ckd by: BP
Reviewed by:
Submitted by: MOFFATT & NICHOL
Date: 5/19/2023
Rev.
M&N Project No.: 9154-01
Drawing code:
Drawing Scale:
Plot scale: 1:1 (D SHEET)

REGISTERED PROFESSIONAL ENGINEER
BRADFORD A. FOSTER
No. 042795
Exp. 3-31-24
CIVIL
STATE OF CALIFORNIA
SEAL

Sheet Reference No.
C-113
INDEX: 14 OF 37

File: Q:\WC\9154-01 capitola wharf beach\4_CADD_Active_Wharf_sheet set\9154\01-C-113 ; Plotted: 5/19/2023 11:21 AM by: ESTRADA, JUSTIN ; Saved: 5/19/2023 11:16 AM by: JESTRADA

DRAWING SCALES SHOWN BASED ON 22"x34" DRAWING

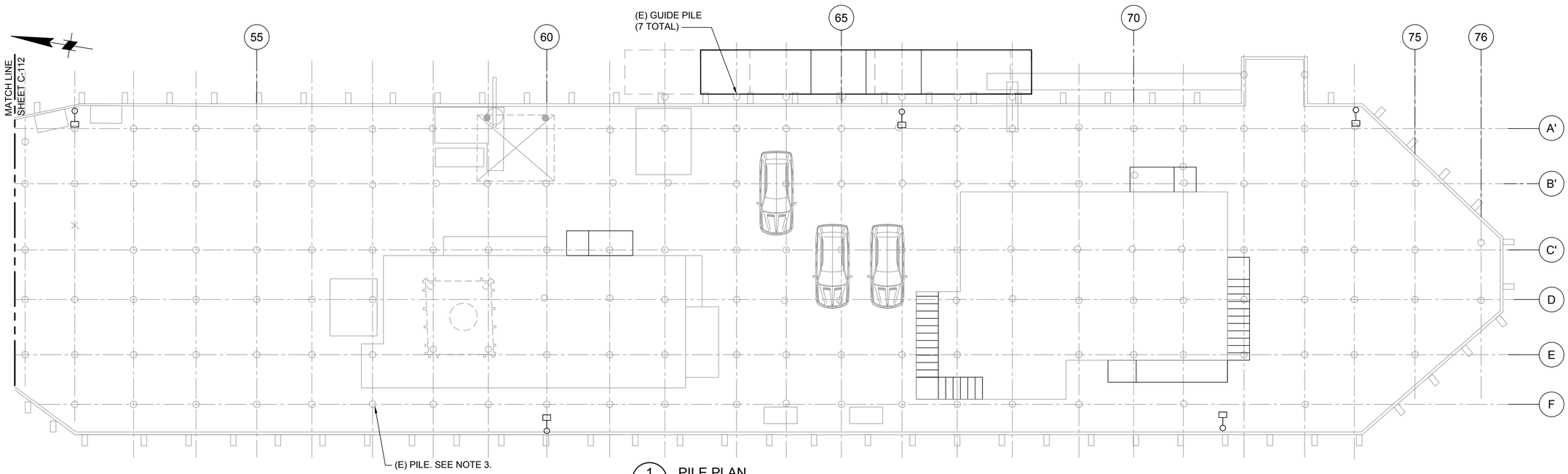

1 C-104 PILE PLAN
SCALE: 1" = 10'

KEYNOTES

1. NOT USED
2. NOT USED
3. NOT USED
4. NOT USED
5. NOT USED
6. NOT USED
7. NOT USED
8. NOT USED
9. NOT USED

NOTES

1. NOT USED.
2. NOT USED.
3. PILE REPAIRS AND REPLACEMENTS UNDERNEATH (E) WHARF ARE NOT SHOWN. SEE SHEET C-105.
4. NOT USED.

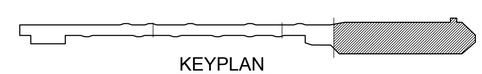

KEYPLAN
SCALE: NTS

10' 0' 10' 20'
SCALE: 1"=10'

Mark	Description	Date	Appr

CAPITOLA WHARF
RESILIENCY AND PUBLIC ACCESS
IMPROVEMENT PHASE 2

PILE PLAN (BENTS 51-76)

moffatt & nichol
2185 N. CALIFORNIA BLVD.
SUITE 500
WALNUT CREEK, CA 94596

Designed by: BP
Date: 5/19/2023
Rev:
Dwn by: AC
Ckd by:
M&N Project No.: 9154-01
Reviewed by:
Drawing code:
Submitted by: MOFFATT & NICHOL
Drawing Scale:
Plot scale: 1:1 (D SHEET)

REGISTERED PROFESSIONAL ENGINEER
BRADFORD A. FORSTER
No. 042735
Exp. 3-31-24
CIVIL
STATE OF CALIFORNIA
SEAL

Sheet
Reference No.
C-114
INDEX: 15 OF 37

File: Q:\WC\9154-01 capitola wharf beach\4_CADD_Active_Wharf_sheet set\9154-01-C-114 ; Plotted: 5/19/2023 11:21 AM by: ESTRADA, JUSTIN ; Saved: 5/19/2023 11:16 AM by: JESTRADA

DRAWING SCALES SHOWN BASED ON 22"x34" DRAWING

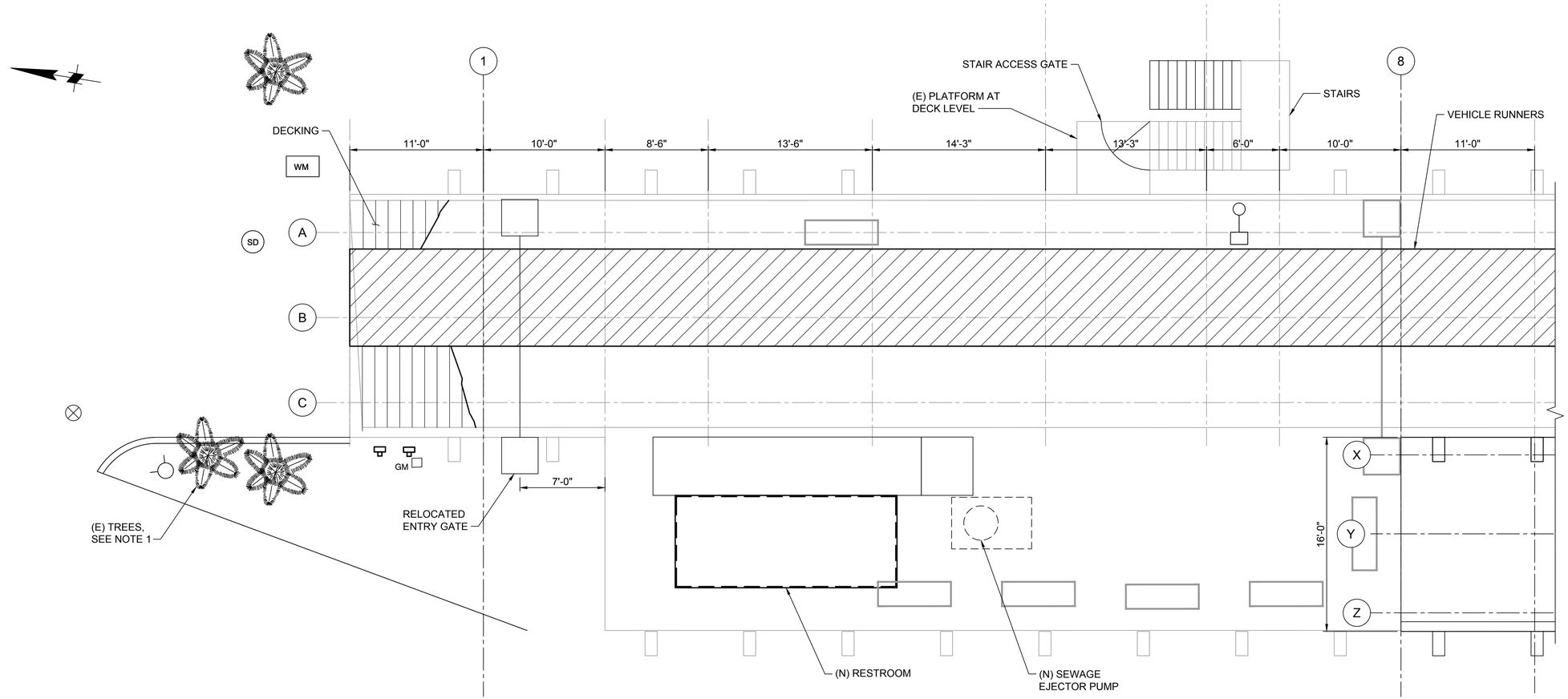

1 C-110 ABUTMENT PLAN
SCALE: 1" = 5'

NOTES

1. ATTEMPT TO PROTECT EXISTING TREES DURING RESTROOM INSTALLATION. IF UNABLE TO INSTALL RESTROOM, DEMOLISH AND DISPOSE OF TREES.

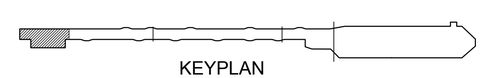

KEYPLAN
SCALE: NTS

5' 0' 5' 10'
SCALE: 1"=5'

Mark	Description	Date	Appr

CAPITOLA WHARF RESILIENCY AND PUBLIC ACCESS IMPROVEMENT PHASE 2

ABUTMENT PLAN

moffatt & nichol
2185 N. CALIFORNIA BLVD.
SUITE 500
WALNUT CREEK, CA 94596

Designed by: BP
Dwn by: AC
Ckd by: CMKR
Reviewed by: REVR
Submitted by: MOFFATT & NICHOL
Date: 5/19/2023
Rev: -
M&N Project No.: 91541-01
Drawing code:
Plot scale: 1:1 (D SHEET)
Drawing Scale:

REGISTERED PROFESSIONAL ENGINEER BRADFORD A. PORTER No. 042735 Exp. 3-31-24 CIVIL STATE OF CALIFORNIA
SEAL

Sheet Reference No.
C-115
INDEX: 16 OF 37

File: Q:\WC\91541-01 capitola wharf beach\4_CADD_Active_Wharf_sheet set\91540\1-C-115 ; Plotted: 5/19/2023 11:21 AM by ESTRADA, JUSTIN ; Saved: 5/19/2023 11:16 AM by JESTRADA

DRAWING SCALES SHOWN BASED ON 22"x34" DRAWING

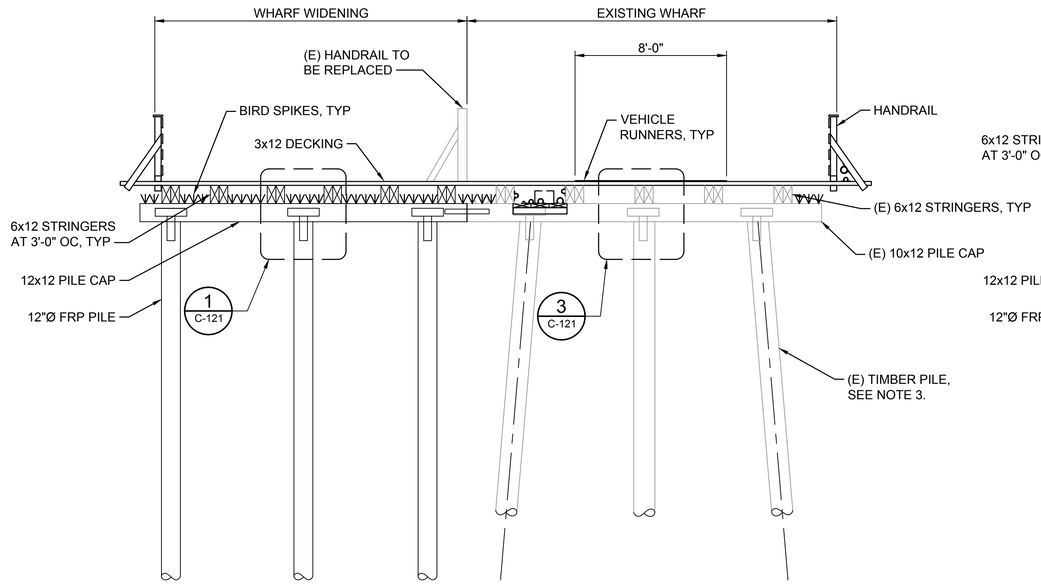

A C-111 SECTION - BENTS 28-41
SCALE: 1/4" = 1'-0"

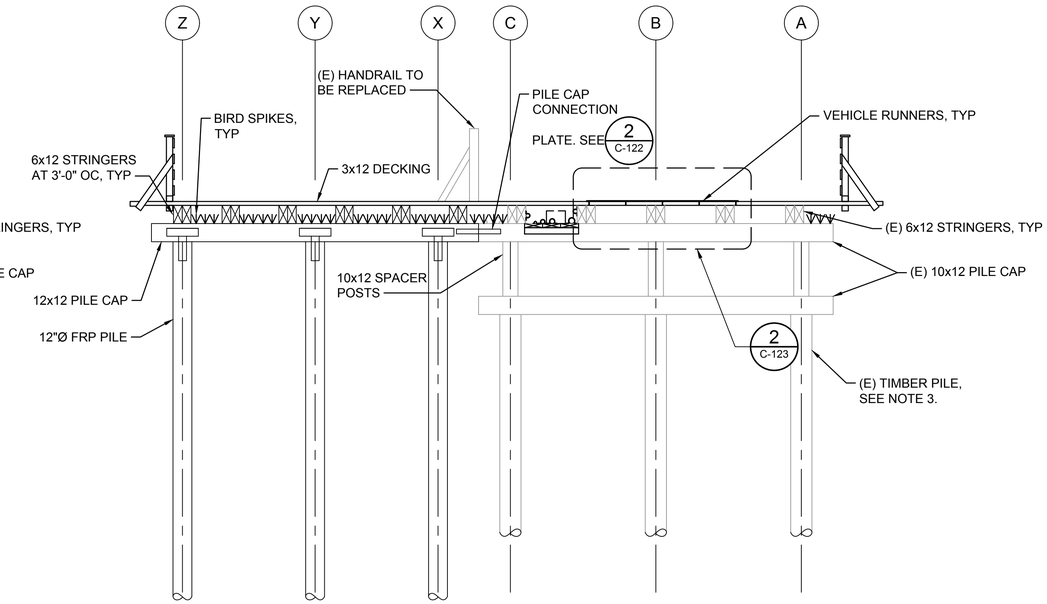

B C-112 SECTION - BENTS 42-45
SCALE: 1/4" = 1'-0"

NOTES:

1. THE CROSS SECTION OF THE WHARF AT BENTS 8-27 IS SIM TO A C-120 EXCEPT THE (E) PILES ARE VERTICAL.
2. THE CROSS SECTION OF THE WHARF AT BENTS 46-50 IS SIM TO C C-120 EXCEPT THE WHARF WIDTH IS LESS.
3. (E) TIMBER PILES VARY IN SIZE FROM 12"-15"Ø PILES.

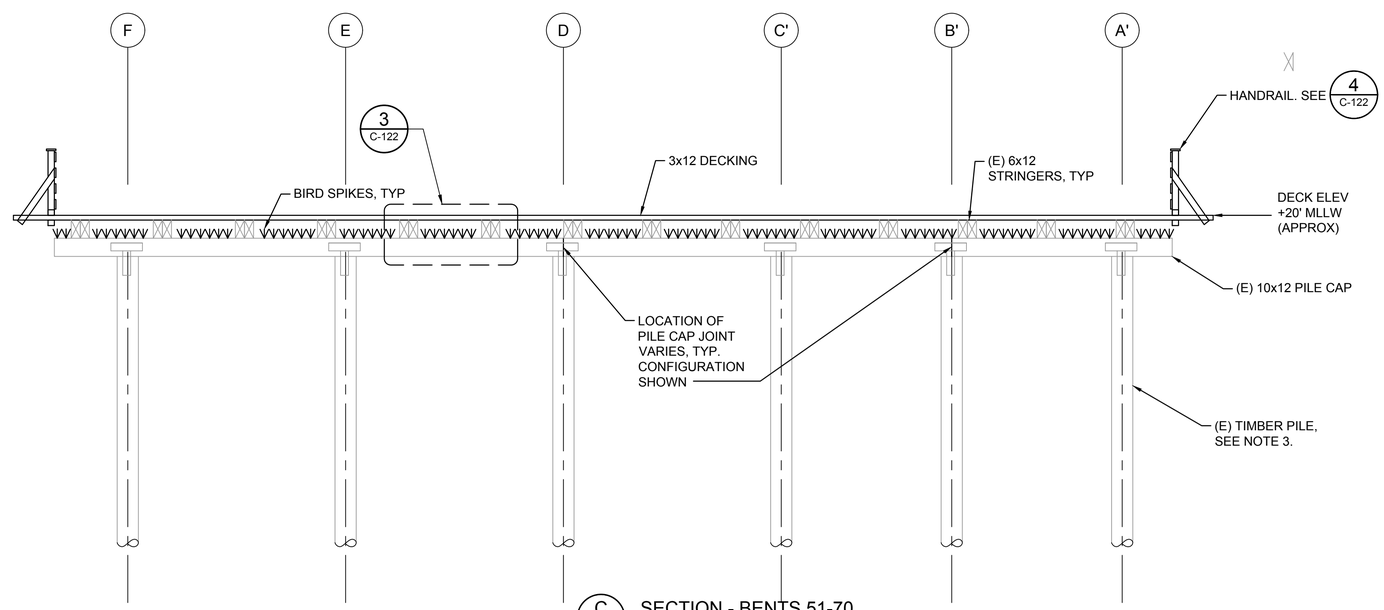

C C-113 SECTION - BENTS 51-70
SCALE: 1/4" = 1'-0"

4'-0" 0'-0" 4'-0" 8'-0"
SCALE: 1/4"=1'-0"

CITY OF CAPITOLA
INCORPORATED 1949

Mark	Description	Date	Appr

CAPITOLA WHARF RESILIENCY AND PUBLIC ACCESS IMPROVEMENT PHASE 2

SECTIONS

moffatt & nichol
2185 N. CALIFORNIA BLVD.
SUITE 500
WALNUT CREEK, CA 94596

Designed by: AC
Dwn by: AC
Ckd by: BP
Reviewed by:
Submitted by: MOFFATT & NICHOL
Date: 5/19/2023
M&N Project No.: 9154-01
Rev.
Drawing code:
Drawing Scale:
Plot scale: 1:1 (O SHEET)

REGISTERED PROFESSIONAL ENGINEER
BRADFORD A. FORSTER
No. 042735
Exp. 3-31-24
CIVIL
STATE OF CALIFORNIA
SEAL

Sheet Reference No.
C-120
INDEX: 17 OF 37

File: Q:\WC\9154-01 capitola wharf beach\4_CADD_Active_Wharf_sheet set\9154-01-C-120 ; Plotted: 5/19/2023 11:22 AM by: ESTRADA, JUSTIN ; Saved: 5/19/2023 11:16 AM by: ACANEPA

DRAWING SCALES SHOWN BASED ON 22"x34" DRAWING

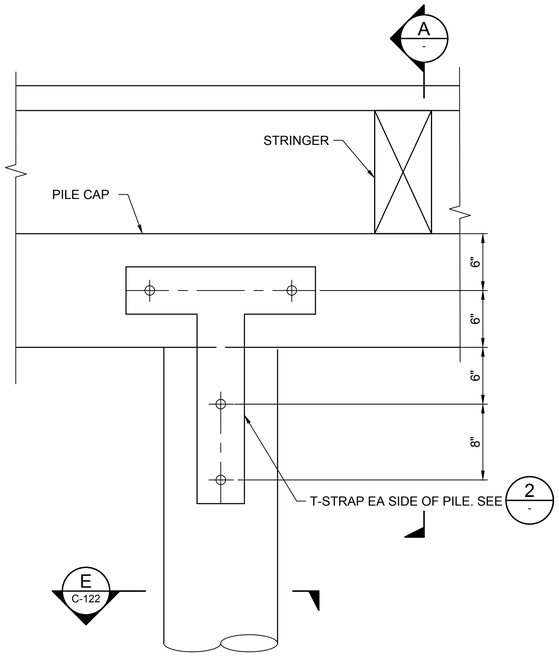

1 / C-120 WIDENED WHARF STRUCTURAL FRAMING DETAIL
SCALE: 1 1/2" = 1'-0"

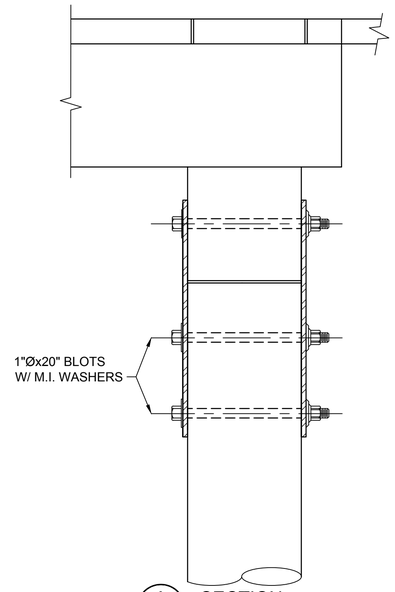

A / - SECTION
SCALE: 1 1/2" = 1'-0"

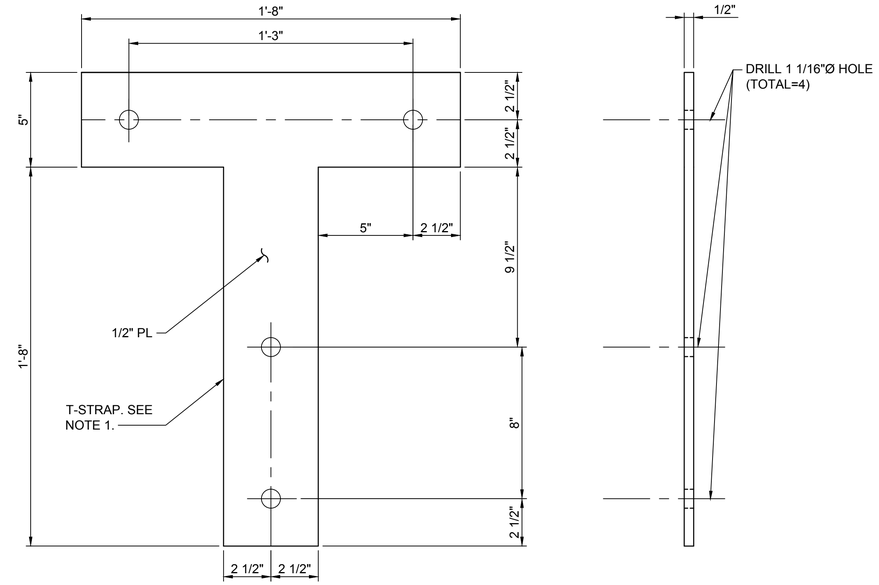

2 / - FRP PILE T-STRAP DETAIL
SCALE: 3" = 1'-0"

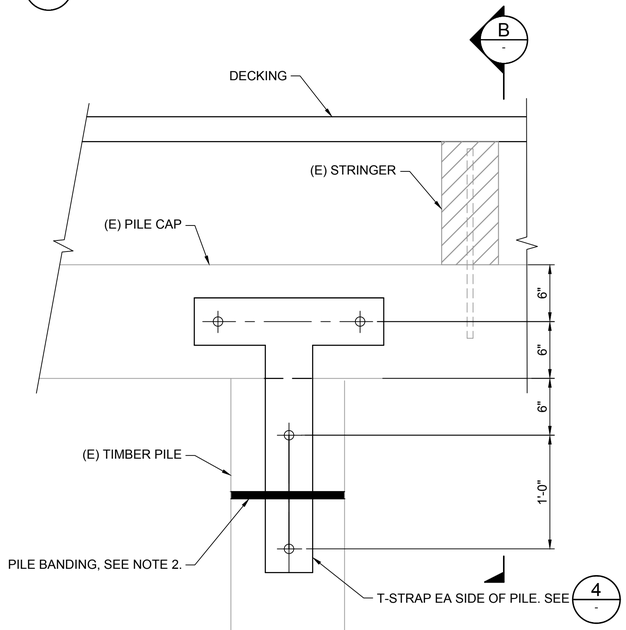

3 / C-120 EXISTING WHARF STRUCTURAL FRAMING DETAIL
SCALE: 1 1/2" = 1'-0"

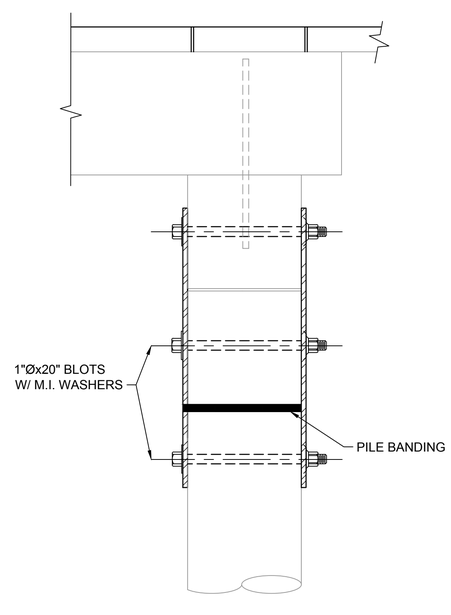

B / - SECTION
SCALE: 1 1/2" = 1'-0"

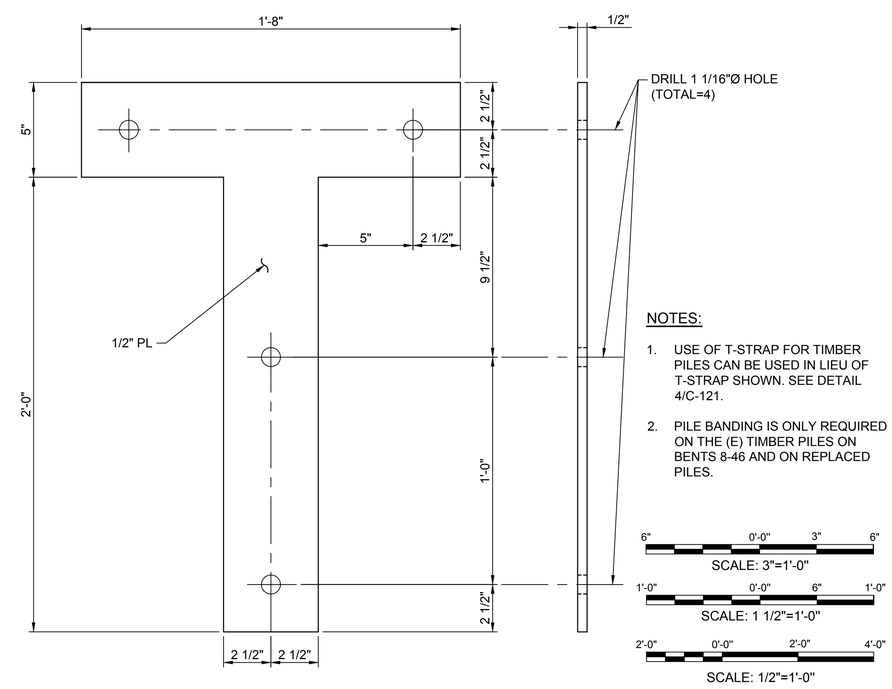

NOTES:

1. USE OF T-STRAP FOR TIMBER PILES CAN BE USED IN LIEU OF T-STRAP SHOWN. SEE DETAIL 4/C-121.
2. PILE BANDING IS ONLY REQUIRED ON THE (E) TIMBER PILES ON BENTS 8-46 AND ON REPLACED PILES.

4 / - TIMBER PILE T-STRAP DETAIL
SCALE: 3" = 1'-0"

DRAWING SCALES SHOWN BASED ON 22"x34" DRAWING

CITY OF CAPITOLA
INCORPORATED 1949

Mark	Description	Date	Appr.

CAPITOLA WHARF RESILIENCY AND PUBLIC ACCESS IMPROVEMENT PHASE 2

TYPICAL DETAILS 1 OF 3

moffatt & nichol
2185 N. CALIFORNIA BLVD.
SUITE 500
WALNUT CREEK, CA 94596

Designed by: AC	Date: 5/19/2023
Dwn by: AC	Ckd by: BP
Reviewed by:	M&N Project No.: 9154-01
Submitted by: MOFFATT & NICHOL	Drawing Scale: Plot scale: 1:1 (D SHEET)
	Drawing code:
	Rev.

REGISTERED PROFESSIONAL ENGINEER
BRADFORD A. POLLER
No. 042735
Exp. 3-31-24
CIVIL
STATE OF CALIFORNIA
SEAL

Sheet Reference No.
C-121
INDEX: 18 OF 37

File: Q:\WC\9154-01 capitola wharf beach\4_CADD_Active_Wharf_sheet set\9154-01-C-121 ; Plotted: 5/19/2023 11:22 AM by ESTRADA, JUSTIN ; Saved: 5/19/2023 11:16 AM by JESTRADA

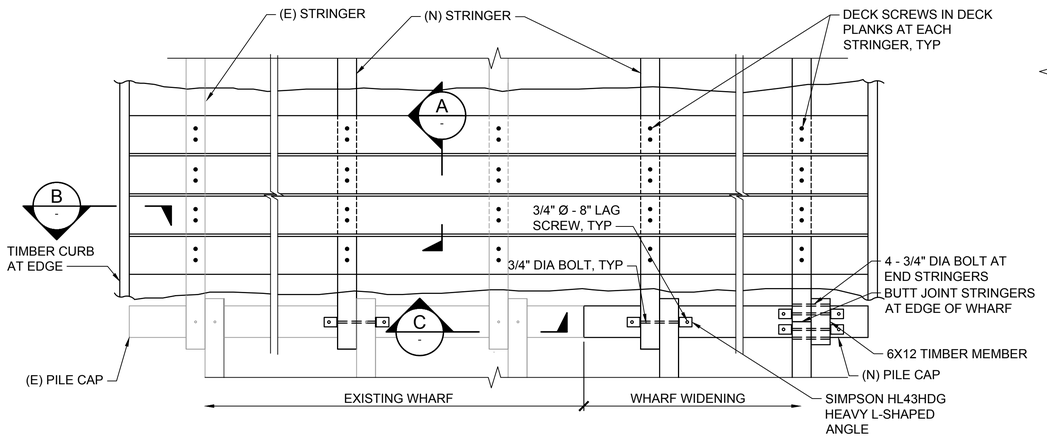

1 C-110 TYPICAL DECK PLAN DETAIL
SCALE: 1/2" = 1'-0"
C-111, C-112, C-113

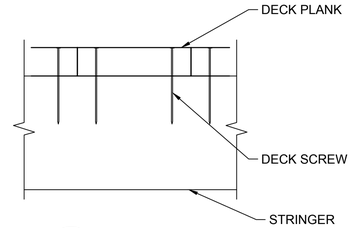

A - SECTION
SCALE: 1 1/2" = 1'-0"

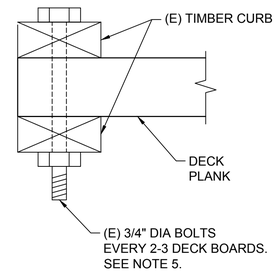

B - SECTION
SCALE: 1 1/2" = 1'-0"

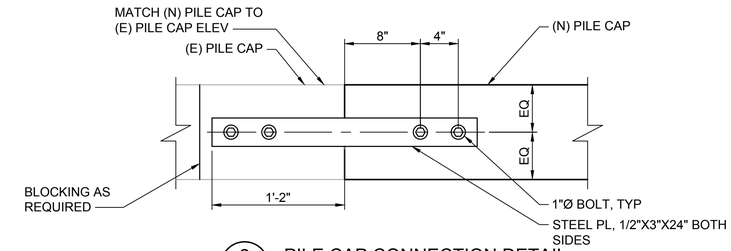

2 C-120 PILE CAP CONNECTION DETAIL
SCALE: 1 1/2" = 1'-0"

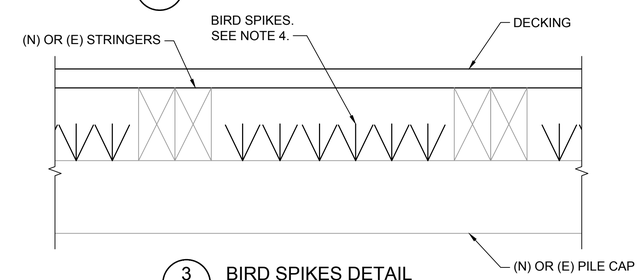

3 C-120 BIRD SPIKES DETAIL
SCALE: 1" = 1'-0"

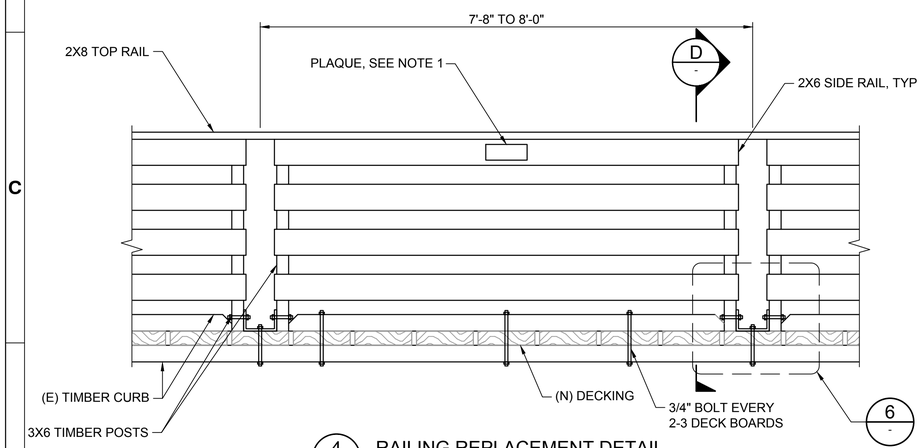

4 C-120 RAILING REPLACEMENT DETAIL
SCALE: 3/4" = 1'-0"

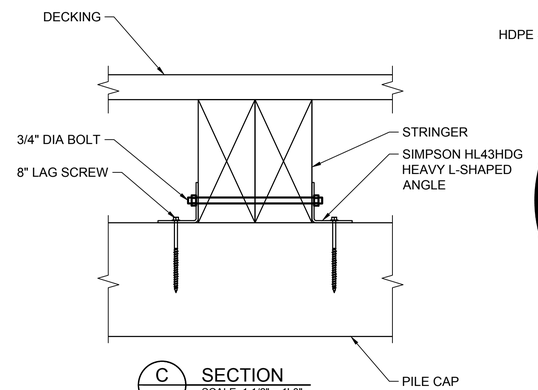

C - SECTION
SCALE: 1 1/2" = 1'-0"

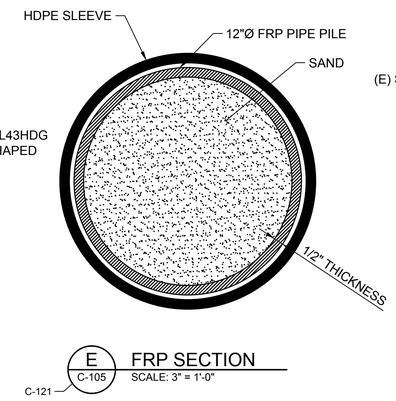

E C-105 FRP SECTION
SCALE: 3" = 1'-0"
C-121

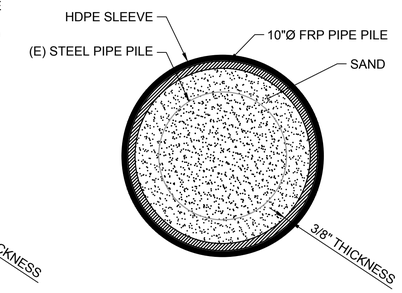

F C-105 FRP OVER (E) STEEL
SCALE: 3" = 1'-0"

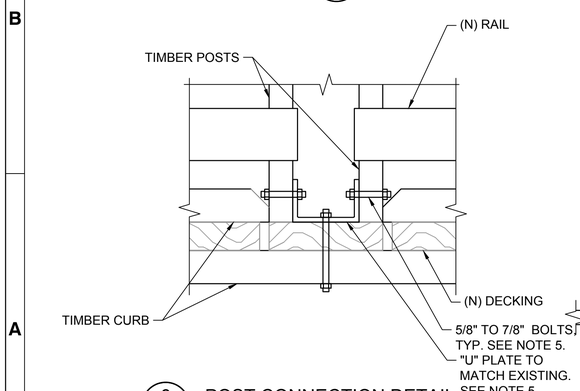

6 - POST CONNECTION DETAIL
SCALE: 1 1/2" = 1'-0"

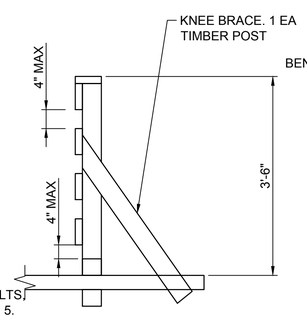

D - RAILING - SECTION
SCALE: 3/4" = 1'-0"

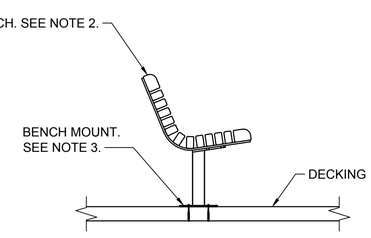

5 - BENCH MOUNTING DETAIL
SCALE: 3/4" = 1'-0"

NOTES:

1. MEMORIAL PLAQUES SHALL BE REINSTALLED IN THE SAME LOCATION ALONG THE RAILING.
2. BENCHES SHALL BE CONSTRUCTED OF TIMBER SLATS WITH A STEEL FRAME, TIMBERFORM MODEL GREENWAY 2140-6-P (PEDESTAL MOUNT).
3. MOUNT BENCHES PER MANUFACTURER'S INSTRUCTIONS, UTILIZING LAG SCREWS.
4. BIRD SPIKES SHALL BE RITE SPIKE 5 PRONG BY HOT FOOT BIRD REPELLENTS OR APPROVED EQUAL. BIRD SPIKES SHALL BE INSTALLED PER MANUFACTURER'S RECOMMENDATIONS. INSTALL BIRD SPIKES TO PROVIDE FULL COVERAGE OF PILE CAP BETWEEN STRINGERS.
5. (E) HARDWARE CAN BE REUSED IF SERVICEABLE. ASSUME 50% REQUIRES REPLACEMENT.

6" 0'-0" 3" 6"
SCALE: 3"=1'-0"

2'-0" 0'-0" 1'-0" 2'-0"
SCALE: 3/4"=1'-0"

1'-0" 0'-0" 6" 1'-0"
SCALE: 1 1/2"=1'-0"

2'-0" 0'-0" 2'-0" 4'-0"
SCALE: 1/2"=1'-0"

CITY OF CAPITOLA
INCORPORATED 1949

Mark	Description	Date	Appr

CAPITOLA WHARF
RESILIENCY AND PUBLIC ACCESS IMPROVEMENT PHASE 2

TYPICAL DETAILS 2 OF 3

moffatt & nichol
2185 N. CALIFORNIA BLVD.
SUITE 500
WALNUT CREEK, CA 94596

Designed by: AC
Dwn by: AC
Ckd by: BP
Reviewed by:
Submitted by: MOFFATT & NICHOL
Date: 5/19/2023
M&N Project No.: 9154-01
Drawing code:
Drawing Scale:
Plot scale: 1:1 (0 SHEET)
Rev:

REGISTERED PROFESSIONAL ENGINEER
BRADFORD A. POWERS
No. 042735
Exp. 3-31-24
CIVIL
STATE OF CALIFORNIA
SEAL

Sheet Reference No.
C-122
INDEX: 19 OF 37

File: Q:\WO\9154-01 capitola wharf beach\4_CADD_Active_Wharf_sheet set\9154-01-C-122 ; Plotted: 5/19/2023 11:22 AM by: ESTRADA, JUSTIN ; Saved: 5/19/2023 11:16 AM by: ACANEPA

DRAWING SCALES SHOWN BASED ON 22"x34" DRAWING

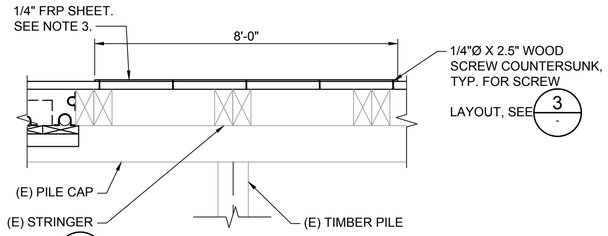

2 C-120 VEHICLE RUNNER - SECTION
SCALE: 1/2" = 1'-0"

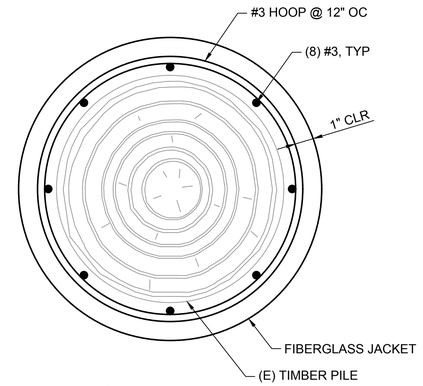

A - SECTION
SCALE: 3" = 1'-0"

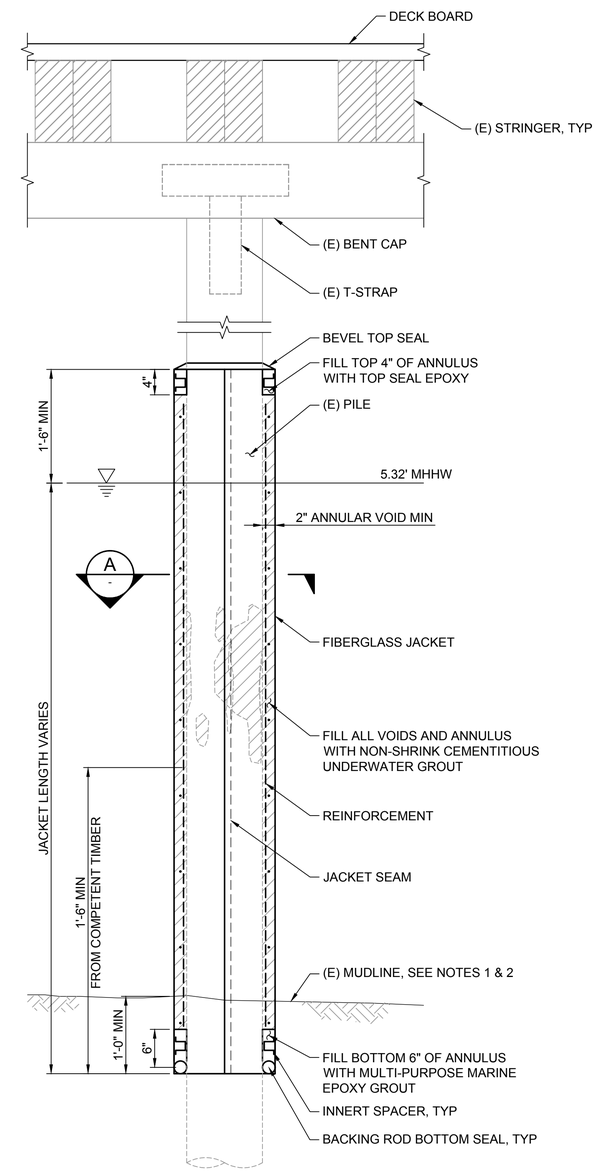

1 C-105 PILE REPAIR DETAIL
SCALE: 1" = 1'-0"

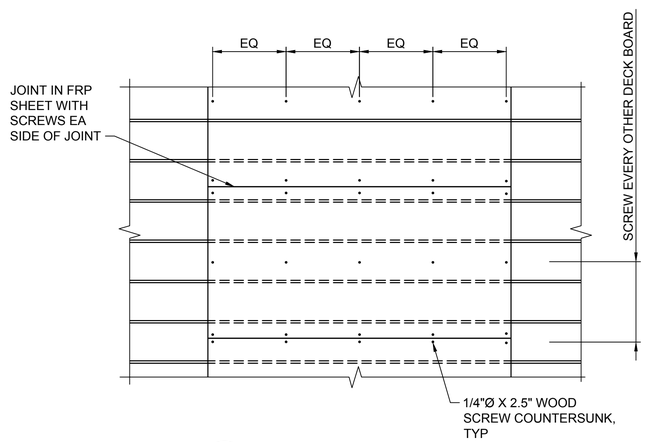

3 - VEHICLE RUNNER - DETAIL
SCALE: 1/2" = 1'-0"

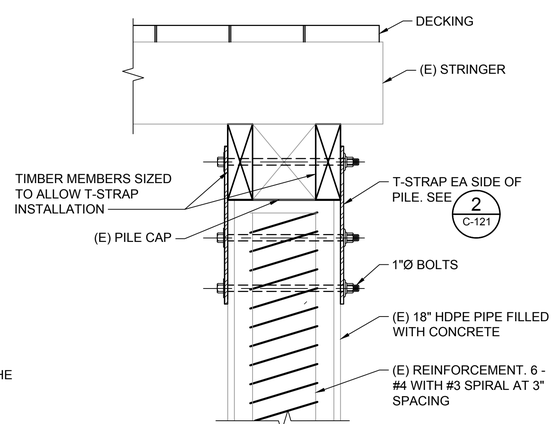

4 C-103 PILE CAP RECONNECTION
SCALE: 1" = 1'-0"

NOTES:

1. EXCAVATE THE AREA AROUND THE PILE TO EXTEND THE PILE JACKET BELOW MUDLINE.
2. AFTER INSTALLATION OF THE JACKET IS COMPLETE, BACKFILL THE EXCAVATED AREA AROUND THE PILE WITH NATIVE MATERIAL.
3. FRP SHEET SHALL BE PROFORM FLAT SHEET WITH ALUMINUM OXIDE GRIT SURFACE BY GRATING SYSTEMS, INC OR CITY APPROVED EQUAL.

6" 0'-0" 3" 6"
SCALE: 3"=1'-0"

1'-0" 0'-0" 1'-0" 2'-0"
SCALE: 1"=1'-0"

Mark	Description	Date	Appr

CITY OF CAPITOLA
INCORPORATED 1949

CAPITOLA WHARF RESILIENCY AND PUBLIC ACCESS IMPROVEMENT PHASE 2

TYPICAL DETAILS 3 OF 3

moffatt & nichol
2185 N. CALIFORNIA BLVD.
SUITE 500
WALNUT CREEK, CA 94596

Designed by: AC
Dwn by: AC
Ckd by: BP
Reviewed by:
Submitted by: MOFFATT & NICHOL
Date: 5/19/2023
M&N Project No.: 9154-01
Drawing code:
Drawing Scale:
Plot scale: 1:1 (D SHEET)
Rev:

REGISTERED PROFESSIONAL ENGINEER
BRADFORD A. PORTER
No. 042735
Exp. 3-31-24
CIVIL
STATE OF CALIFORNIA
SEAL

Sheet
Reference No.
C-123
INDEX: 20 OF 37

File: Q:\WO\9154-01 capitola wharf beach\4_CADD_Active_Wharf_sheet set\9154-01-C-123 ; Plotted: 5/19/2023 11:22 AM by ESTRADA, JUSTIN ; Saved: 5/19/2023 11:17 AM by ACANEPA

DRAWING SCALES SHOWN BASED ON 22"x34" DRAWING

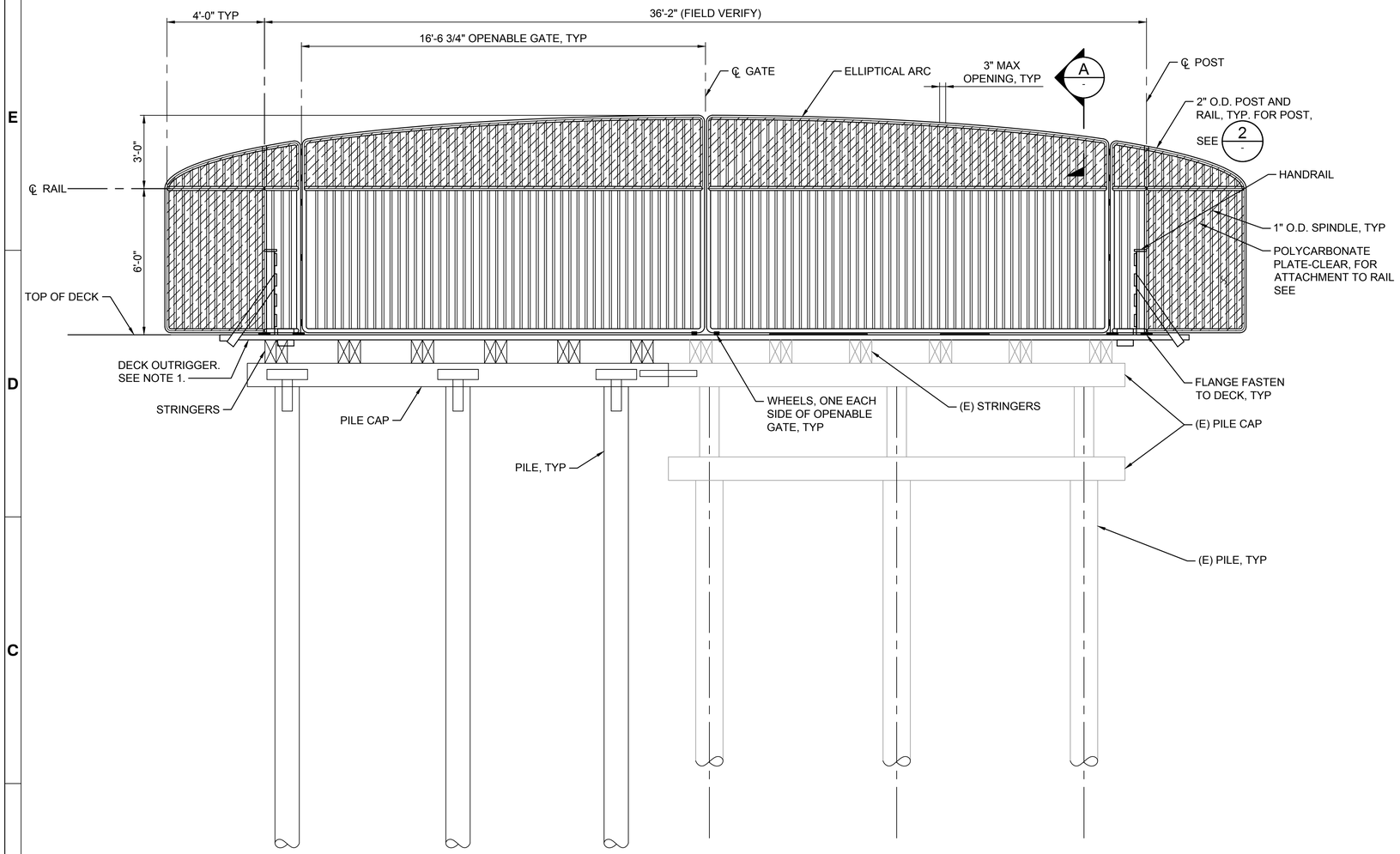

1 C-103 FRONT ELEVATION
SCALE: 3/8" = 1'-0"

SPECIFICATIONS:

1. GATE MAY BE FABRICATED OF ALUMINUM OR MILD STEEL.
2. SUBMIT SHOP DRAWINGS FOR THE SECURITY GATE, SHOWING ALL MATERIALS, MEMBER SHAPES AND SIZES, DIMENSIONS, QUANTITIES, CONNECTING DETAILS, AND ACCESSORIES. SHOP DRAWINGS SHALL BE PROVIDED FOR ALL SPECIALLY FABRICATED ITEMS, AND CATALOG SHEETS FOR ALL STANDARD MANUFACTURED ITEMS. CONTRACTOR SHALL DESIGN ALL CONNECTIONS.
3. ALL ALUMINUM USED IN THE FABRICATION SHALL BE ALLOY 6061-T6 OR 6063-T6. ALL WELDING OF ALUMINUM SHALL COMPLY WITH ALUMINUM ASSOCIATION SPECIFICATIONS FOR ALUMINUM STRUCTURES.
4. ALL MILD STEEL COMPONENTS SHALL CONFORM TO ASTM A 36 AND BE GALVANIZED AFTER FABRICATION IN ACCORDANCE WITH ASTM A 123. ALL WELDING OF STEEL SHALL COMPLY WITH AMERICAN WELDING SOCIETY D 1.1.
5. ANY FASTENERS BETWEEN ALUMINUM COMPONENTS SHALL BE HOT-DIP GALVANIZED OR 316 STAINLESS STEEL IN ACCORDANCE WITH ASTM A 153L.
6. ALL WELDS SHALL BE MADE WITH A FILLER METAL ALLOY THAT WILL PRODUCE A WELD THAT IS COMPATIBLE IN CORROSION RESISTANCE WITH THE BASE METAL.
7. DRAWINGS SHOW GENERAL LAYOUT AND CONFIGURATION REQUIREMENTS, AS WELL AS TYPICAL DIMENSIONS. SPECIFIC DIMENSIONS, WHICH CONFORM TO THE SITE REQUIREMENTS AND CALIFORNIA OSHA REGULATIONS, WILL BE REQUIRED FROM THE FABRICATOR.
8. SECURITY GATE HARDWARE: HINGES SHALL BE STANLEY 4-INCH BUTT HINGES, 1 1/2 PAIR OR EQUAL.
9. ALL WORK SHALL CONFORM TO THE APPROVED SHOP DRAWINGS, PROJECT DRAWINGS AND THIS SPECIFICATION. CONSTRUCTION DETAILS, FINISHING DETAILS AND COLORS SHALL BE CONSISTENT THROUGHOUT. WORK SHALL BE ACCURATELY SET TO ESTABLISH LINES AND ELEVATIONS, AND SECURELY FASTENED IN PLACE. CUTTING, DRILLING AND PUNCHING SHALL PRODUCE CLEAN TRUE LINES AND SURFACES. EXPOSED SURFACES OF WORK SHALL HAVE A SMOOTH FINISH.
10. WELDING: PARTS TO BE WELDED SHALL BE FREE OF DIRT, GREASE AND OTHER CONTAMINANTS, AND SHALL FIT UP PROPERLY FOR SOUND WELDING. SURFACES TO BE WELDED SHALL NOT BE CUT WITH OXYGEN. SAWING, SHEARING OR MACHINING MAY BE USED. ALL WELDING SHALL BE WITH AN INERT GAS SHIELDED ARC PROCESS. MACHINE SETTINGS SHALL BE DEVELOPED BY MAKING TEST WELDS OF THE SAME MATERIAL ALLOY AND GEOMETRY AS THE WORK PIECES AND TESTING THE SAMPLE WELDS DESTRUCTIVELY.
11. WHEELS SHALL BE INSTALLED AT THE END OF EACH OPENABLE GATE AS SHOWN. WHEELS SHALL BE ALUMINUM WITH A MOLDED POLYURETHANE TREAD AND SEALED ROLLER BEARINGS. AXLE SHALL BE STAINLESS STEEL.

NOTES:

1. LOCATE SECURITY GATE AT THE DECK OUTRIGGER CLOSEST TO BENT 43.
2. THE LOWER FLIGHT OF STAIRS SHALL BE FRAMED TO MATCH THE EXISTING UPPER FLIGHT OF STAIRS. STEP HEIGHT SHALL MATCH EXISTING. THE MEMBER SIZED SHOWN ARE APPROXIMATE AND SHALL BE VERIFIED IN FIELD.

LEGEND:

POLYCARBONATE PLATE

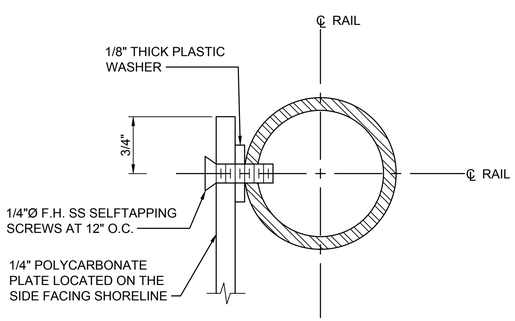

A - SECTION
SCALE: 1" = 1"

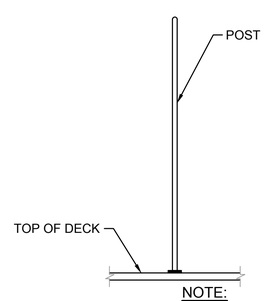

NOTE:

HANDRAIL, STRINGER, PILE CAPS, AND PILES NOT SHOWN FOR CLARITY.

2 - SIDE ELEVATION
SCALE: 3/8" = 1'-0"

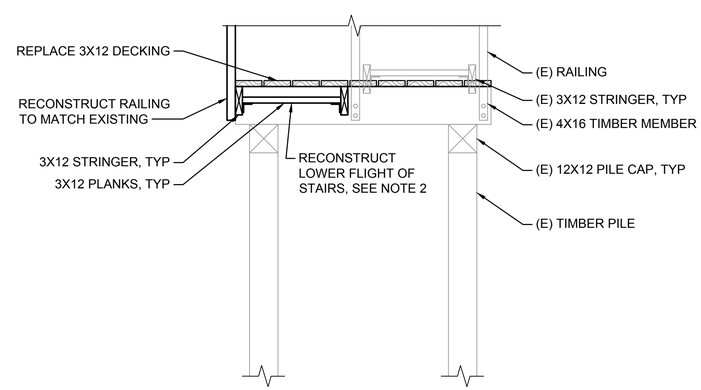

B C-124 STAIR SECTION
SCALE: 3/8" = 1'-0"

6" 0'-0" 3" 6"
SCALE: 3"=1'-0"

1'-0" 0'-0" 1'-0" 2'-0"
SCALE: 1"=1'-0"

CITY OF CAPITOLA — INCORPORATED 1949

Mark	Description	Date	Appr

CAPITOLA WHARF RESILIENCY AND PUBLIC ACCESS IMPROVEMENT PHASE 2

SECURITY GATE DETAILS

Designed by: AC
Date: 5/19/2023
Rev:
Dwn by: AC
Ckd by: BP
M&N Project No.: 9154-01
Drawing code:
Reviewed by:
Drawing Scale:
Submitted by: MOFFATT & NICHOL
Plot scale: 1:1 (0 SHEET)

moffatt & nichol
2185 N. CALIFORNIA BLVD.
SUITE 500
WALNUT CREEK, CA 94596

REGISTERED PROFESSIONAL ENGINEER — BRADFORD A. FORSTER — No. 042735 — Exp. 3-31-24 — CIVIL — STATE OF CALIFORNIA
SEAL

Sheet Reference No.
C-124
INDEX: 21 OF 37

File: Q:\WC\9154-01 capitola wharf beach\4_CADD_Active_Wharf_sheet set\9154-01-C-124 , Plotted: 5/19/2023 11:22 AM by ESTRADA, JUSTIN , Saved: 5/19/2023 11:17 AM by JESTRADA

DRAWING SCALES SHOWN BASED ON 22"x34" DRAWING

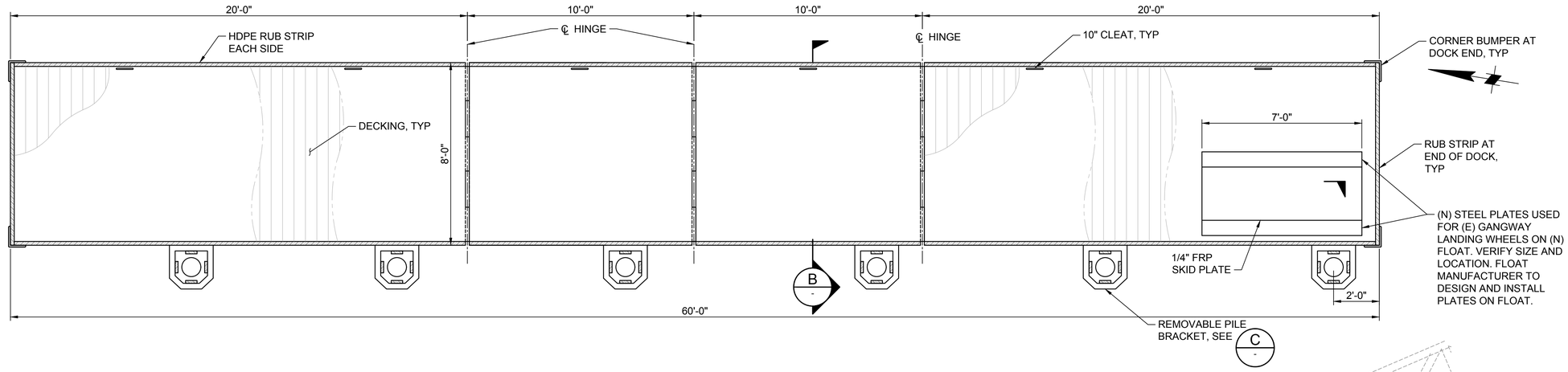

1 C-103 PLAN - DOCK
SCALE: 3/8" = 1'-0"

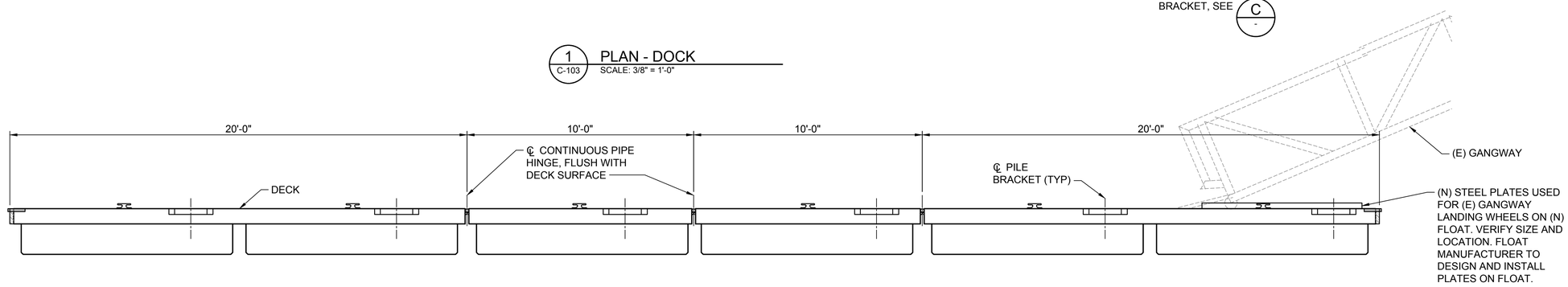

A - DOCK LONGITUDINAL SECTION
SCALE: 3/8" = 1'-0"

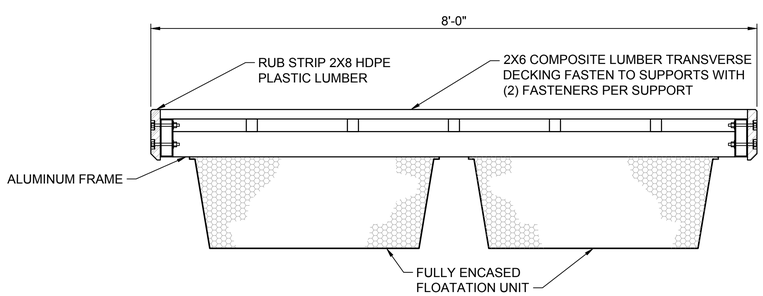

B - DOCK CROSS SECTION
SCALE: 1" = 1'-0"

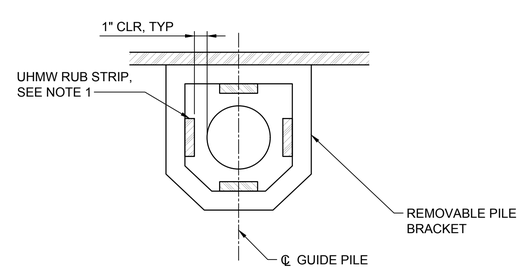

C - TYPICAL PILE BRACKET
SCALE: 1" = 1'-0"

NOTES:

1. UHMW GUIDE PILE RUB STRIP SHALL HAVE A MINIMUM THICKNESS OF 1-INCH.

4'-0" 0'-0" 2'-0" 4'-0"
SCALE: 3/8"=1'-0"

1'-0" 0'-0" 1'-0" 2'-0"
SCALE: 1"=1'-0"

2'-0" 0'-0" 2'-0" 4'-0"
SCALE: 1/2"=1'-0"

KEYPLAN
SCALE: NTS

CITY OF CAPITOLA
INCORPORATED 1949

Mark	Description	Date	Appr

CAPITOLA WHARF RESILIENCY AND PUBLIC ACCESS IMPROVEMENT PHASE 2

DOCK PLAN AND DETAILS

moffatt & nichol
2185 N. CALIFORNIA BLVD.
SUITE 500
WALNUT CREEK, CA 94596

Designed by: AC
Dwn by: AC
Ckd by: BP
Reviewed by:
Submitted by: MOFFATT & NICHOL
Date: 5/19/2023
Rev.
M&N Project No.: 9154-01
Drawing code:
Drawing Scale:
Plot scale: 1:1 (D SHEET)

REGISTERED PROFESSIONAL ENGINEER
BRADFORD A. PORTER
No. 042795
Exp. 3-31-24
CIVIL
STATE OF CALIFORNIA
SEAL

Sheet Reference No.
C-125
INDEX: 22 OF 37

File: Q:\WC\9154-01 capitola wharf beach\4_CADD_Active_Wharf_sheet set\915401-C-125 ; Plotted: 5/19/2023 11:22 AM by ESTRADA, JUSTIN ; Saved: 5/19/2023 11:17 AM by ACANEPA

DRAWING SCALES SHOWN BASED ON 22"x34" DRAWING

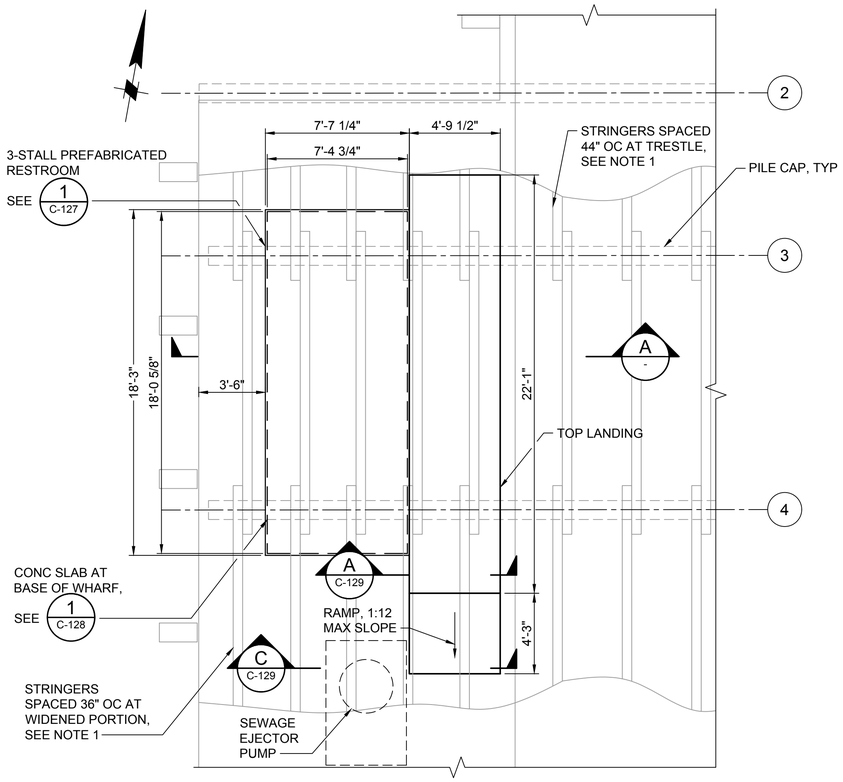

1 C-103 RESTROOM AT BASE OF WHARF
SCALE: 1/4" = 1'-0"

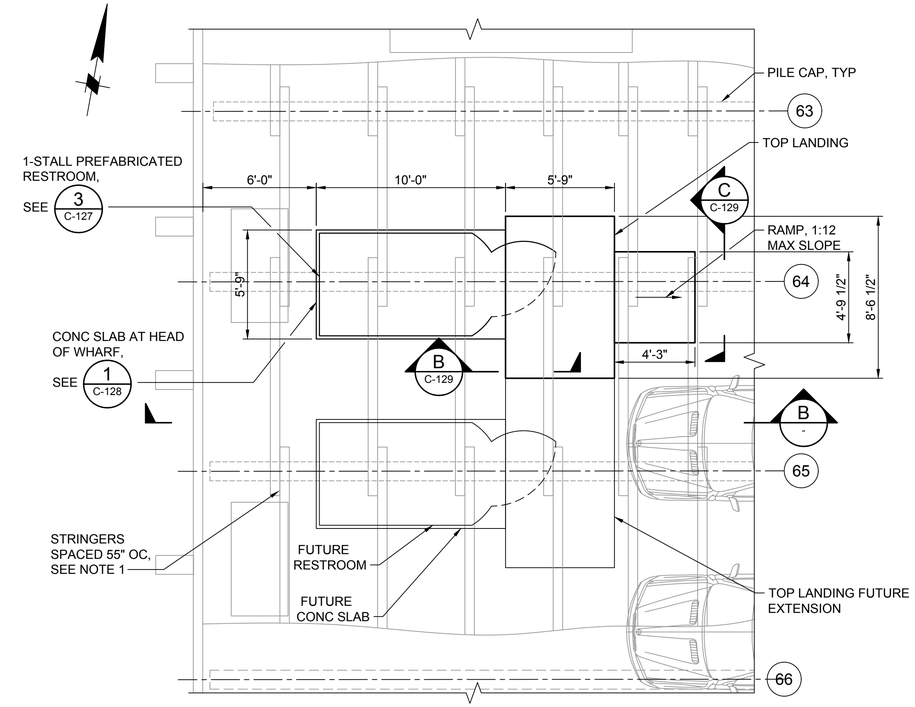

2 C-103 RESTROOM AT HEAD OF WHARF
SCALE: 1/4" = 1'-0"

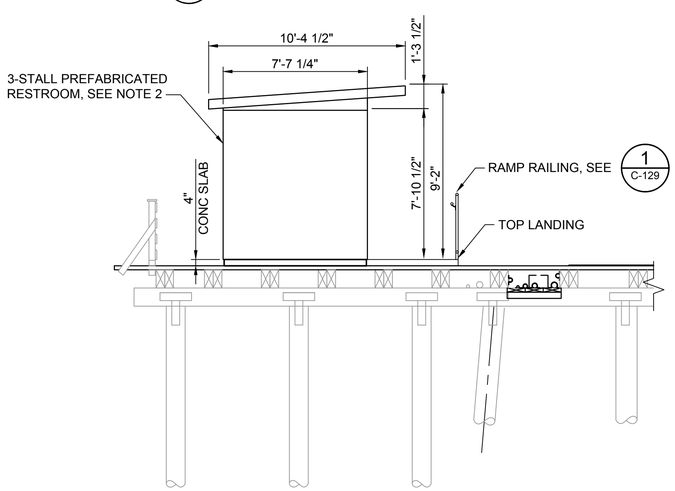

A - SECTION - RESTROOM AT BASE OF WHARF
SCALE: 1/4" = 1'-0"

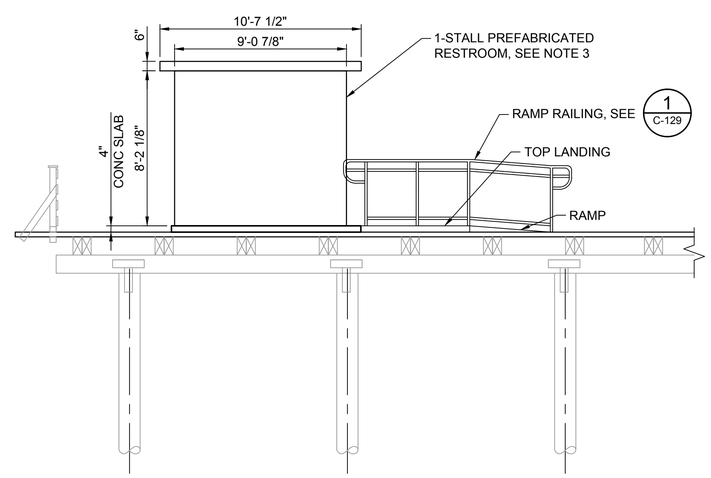

B - SECTION - RESTROOM AT HEAD OF WHARF
SCALE: 1/4" = 1'-0"

NOTES:

1. VERIFY STRINGER SPACING PRIOR TO BEGINNING WORK.
2. THE RESTROOM AT THE BASE OF THE WHARF SHALL BE CENTERED BETWEEN PILE CAPS 3 AND 4.
3. THE RESTROOM AT THE HEAD OF THE WHARF SHALL BE CENTERED ON PILE CAP 64.
4. USE MANUFACTURER RECOMMENDED FLOOR DRAINS.

4'-0" 0'-0" 4'-0" 8'-0"
SCALE: 1/4"=1'-0"

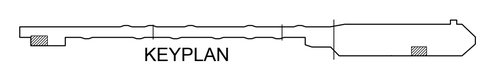

KEYPLAN
SCALE: NTS

CITY OF CAPITOLA
INCORPORATED 1949

Mark	Description	Date	Appr

CAPITOLA WHARF RESILIENCY AND PUBLIC ACCESS IMPROVEMENT PHASE 2

WHARF RESTROOMS 1 OF 2

Rev:
Date: 5/19/2023
M&N Project No.: 9154-01
Drawing code:
Designed by: JE
Cad by: BP
Dwn by: JE
Reviewed by:
Submitted by: MOFFATT & NICHOL
Drawing Scale:
Plot scale: 1:1 (D SHEET)

moffatt & nichol
2185 N. CALIFORNIA BLVD.
SUITE 500
WALNUT CREEK, CA 94596

REGISTERED PROFESSIONAL ENGINEER
BRADFORD A. FORTER
No. 042735
Exp. 3-31-24
CIVIL
STATE OF CALIFORNIA
SEAL

Sheet Reference No.
C-126
INDEX: 23 OF 37

File: Q:\WC\9154-01 capitola wharf beach\4_CADD_Active_Wharf_sheet set\9154-01-C-126 ; Plotted: 5/19/2023 11:22 AM by ESTRADA, JUSTIN ; Saved: 5/19/2023 11:17 AM by JESTRADA

DRAWING SCALES SHOWN BASED ON 22"x34" DRAWING

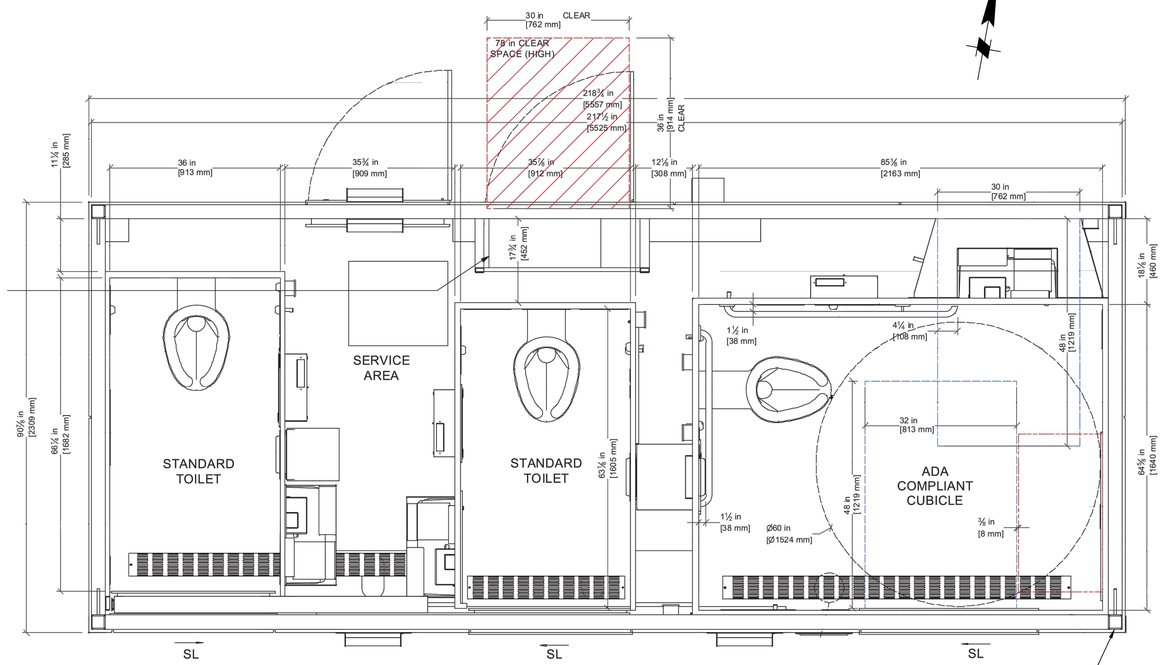

1 C-126 3-STALL PREFABRICATED RESTROOM PLAN
SCALE: 3/4" = 1'-0"

ANCHOR AT STEEL POSTS, SEE 2 C-128

2 - 3-STALL PREFABRICATED RESTROOM
SCALE: NTS

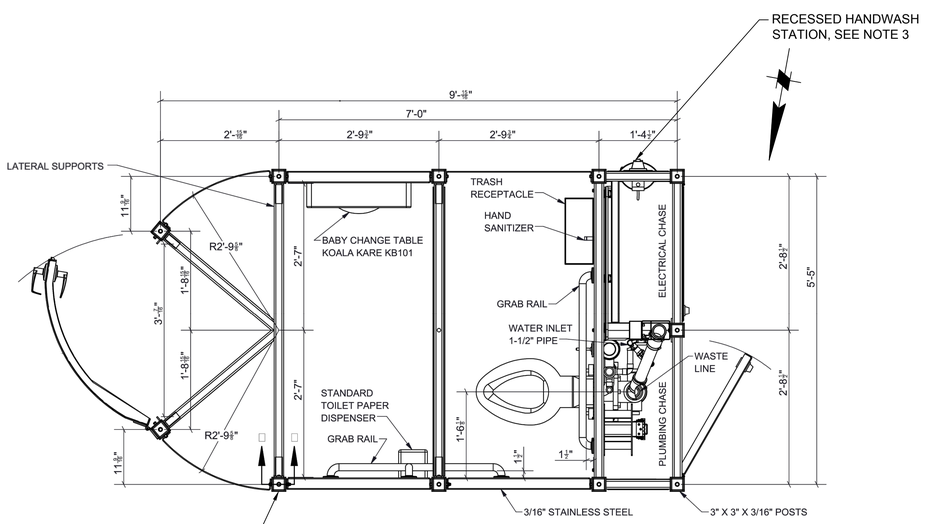

ANCHOR AT STEEL POSTS, SEE 3 C-128

3 C-126 1-STALL PREFABRICATED RESTROOM PLAN
SCALE: 3/4" = 1'-0"

4 - 1-STALL PREFABRICATED RESTROOM
SCALE: NTS

NOTES:

1. MODEL SHOWN FOR THE PREFABRICATED RESTROOM - 3 STALLS IS THE JUPITER TRIPLE BY EXELOO, OR APPROVED EQUAL.
2. MODEL SHOWN FOR THE PREFABRICATED RESTROOM - 1 STALL IS THE 316 SS PORTLAND LOO BY MADDEN FABRICATION OR APPROVED EQUAL.
3. RECESSED HANDWASH STATION SHOULD BE LOCATED ON THE SIDE FACING THE BOAT & BAIT SHOP, ENSURE THAT THE STATION IS ACCESSIBLE PER CBC GUIDELINES.

2'-0" 0'-0" 1'-0" 2'-0"
SCALE: 3/4"=1'-0"

CITY OF CAPITOLA
INCORPORATED 1949

Mark	Description	Date	Appr

CAPITOLA WHARF RESILIENCY AND PUBLIC ACCESS IMPROVEMENT PHASE 2

WHARF RESTROOMS 2 OF 2

moffatt & nichol
2185 N. CALIFORNIA BLVD.
SUITE 500
WALNUT CREEK, CA 94596

Designed by: JIE
Date: 5/19/2023
Rev.
Dwn by: JIE
Ckd by: BP
M&N Project No. : 9154-01
Reviewed by:
Drawing code:
Submitted by: MOFFATT & NICHOL
Drawing Scale: Plot scale: 1:1 (D SHEET)

REGISTERED PROFESSIONAL ENGINEER
BRADFORD A. POSTER
No. 042795
Exp. 3-31-24
CIVIL
STATE OF CALIFORNIA
SEAL

Sheet Reference No.
C-127
INDEX: 24 OF 37

File: Q:\WC\9154-01 capitola wharf beach\4_CADD_Active_Wharf_sheet set\915401-C-127 ; Plotted: 5/19/2023 11:22 AM by: ESTRADA, JUSTIN ; Saved: 5/19/2023 11:17 AM by: JESTRADA

DRAWING SCALES SHOWN BASED ON 22"x34" DRAWING

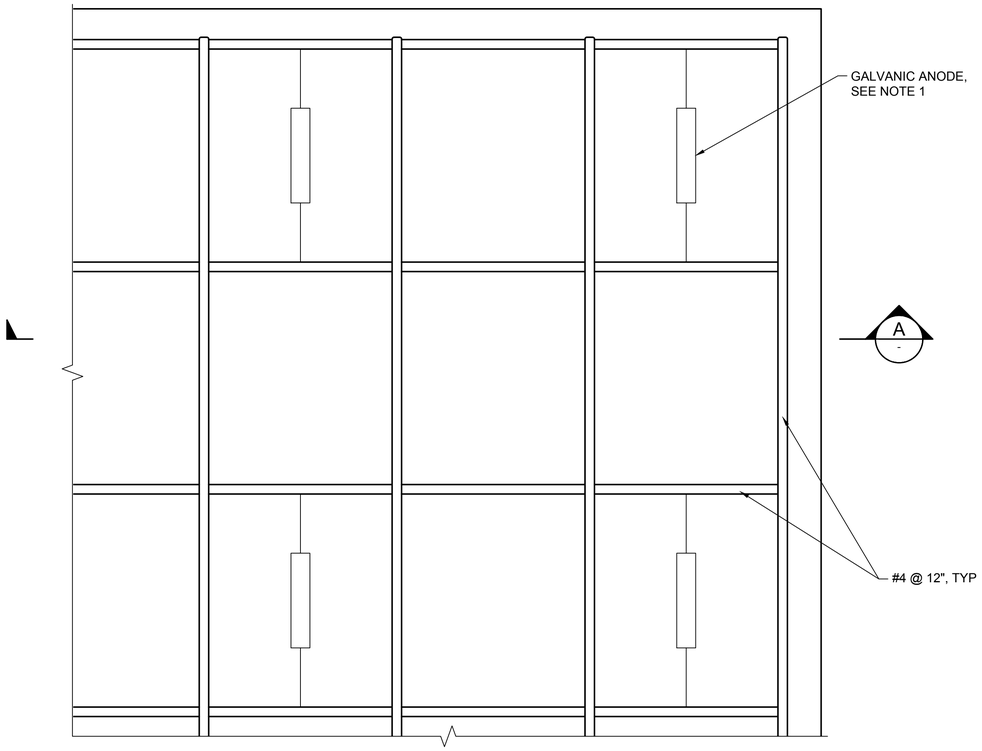

1 C-126 CONCRETE SLAB DETAIL
SCALE: 3" = 1'-0"

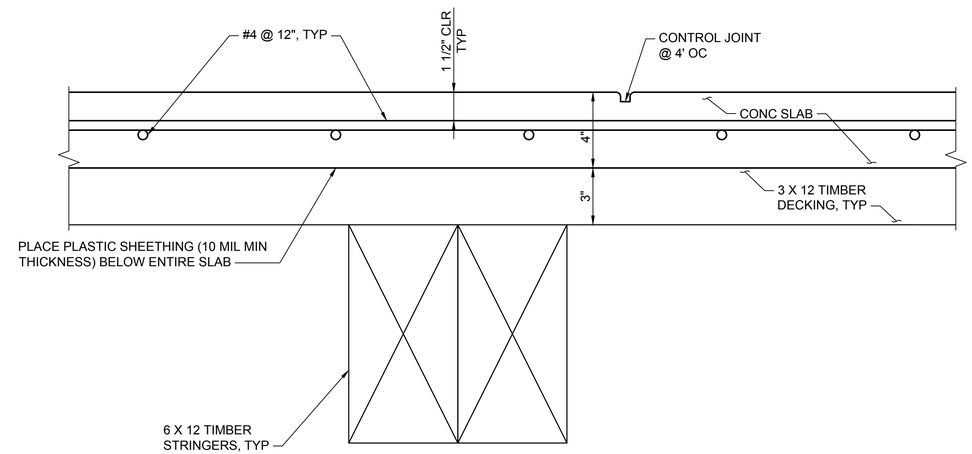

A - SECTION - CONCRETE SLAB
SCALE: 3" = 1'-0"

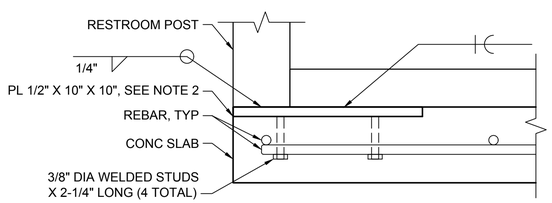

2 C-127 ANCHOR FOR RESTROOM AT BASE OF WHARF
SCALE: 3" = 1'-0"

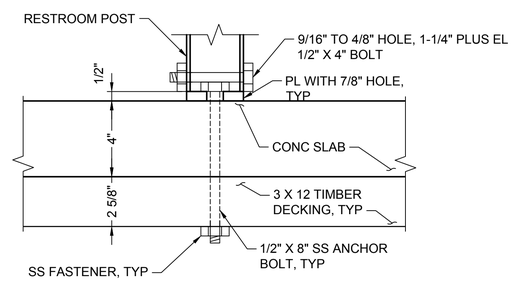

3 C-127 ANCHOR FOR RESTROOM AT HEAD OF WHARF
SCALE: 3" = 1'-0"

NOTES:

1. PLACE GALVANIC ANODE BETWEEN REBAR WITH A 30" MAX SPACING.
2. EMBEDDED STEEL PLATES TO BE PROVIDED BY MANUFACTURER. TIE IN REINFORCING TO CAST IN PLATES.
3. ANCHOR RESTROOMS TO SLABS PER MANUFACTURER RECOMMENDATIONS.

6" 0'-0" 3" 6"
SCALE: 3"=1'-0"

Mark	Description	Date	Appr

CAPITOLA WHARF
RESILIENCY AND PUBLIC ACCESS
IMPROVEMENT PHASE 2

WHARF RESTROOMS
FOUNDATION
DETAILS

Rev:
Date: 5/19/2023
M&N Project No.: 9154-01
Designed by: JIE
Cad by: BP
Dwn by: JE
Drawing code:
Reviewed by:
Submitted by: MOFFATT & NICHOL
Drawing Scale:
Plot scale: 1:1 (D SHEET)

moffatt & nichol
2185 N. CALIFORNIA BLVD.
SUITE 500
WALNUT CREEK, CA 94596

REGISTERED PROFESSIONAL ENGINEER
BRADFORD A. PORTER
No. 042735
Exp. 3-31-24
CIVIL
STATE OF CALIFORNIA
SEAL

Sheet
Reference No.
C-128
INDEX: 25 OF 37

File: Q:\WC\9154-01 capitola wharf beach\4_CADD_Active_Wharf_sheet set\9154-01-C-128 ; Plotted: 5/19/2023 11:22 AM by ESTRADA, JUSTIN ; Saved: 5/19/2023 11:17 AM by JESTRADA

DRAWING SCALES SHOWN BASED ON 22"x34" DRAWING

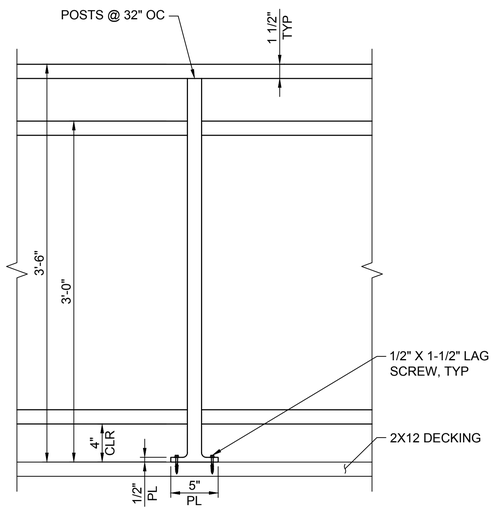

1 / C-126 RESTROOM RAMP AND LANDING RAILING
SCALE: 1 1/2" = 1'-0"

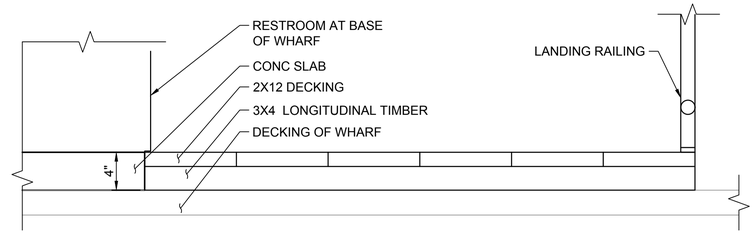

A / C-126 RESTROOM AT BASE OF WHARF LANDING DETAIL
SCALE: 1 1/2" = 1'-0"

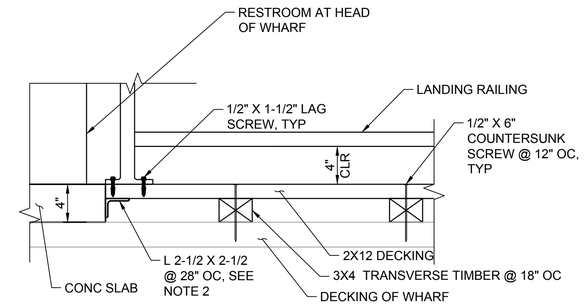

B / C-126 RESTROOM AT HEAD OF WHARF LANDING DETAIL
SCALE: 1 1/2" = 1'-0"

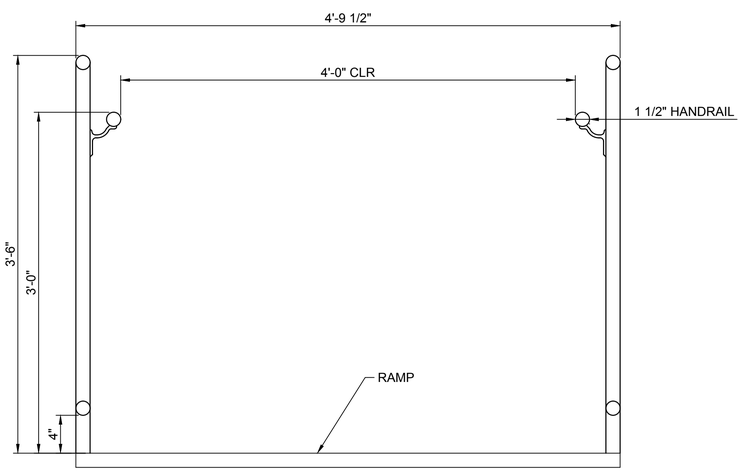

C / C-126 RESTROOM RAMP SECTION
SCALE: 1 1/2" = 1'-0"

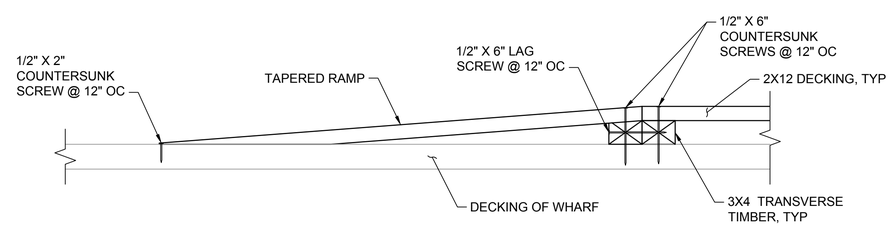

D / - RESTROOM RAMP LONGITUDINAL SECTION
SCALE: 1 1/2" = 1'-0"

NOTES:

1. RAMP AND LANDING SHALL COMPLY WITH THE CALIFORNIA BUILDING CODE.
2. ANGLES SHALL BE USED TO CONNECT FOUNDATION TO RAMP. USE ANGLES FOR BOTH THE RESTROOM AT THE BASE OF THE WHARF AND THE RESTROOM AT THE HEAD OF THE WHARF WITH THE SHOWN SECTION AND SPACING.

1'-0" 0'-0" 6" 1'-0"
SCALE: 1 1/2"=1'-0"

CITY OF CAPITOLA — INCORPORATED 1949

Mark	Description	Date	Appr

CAPITOLA WHARF RESILIENCY AND PUBLIC ACCESS IMPROVEMENT PHASE 2

WHARF RESTROOMS RAMP AND LANDING DETAILS

moffatt & nichol
2185 N. CALIFORNIA BLVD.
SUITE 500
WALNUT CREEK, CA 94596

Designed by: JE | Date: 5/19/2023 | Rev:
Dwn by: JE | Ckd by: BP | M&N Project No.: 9154-01
Reviewed by: | Drawing code:
Submitted by: MOFFATT & NICHOL | Drawing Scale: 1:1 (D SHEET) | Plot scale: 1:1 (D SHEET)

REGISTERED PROFESSIONAL ENGINEER — BRADFORD A. FORKER — No. 042735 — Exp. 3-31-24 — CIVIL — STATE OF CALIFORNIA
SEAL

Sheet Reference No.
C-129
INDEX: 26 OF 37

File: Q:\WC\9154-01 capitola wharf beach\4_CADD_Active_Wharf_sheet set\9154-01-C-129 ; Plotted: 5/19/2023 11:22 AM by ESTRADA, JUSTIN ; Saved: 5/19/2023 11:17 AM by JESTRADA

DRAWING SCALES SHOWN BASED ON 22"x34" DRAWING

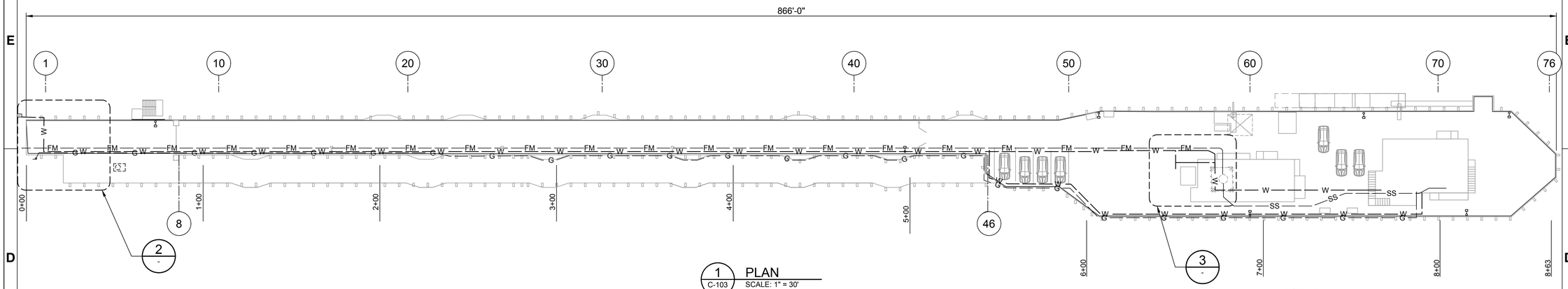

1 C-103 PLAN
SCALE: 1" = 30'

LEGEND

- W — EXISTING WATER
- FM — EXISTING FORCE MAIN
- SS — EXISTING SANITARY SEWER
- G — EXISTING GAS

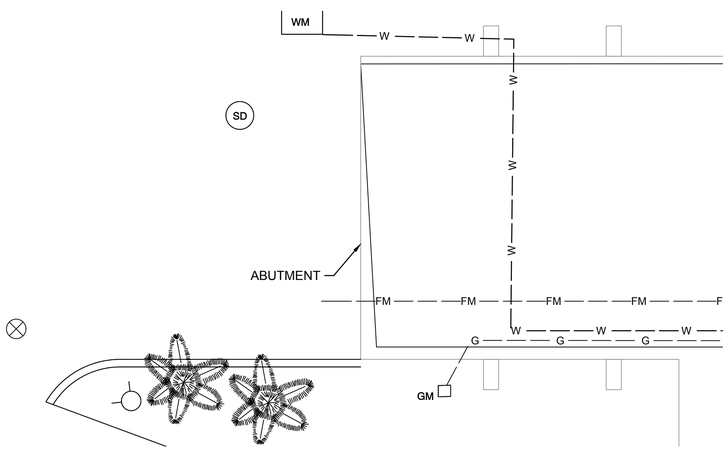

2 - ABUTMENT UTILITY PLAN
SCALE: 1" = 5'

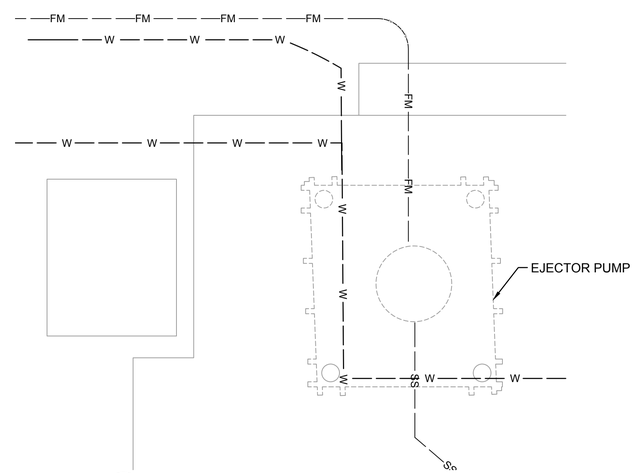

3 - BOAT SHOP UTILITY PLAN
SCALE: 1" = 5'

5' 0' 5' 10'
SCALE: 1"=5'

30' 0' 30' 60'
SCALE: 1"=30'

CITY OF CAPITOLA
INCORPORATED 1949

Mark	Description	Date	Appr

CAPITOLA WHARF RESILIENCY AND PUBLIC ACCESS IMPROVEMENT PHASE 2

EXISTING UTILITY PLAN

moffatt & nichol
2185 N. CALIFORNIA BLVD.
SUITE 500
WALNUT CREEK, CA 94596

Designed by: BP
Cad by: BP
Dwn by: AC
Reviewed by:
Submitted by: MOFFATT & NICHOL
Date: 5/19/2023
M&N Project No.: 915401
Drawing code:
Drawing Scale:
Plot scale: 1:1 (D SHEET)
Rev:

REGISTERED PROFESSIONAL ENGINEER
BRADFORD A. PORTER
No. 042735
Exp. 3-31-24
CIVIL
STATE OF CALIFORNIA
SEAL

Sheet Reference No.
U-001
INDEX: 27 OF 37

File: Q:\WC\915401 capitola wharf beach\4_CADD_Active_Wharf_sheet set\915401-U-001 , Plotted: 5/19/2023 11:23 AM by: ESTRADA, JUSTIN , Saved: 5/19/2023 11:17 AM by: JESTRADA

DRAWING SCALES SHOWN BASED ON 22"x34" DRAWING

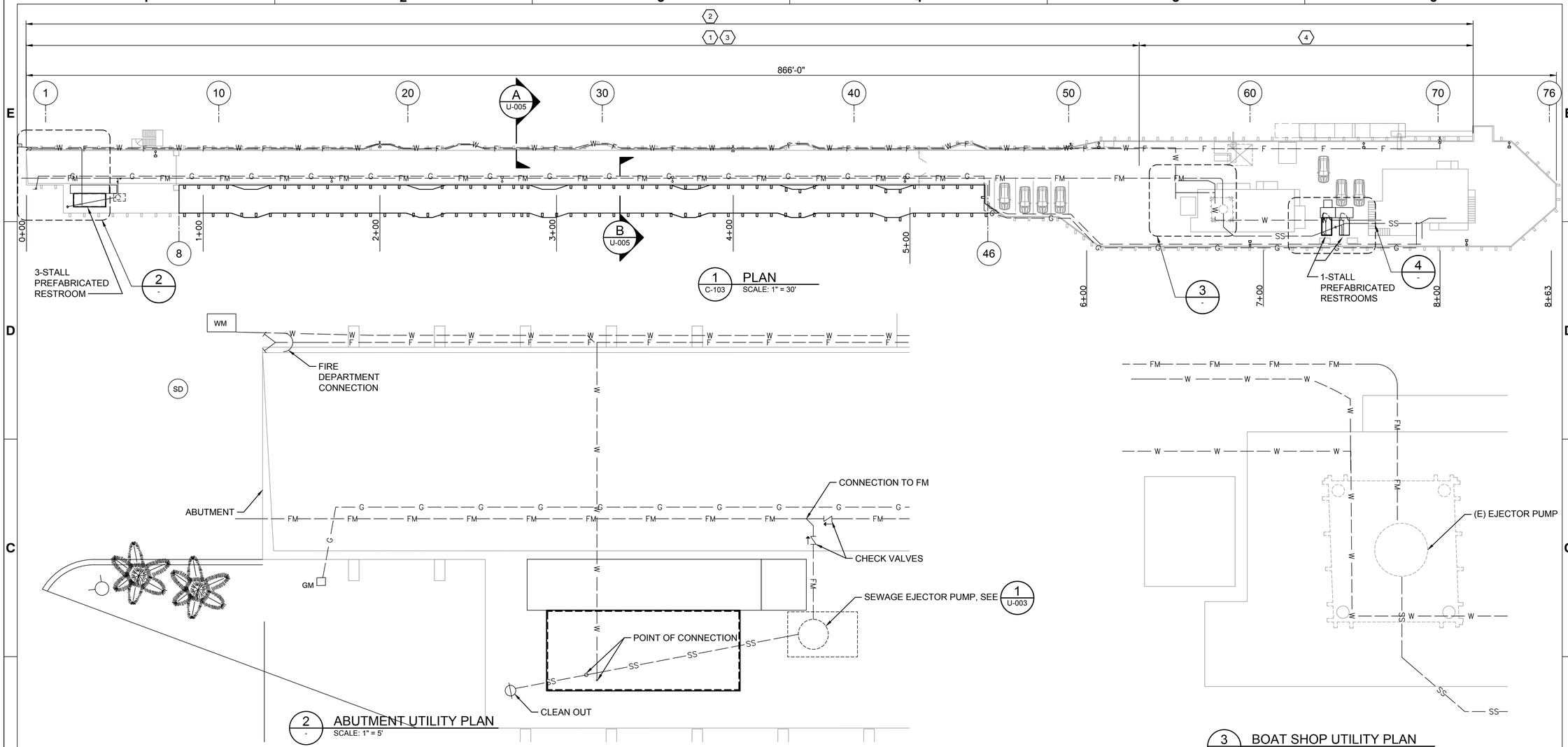

1 C-103 PLAN
SCALE: 1" = 30'

2 - ABUTMENT UTILITY PLAN
SCALE: 1" = 5'

3 - BOAT SHOP UTILITY PLAN
SCALE: 1" = 5'

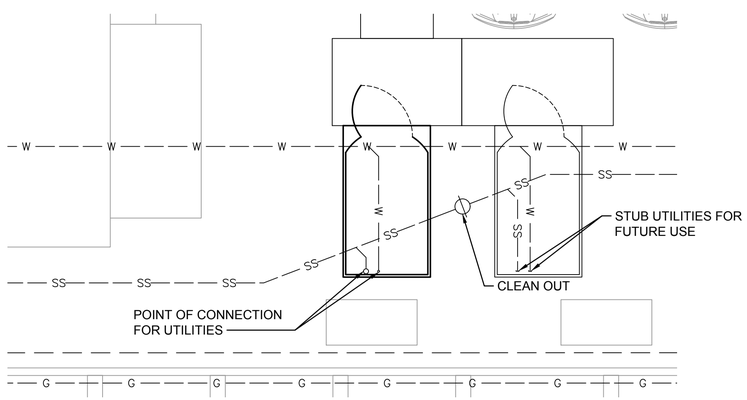

4 - RESTROOM AT HEAD OF WHARF UTILITY PLAN
SCALE: 1" = 5'

LEGEND

- W — WATER
- FM — FORCE MAIN
- SS — SANITARY SEWER
- G — GAS
- F — FIRE
- CLEAN OUT
- CHECK VALVE
- FIRE DEPARTMENT CONNECTION

KEYNOTES:

1. REMOVE (E) WATER AND F&I (N) WATER FROM BENT 1 TO BENT 54 AND CONNECT TO (E) LINE
2. F&I 3 INCH FIRE DRY STANDPIPE FROM BENT 1 TO BENT 72
3. REMOVE (E) UTILS: GAS, SSFM AND F&I (N) GAS, SSFM FROM BENT 1 TO BENT 54 AND CONNECT TO (E) LINES.
4. REPLACE ALL DAMAGED PIPES AS DIRECTED BY THE CITY'S REPRESENTATIVE.

5' 0' 5' 10'
SCALE: 1"=5'

30' 0' 30' 60'
SCALE: 1"=30'

Mark	Description	Date	Appr.

CAPITOLA WHARF RESILIENCY AND PUBLIC ACCESS IMPROVEMENT PHASE 2

PROPOSED UTILITY PLAN

Designed by: BP	Date: 5/19/2023		Rev.
Dwn by: AC	Ckd by: BP	M&N Project No.: 9154-01	
Reviewed by:		Drawing code:	
Submitted by: MOFFATT & NICHOL		Drawing Scale: 1:1 (D SHEET)	
		Plot scale: 1:1 (D SHEET)	

moffatt & nichol
2185 N. CALIFORNIA BLVD.
SUITE 500
WALNUT CREEK, CA 94596

REGISTERED PROFESSIONAL ENGINEER BRADFORD A. POLLER No. 042735 Exp. 3-31-24 CIVIL STATE OF CALIFORNIA
SEAL

Sheet Reference No.
U-002
INDEX: 28 OF 37

File: Q:\WC\9154-01 capitola wharf beach\4_CADD_Active_Wharf_sheet set\9154-01-U-002 - Plotted: 5/19/2023 11:23 AM by: ESTRADA, JUSTIN - Saved: 5/19/2023 11:18 AM by: JESTRADA

DRAWING SCALES SHOWN BASED ON 22"x34" DRAWING

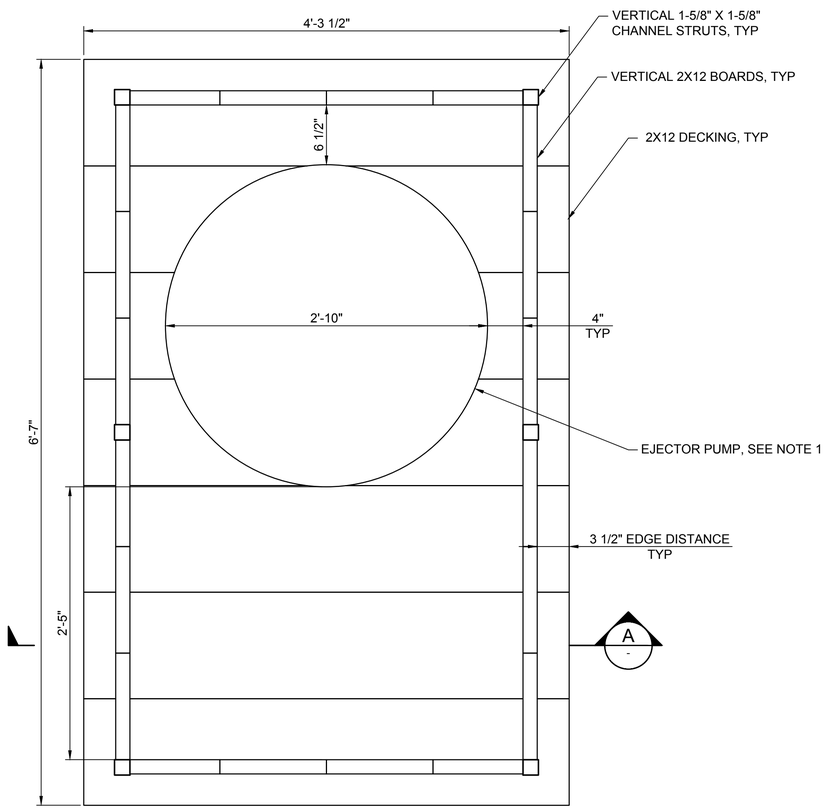

1 / C-103 SEWAGE EJECTOR PUMP PLAN
SCALE: 1 1/2" = 1'-0"
U-002

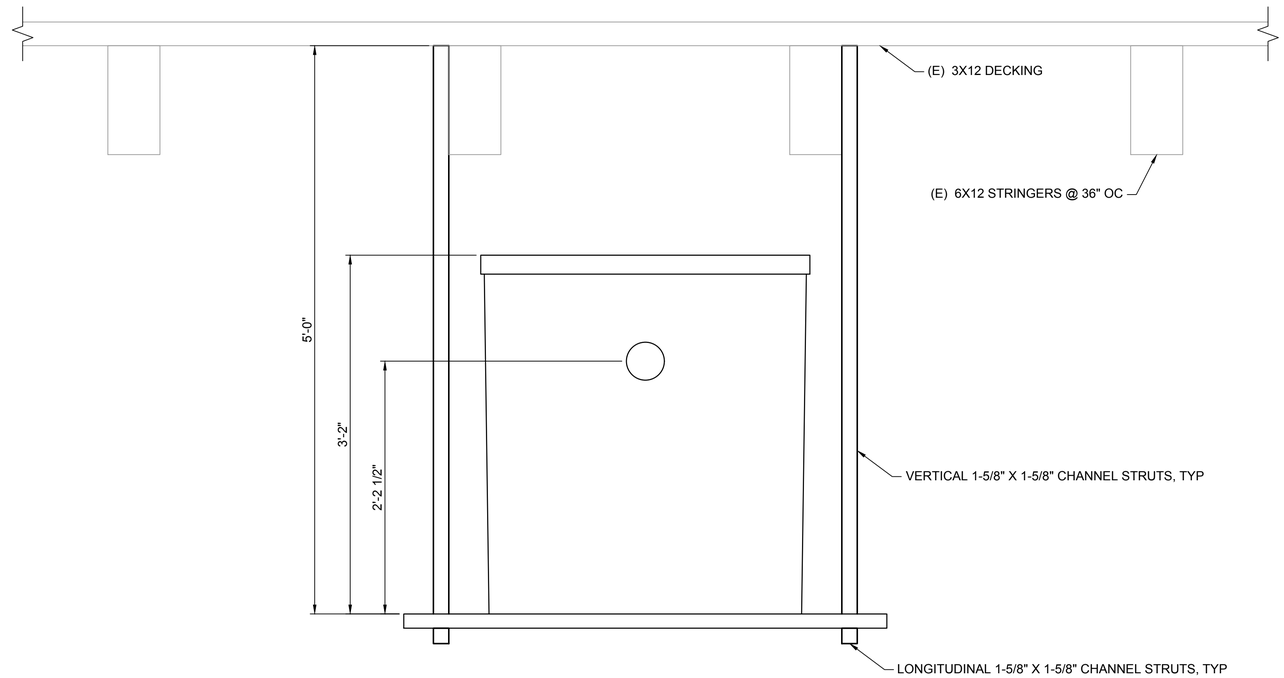

A / - SEWAGE EJECTOR PUMP SECTION
SCALE: 1 1/2" = 1'-0"

NOTES:

1. EJECTOR PUMP SHALL HAVE 50 GALLON CAPACITY. PROVIDE LIBERTY PUMPS PRO680 SERIES, MODEL NO: P682XLE52W-2 OR APPROVED EQUAL
2. THE EJECTOR PUMP SHOULD BE LOCATED OUTSIDE OF RESTROOM AND RAMP FOOTPRINTS. THE CONTRACTOR IS TO CONFIRM THE LOCATION OF THE EJECTOR PUMP WITH THE CITY'S REPRESENTATIVE.
3. CUT TIMBER MEMBERS TO FIT DIMENSIONS.

1'-0" 0'-0" 6" 1'-0"
SCALE: 1 1/2"=1'-0"

Mark	Description	Date	Appr

CAPITOLA WHARF RESILIENCY AND PUBLIC ACCESS IMPROVEMENT PHASE 2

SEWAGE EJECTOR PUMP NEAR ABUTMENT

moffatt & nichol
2185 N. CALIFORNIA BLVD.
SUITE 500
WALNUT CREEK, CA 94596

Designed by: BP
Date: 5/19/2023
Rev:
Dwn by: JE
Ckd by: BP
M&N Project No.: 9154-01
Reviewed by:
Drawing code:
Submitted by: MOFFATT & NICHOL
Drawing Scale:
Plot scale: 1:1 (D SHEET)

REGISTERED PROFESSIONAL ENGINEER BRADFORD A. PORTER No. 042735 Exp. 3-31-24 CIVIL STATE OF CALIFORNIA
SEAL

Sheet Reference No.
U-003
INDEX: 29 OF 37

File: Q:\WC\9154-01 capitola wharf beach\4_CADD_Active_Wharf_sheet set\9154-01-U-003 ; Plotted: 5/19/2023 11:23 AM by ESTRADA, JUSTIN ; Saved: 5/19/2023 11:18 AM by JESTRADA

DRAWING SCALES SHOWN BASED ON 22"x34" DRAWING

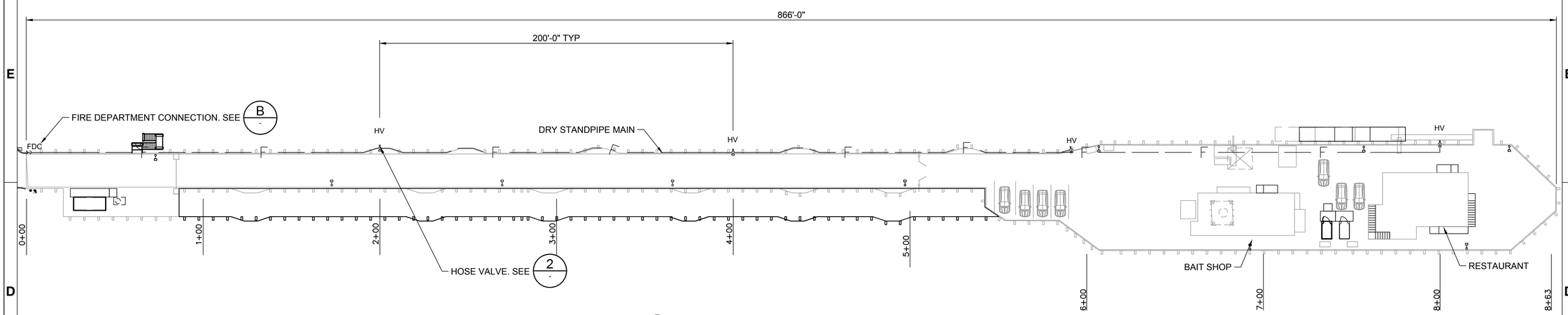

1 C-103 PLAN
SCALE: 1" = 30'

LEGEND

- FIRE DEPARTMENT CONNECTION
- HOSE VALVE
- DRY STANDPIPE MAIN

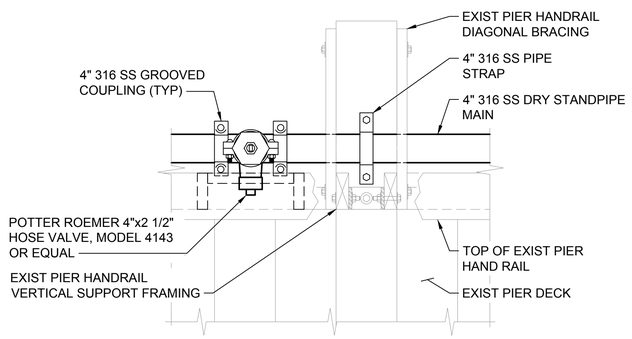

2 - HOSE VALVE PLAN
SCALE: NOT TO SCALE

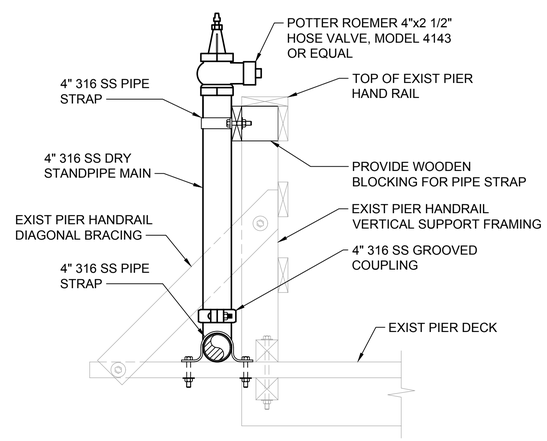

A - HOSE VALVE ELEVATION
SCALE: NOT TO SCALE

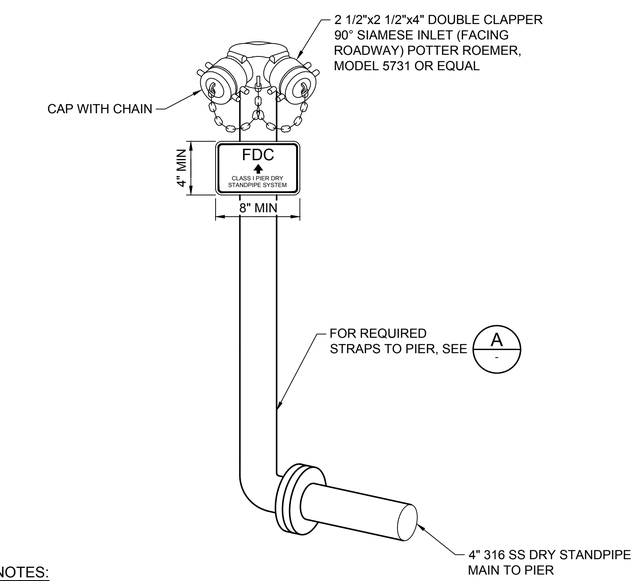

NOTES:

1. DIP DSP RISER SHALL BE SUPPORTED AT THE BOTTOM ELL OF THE RISER
2. FDC SIGN SHALL BE MOUNTED ON FDC RISER. LETTERING SHALL BE AT LEAST 1" HIGH AND HAVE CLEARLY CONTRASTING BACKGROUND.
3. THE FDC ON THE PIER (THIS DETAIL) SHALL BE CONSTRUCTED BY OTHERS.
4. CONTRACTOR SHALL BE RESPONSIBLE FOR TESTING AND PERMITTING OF THE PIER MANUAL DRY STANDPIPE SYSTEM, INCLUDING THIS FDC, AS IT CONSTITUTES A PART OF THE PIER MANUAL DRY STANDPIPE SYSTEM.

B - FIRE DEPT CONNECTION DETAIL
SCALE: NOT TO SCALE

30' 0' 30' 60'
SCALE: 1"=30'

CITY OF CAPITOLA
INCORPORATED 1949

Mark	Description	Date	Appr

CAPITOLA WHARF RESILIENCY AND PUBLIC ACCESS IMPROVEMENT PHASE 2

FIRE STANDPIPE PLAN

moffatt & nichol
2185 N. CALIFORNIA BLVD.
SUITE 500
WALNUT CREEK, CA 94596

Designed by: DM	Date: 5/19/2023
Dwn by: AC	Ckd by: BP
Reviewed by:	Drawing code:
Submitted by: MOFFATT & NICHOL	Drawing Scale: 1:1 (D SHEET)
	Plot scale:
	Rev.
	M&N Project No. : 9154-01

REGISTERED PROFESSIONAL ENGINEER
BRADFORD A. POTTER
No. 042735
Exp. 3-31-24
CIVIL
STATE OF CALIFORNIA
SEAL

Sheet Reference No.
U-004
INDEX: 30 OF 37

File: Q:\WC\9154-01 capitola wharf beach\4_CADD_Active_Wharf_sheet set\915401-U-004 ; Plotted: 5/19/2023 11:23 AM by: ESTRADA, JUSTIN ; Saved: 5/19/2023 11:18 AM by: JESTRADA

DRAWING SCALES SHOWN BASED ON 22"x34" DRAWING

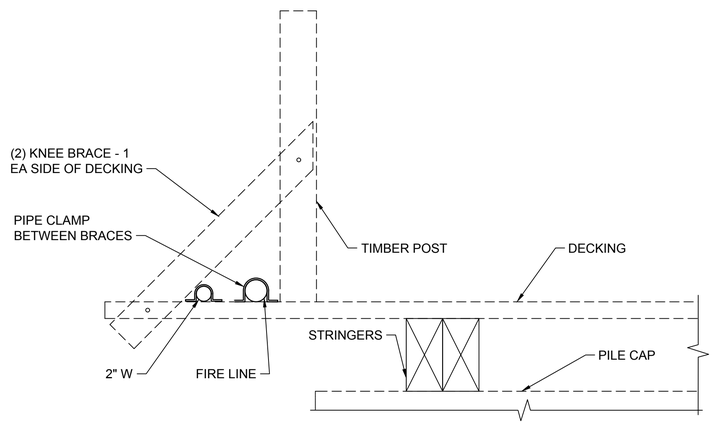

A U-002 UTILITIES IN KNEE
SCALE: 1:1000_XREF

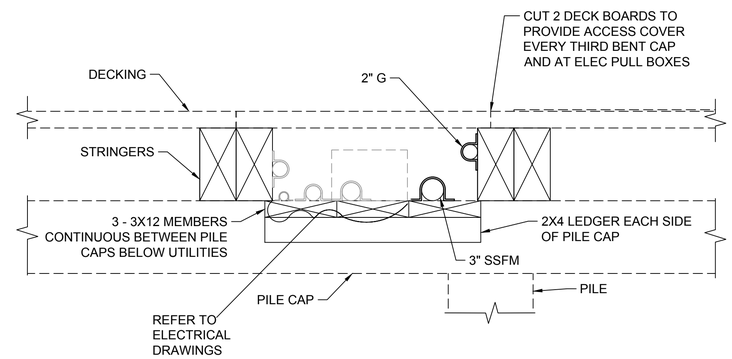

B U-002 UTILITY CHASE BELOW DECK
SCALE: 1:1000_XREF

1'-0" 0' 1'-0" 2'-0"
SCALE: 1"=1'-0"

Mark	Description	Date	Appr

CITY OF CAPITOLA
INCORPORATED 1949

CAPITOLA WHARF RESILIENCY AND PUBLIC ACCESS IMPROVEMENT PHASE 2

UTILITY DETAILS

Rev.
Date: 5/19/2023
M&N Project No.: 9154-01
Drawing code:
Drawing Scale: Plot scale: 1:1 (D SHEET)
Designed by: BP
Dwn by: AC
Ckd by: BP
Reviewed by:
Submitted by: MOFFATT & NICHOL

moffatt & nichol
2185 N. CALIFORNIA BLVD.
SUITE 500
WALNUT CREEK, CA 94596

REGISTERED PROFESSIONAL ENGINEER
BRADFORD A. POLLEY
No. 042735
Exp. 3-31-24
CIVIL
STATE OF CALIFORNIA
SEAL

Sheet
Reference No.
U-005
INDEX: 31 OF 37

File: Q:\WC\9154-01 capitola wharf beach\4_CADD_Active_Wharf_sheet set\9154\01-U-005 ; Plotted: 5/19/2023 11:23 AM by ESTRADA, JUSTIN ; Saved: 5/19/2023 11:18 AM by ACANEPA

DRAWING SCALES SHOWN BASED ON 22"x34" DRAWING

ELECTRICAL GENERAL NOTES

1. GENERAL CONDITIONS:
   A. UNDER THIS SECTION THE CONTRACTOR SHALL PROVIDE ALL LABOR, MATERIAL, EQUIPMENT, APPURTENANCES, SERVICES AND SUPERVISION FOR A COMPLETE ELECTRICAL SYSTEM AS SHOWN ON THE DRAWING. ALL MATERIAL AND EQUIPMENT SHALL BE WORKED INTO A COMPLETE, CONVENIENT, AND ECONOMICAL SYSTEM OR SYSTEMS. ALL APPARATUS, PARTS, MATERIAL, AND ACCESSORIES WHICH ARE NECESSARY TO ACCOMPLISH THIS RESULT SHALL BE PROVIDED. MANUFACTURER'S INSTRUCTIONS, WRITTEN OR OTHERWISE, SHALL BE FOLLOWED, UNLESS SUPERSEDED HERE IN. ALL ITEMS SHOWN ARE NEW AND SHALL BE PROVIDED BY THE CONTRACTOR UNLESS SPECIFICALLY INDICATED OTHERWISE.
   B. "PROVIDE" IS DEFINED TO MEAN THAT THE CONTRACTOR SHALL FURNISH, INSTALL, ADJUST, TEST AND INTEGRATE INTO A COMPLETE SYSTEM THE ITEM INDICATED. INCLUDING ALL HARDWARE WIRING, AND MISCELLANEOUS ITEMS AS NECESSARY FOR A COMPLETE AND OPERATIONAL SYSTEM.
   C. CONTRACTOR SHALL GIVE REQUIRED NOTICES, OBTAIN NECESSARY PERMITS, AND PAY PERMIT FEES.
   D. THE DRAWINGS INDICATE DIAGRAMMATICALLY THE EXTENT OF THE WORK. MINOR VARIATIONS IN LOCATION OF EQUIPMENT SHALL BE MADE UPON WRITTEN APPROVAL OF THE ENGINEER AT NO ADDITIONAL CHARGE. REFER TO ARCHITECTURAL, STRUCTURAL, AND CIVIL DRAWINGS FOR GUIDANCE ON DIMENSION, DETAILS, AND LOCATIONS OF DUCTS AND PIPES. INSTALL THE ELECTRICAL SYSTEMS WITHOUT INTERFERING WITH PIPES, STRUCTURAL STEEL, OR OTHER SYSTEMS.
   E. ALL DIMENSIONS AND ELEVATIONS NOTED ARE ENGLISH UNITS UNLESS OTHERWISE NOTED.
   F. COOPERATE AND COORDINATE THE WORK OF THIS DIVISION WITH OTHER TRADES.
   G. ALL WORK TO CONFORM TO THE LATEST EFFECTIVE PUBLICATIONS OF THE FOLLOWING STANDARDS, CODES, ETC. FORM A PART OF THESE SPECIFICATIONS UON:

      ALL STATE AND LOCAL BUILDING CODES.
      SERVICE RULES AND REGULATIONS OF ALABAMA POWER.
      AMERICAN NATIONAL STANDARDS INSTITUTE (ANSI).
      ASTM INTERNATIONAL (ASTM).
      BUILDING INDUSTRY CONSULTING SERVICE INTERNATIONAL (BICSI).
      INTERNATIONAL BUILDING CODE (IBC).
      INTERNATIONAL FIRE CODES (IFC).
      INSTITUTE OF ELECTRICAL AND ELECTRONIC ENGINEERS (IEEE).
      NATIONAL ELECTRICAL MANUFACTURER'S ASSOCIATION (NEMA).
      NATIONAL FIRE PROTECTION ASSOCIATION (NFPA).
      NATIONAL ELECTRICAL CODE (NEC); 2020
      TELECOMMUNICATIONS INDUSTRY ASSOCIATION (TIA).
      UNDERWRITERS LABORATORIES (UL).
      ILLUMINATING ENGINEERING SOCIETIES (IES).

   H. IT IS THE RESPONSIBILITY OF THE OWNER TO MAINTAIN THE INTEGRITY OF THE SYSTEMS. CONTRACTOR SHALL PROVIDE OWNER WITH COMPLETE OPERATION AND MAINTENANCE INFORMATION FROM EQUIPMENT MANUFACTURERS.
   I. SHOULD THERE BE A CONFLICT BETWEEN THESE GENERAL NOTES, WORKING DRAWINGS, AND/OR SPECIFICATIONS, THE MOST RESTRICTIVE INTERPRETATION SHALL PREVAIL. THE CONTRACTOR SHALL BE RESPONSIBLE FOR OBTAINING FROM THE OWNER REPRESENTATIVE ANY CLARIFICATION OR INTERPRETATION OF THE GENERAL NOTES, WORKING DRAWINGS, AND/OR SPECIFICATIONS IN WRITING AND IN ADVANCE OF THE BEGINNING OF DEMOLITION/CONSTRUCTION.
   J. EXISTING CONSTRUCTION, INCLUDING UTILITIES AND OTHER MISCELLANEOUS ITEMS WHICH ARE TO REMAIN, SHALL REMAIN UNDISTURBED AND BE PROTECTED, UNLESS OTHERWISE NOTED.
   K. AREAS DISTURBED DURING DEMOLITION/CONSTRUCTION SHALL BE REPAIRED BY THE CONTRACTOR TO THEIR ORIGINAL CONDITION, AT NO ADDITIONAL EXPENSE TO THE OWNER, UNLESS OTHERWISE NOTED.
   L. LIMITED STAGING AREAS SHALL BE PROVIDED ON SITE FOR CONTRACTOR'S USE. THE CONTRACTOR SHALL CONFIRM THE EXTENTS OF STAGING AREAS WITH THE OWNERS REPRESENTATIVE.

2. GENERAL DEMOLITION NOTES
   A. MATERIAL BEING REMOVED UNDER DEMOLITION (AND NOT TO BE RELOCATED) SHALL BECOME THE PROPERTY OF THE CONTRACTOR AND SHALL BE REMOVED COMPLETELY FROM THE SITE, UON.
   B. CONTRACTOR SHALL EXERCISE CARE IN REMOVING DEMOLITION ITEMS AND SHALL REPAIR OR REPLACE AT THEIR COST ANY DAMAGE CAUSED TO EXISTING CONSTRUCTION AND EQUIPMENT TO REMAIN.
   C. CONTRACTOR SHALL REMOVE STARTERS, DISCONNECT SWITCHES AND ASSOCIATED WIRE AND CONDUIT FOR EQUIPMENT TO BE REMOVED OR RELOCATED BY OTHERS.
   D. FOR EQUIPMENT AND DEVICES TO BE REMOVED AND NOT REINSTALLED SHALL HAVE ALL JUNCTION BOXES, WIRE, CONDUIT AND ASSOCIATED APPURTENANCES REMOVED BACK TO THE LAST LIVE JUNCTION BOX, PANELBOARD OR SOURCE.

3. GENERAL MATERIAL REQUIREMENTS:
   A. EQUIPMENT AND PRODUCTS TO BE USED SHALL BE REVIEWED AND APPROVED BY OWNER PRIOR TO PLACING ORDER OR PURCHASE.
   B. ALL MATERIALS AND EQUIPMENT SHALL BE NEW AND SHALL BEAR THE LABEL OF A NATIONALLY RECOGNIZED TESTING AGENCY AND SHALL BE INSTALLED IN THE MANNER FOR WHICH IT IS DESIGNED AND APPROVED.
   C. ALL MATERIAL, INCLUDING PULL BOXES, CONDUIT BODIES, FITTINGS AND MOUNTING HARDWARE INSTALLED OUTSIDE SHALL BE APPROVED WEATHER TIGHT CORROSION RESISTANT (316 STAINLESS STEEL), UNLESS NOTED OTHERWISE.
   D. CONTRACTOR SHALL INSPECT MATERIALS DELIVERED TO SITE FOR DAMAGE. UNLOAD AND STORE WITH MINIMUM HANDLING. STORE MATERIALS ON SITE IN ENCLOSURES OR UNDER PROTECTIVE COVERING. STORE PLASTIC PIPING UNDER COVER OUT OF DIRECT SUNLIGHT. DO NOT STORE MATERIALS DIRECTLY ON THE GROUND. KEEP INSIDE OF CONDUITS, FITTINGS AND EQUIPMENT FREE OF DIRT AND DEBRIS. HANDLE CONDUIT, FITTINGS, AND OTHER ACCESSORIES IN SUCH MANNER AS TO ENSURE DELIVERY TO THE INSTALLATION LOCATION IN A SOUND UNDAMAGED CONDITION.
   E. SUPPORTS AND HARDWARE SHALL BE 316 STAINLESS STEEL. SUBMIT SHOP DRAWINGS OR CATALOG DATA FOR REVIEW AND APPROVAL. A DIELECTRIC ISOLATION SHEET SHALL BE PLACED WHERE DISSIMILAR METALS CONTACT ON THE SUPPORT. INCLUDE LOCKWASHERS.
   F. PANELBOARDS, ENCLOSED CIRCUIT BREAKERS AND SAFETY SWITCHES, WHEN APPLICABLE, SHALL BE MANUFACTURED BY THE SAME MANUFACTURER. WIRING DEVICES SHALL BE MANUFACTURED BY ONE MANUFACTURER.
   G. SUBSTITUTION OF MATERIAL AND EQUIPMENT: THE NAME OF A CERTAIN BRAND, MAKE, MANUFACTURER OR DEFINITE SPECIFICATION IS TO DENOTE THE QUALITY STANDARD OF ARTICLE DESIRED. SUBSTITUTION OF ANY OTHER BRAND, MAKE, OR MANUFACTURER, WHICH IN THE OPINION OF THE ENGINEER IS RECOGNIZED THE EQUAL OF THAT SPECIFIED MAY BE ACCEPTED.
   H. PROVIDE ENGRAVED PLASTIC NAMEPLATES ON ALL DISTRIBUTION EQUIPMENT AND PANELS, SECURED BY MEANS OF STAINLESS STEEL RIVETS. TAPES AND ADHESIVES ARE NOT ACCEPTABLE.
   I. UNLESS NOTED OTHERWISE, ALL PANEL BUSES, FEEDER CONDUCTORS AND BRANCH CIRCUIT WIRING SHALL BE COPPER. ALL WIRE SHALL BE UL LISTED, RATED FOR 600 VOLTS, NO. 12 MINIMUM SIZE, UNLESS NOTED OTHERWISE.
   J. ALL CIRCUIT BREAKERS, FUSES AND ELECTRICAL EQUIPMENT SHALL HAVE AN INTERRUPTING RATING NOT LESS THAN THE MAXIMUM SHORT CIRCUIT CURRENT TO WHICH THEY MAY BE SUBJECTED.

4. GENERAL INSTALLATION REQUIREMENTS:
   A. INSTALL MATERIALS AND EQUIPMENT IN FIRST CLASS AND WORKMANLIKE MANNER AND IN ACCORDANCE WITH NECA STANDARD 101-2013. RUN CONCEALED, EXCEPT AS INDICATED.
   B. POWER WIRING AND POWER CONNECTIONS TO EQUIPMENT SHALL BE PROVIDED UNDER "ELECTRICAL" UNLESS OTHERWISE INDICATED ON THE ELECTRICAL DRAWINGS. WHEN SUBSTITUTED MOTORS AND/OR EQUIPMENT REQUIRES ELECTRICAL MODIFICATIONS, THE COST OF THE ELECTRICAL MODIFICATIONS AND COORDINATION SHALL BE INCLUDED UNDER THE DIVISION PROVIDING THE MOTOR AND/OR EQUIPMENT.
   C. THE ELECTRICAL CONTRACTOR SHALL NOT BORE, NOTCH OR IN ANY WAY CUT INTO ANY STRUCTURAL MEMBER, WITHOUT APPROVAL FROM THE ENGINEER. THE ELECTRICAL CONTRACTOR SHALL PROVIDE SUPPORT FOR ALL ELECTRICAL EQUIPMENT TO COMPLY WITH THE REQUIREMENTS OF THE LATEST ADOPTED BUILDING CODE AND ALL LOCAL ORDINANCES.
   D. SCHEDULING, TRENCHING, LINE SHUTDOWN, DRAINAGE, TIE-IN, CONDUIT BEDDING, SUPPORTS, INSTALLATION OF NEW LINE, WALL PENETRATIONS, AND EQUIPMENT PLACEMENTS, TESTING, WARNING TAPE, BACKFILL, SURFACING, LANDSCAPING, ACTIVATION OF SERVICE, ETC., SHALL COMPLY WITH THE LOCAL BUILDING CODE STANDARDS AND REGULATIONS AND SHALL BE COORDINATED WITH THE LOCAL CODE OFFICIAL AND THE FIRE DEPARTMENTS. PRIOR APPROVAL OF AND NOTICE TO PROCEED WITH CONCEALING ELECTRICAL WIRING AND FINAL CONNECTIONS ARE REQUIRED BY THE LOCAL AUTHORITY HAVING JURISDICTION.
   E. CONTRACTOR SHALL VERIFY ALL EXISTING UTILITY LOCATIONS IN THE FIELD BEFORE STARTING WORK. THE REGIONAL NOTIFICATION CENTER (AND/OR PROPERTY OWNERS) SHALL BE NOTIFIED PRIOR TO THE START OF SHUTDOWN, DIGGING OR EXCAVATION WORK. THE CONTRACTOR SHALL FIELD VERIFY THE POINTS OF CONNECTIONS AND PHASED CONSTRUCTION TIE-INS. LOCATIONS OF PIPING AND APPURTENANT FITTINGS SHOWN ON THE DRAWINGS ARE APPROXIMATE. IT IS INTENDED THAT SUCH ITEMS BE LOCATED BASED ON EXACT LOCATIONS DETERMINED IN THE FIELD AND THE SUPPLIED MATERIALS.
   F. CONTRACTOR SHALL PROVIDE ALL NECESSARY PROTECTIVE MEASURES TO SAFEGUARD EXISTING UTILITIES TO REMAIN FROM DAMAGE DURING CONSTRUCTION OF THIS PROJECT. SHOULD SPECIAL EQUIPMENT BE REQUIRED TO WORK OVER AND AROUND THE UTILITIES, CONTRACTOR SHALL BE REQUIRED TO FURNISH SUCH EQUIPMENT. THE COST OF PROTECTING UTILITIES FROM DAMAGE AND FOR FURNISHING SPECIAL EQUIPMENT SHALL BE INCLUDED IN THE PRICE BID.
   G. THE ELECTRICAL CONTRACTOR SHALL INSTALL ALL CONDUITS AND WIRES WITH A MINIMUM NUMBER OF BENDS AND IN SUCH A MANNER AS TO CONFORM TO THE STRUCTURE. AVOID OBSTRUCTIONS, AND MEET ALL STRUCTURAL CODE REQUIREMENTS. THESE DRAWINGS ARE PRIMARILY DIAGRAMMATIC, AND DO NOT SHOW ALL SUCH REQUIRED BENDS, OFFSETS, FITTING, BOXES, ETC.
   H. THE ENTIRE ELECTRICAL INSTALLATION SHALL BE GROUNDED AS REQUIRED BY NATIONAL ELECTRICAL CODE. POWER CONDUITS SHALL HAVE A INSULATED COPPER, CODE SIZED GROUND WIRE INSTALLED.
   I. VEHICULAR ACCESS MUST BE PROVIDED AND MAINTAINED SERVICEABLE THROUGHOUT CONSTRUCTION.
   J. DIELECTRIC COUPLINGS/FLANGES SHALL BE USED AT DISSIMILAR METAL PIPING CONNECTIONS, POSTS.
   K. SUPPORTS AND HANGERS SHALL BE 316 STAINLESS STEEL (UNLESS OTHERWISE NOTED) AND SHALL BE FROM MANUFACTURED SHAPES. FIELD BENDING IS NOT PERMITTED. PLATE MATERIAL MAY BE WELDED IN THE FIELD TO FORM SHAPES.

4. CONDUIT REQUIREMENTS:
   A. BURIED CONDUIT LINES SHALL HAVE PLASTIC WARNING TAPE MEETING APWA STANDARDS WITH METALLIC CORE OR METAL FACED PLACED IN TRENCH ABOVE DUCTBANK. THE TAPE SHALL BE PLACED 9 INCHES TO 12 INCHES BELOW FINISHED GRADE.
   B. ALL CONDUIT SHALL FOLLOW THE GENERAL ARRANGEMENT SHOWN. CONDUIT SHALL BE RUN ESSENTIALLY AS INDICATED, WITH CARE BEING TAKEN TO AVOID INTERFERENCE WITH OTHER PIPING, CONDUIT OR EQUIPMENT. BEFORE JOINTING AND INSTALLATION OF CONDUIT, THOROUGHLY CLEAN INTERIORS OF CONDUIT, AND COMPONENTS. MAINTAIN CLEANLINESS BY CLOSURE OF CONDUIT OPENINGS WITH CAPS OR PLUGS.
   C. THE CONTRACTOR SHALL ENSURE SUFFICIENT CONDUIT FLEXIBILITY AND ANCHORAGE IS PROVIDED FOR ALL LINES FOR THERMAL EXPANSION AND CONTRACTION, PRESSURE AND FLEXING. THE STRUCTURE AND COMPONENTS SHALL ACCOMMODATE THE CONDUIT LAYOUT REQUIREMENTS SUCH THAT THE CONDUIT SHALL NOT BECOME OVERSTRESSED. THE CONDUIT SHALL BE PROPERLY SECURED IN ACCORDANCE WITH NEC.
   D. CONDUIT SHALL BE RUN CONCEALED, EXCEPT CONDUIT MAY BE EXPOSED AS APPROVED BY THE ENGINEER. WHERE FLEXIBILITY IS REQUIRED, PROVIDE LIQUID TIGHT FLEXIBLE METAL CONDUIT, UON. EXPOSED CONDUITS SHALL BE GALVANIZED RIGID STEEL, UNLESS OTHERWISE NOTED. LIQUID TIGHT FLEXIBLE METALLIC CONDUIT RUN EXPOSED SHALL BE RATED AS SUNLIGHT RESISTANT.
   E. CONDUIT RUN ON LAND SHALL BE BURIED A MINIMUM OF 24 INCHES BELOW FINISHED GRADE, UNLESS OTHERWISE NOTED. CONDUITS RUN BELOW SLAB ON GRADE SHALL BE BURIED A MINIMUM OF 12 INCHES BELOW SLAB, AND SHALL BE RIGID HOT DIPPED GALVANIZED STEEL CONDUIT PAINTED WITH TWO COATS OF BITUMASTIC PAINT, OR RIGID NON-METALLIC POLYVINYLCHLORIDE CONDUIT, MINIMUM SCHEDULE 80, AT THE OPTION OF THE CONTRACTOR, UNLESS OTHERWISE NOTED ON THE DRAWINGS.
   F. RIGID STEEL CONDUIT FITTINGS SHALL BE THREADED.
   G. MINIMUM SIZE CONDUIT SHALL BE 3/4", UON.
   H. FLEXIBLE CONDUIT SHALL BE GALVANIZED, SINGLE STRIP TYPE. IN AREAS SUBJECT TO MOISTURE, OR WHERE CALLED FOR ON THE DRAWINGS, FLEXIBLE CONDUIT SHALL HAVE A PLASTIC COVERING IN ACCORDANCE WITH NEC. FITTINGS SHALL BE STANDARD UL APPROVED WITH GROUND CONNECTOR. WATERTIGHT CONNECTORS SHALL BE USED WITH PLASTIC COVERED CONDUIT. FLEXIBLE CONDUIT, MINIMUM 18 INCHES/ MAXIMUM 48 INCHES IN LENGTH, SHALL BE USED FOR CONNECTIONS TO MOTORS, DRY TYPE TRANSFORMERS AND OTHER EQUIPMENT SUBJECT TO VIBRATION.
   I. EXPOSED CONDUITS SHALL BE RGS UON. EXPOSED CONDUIT SHALL BE RUN PARALLEL AND/OR PERPENDICULAR TO STRUCTURES AND SHALL BE SUPPORTED AS SPECIFIED AND IN ACCORDANCE WITH NEC.
   J. PROVIDE EXPANSION FITTINGS WHERE CONDUITS CROSS EXPANSION JOINTS. PROVIDE SLIP JOINTS AS NECESSARY FOR THERMAL EXPANSION AND CONTRACTION.
   K. CONDUIT TERMINATIONS AND CONDUIT STUBS SHALL HAVE INSULATING BUSHINGS.
   L. CONDUITS PASSING THROUGH BULKHEADS, CONCRETE WALLS, FLOORS OR FOOTINGS AND SLAB ON GRADE SHALL BE MADE WATERTIGHT. PROVIDE PIPE SLEEVES WITH ONE-HALF INCH MINIMUM CLEARANCE AROUND THE CONDUIT AND CAULK WITH SEALANT.
   M. PROVIDE 12" MINIMUM SEPARATION BETWEEN ELECTRICAL AND OTHER UTILITIES.
   N. EVERY SPARE CONDUIT SHALL HAVE A PULL STRING AND A #12 (MIN) COPPER TRACER WIRE INSTALLED, WITH INSULATION THAT IS NOT WHITE, GRAY, OR GREEN IN COLOR. THE TRACER WIRE MAY ALSO SERVE AS THE PULL STRING.

5. WIRING REQUIREMENTS:
   A. THE ENTIRE WIRING SYSTEM SHALL BE TESTED FOR SHORT CIRCUITS, GROUNDS AND INSULATION RESISTANCE BETWEEN CONDUCTORS AND TO GROUND PRIOR TO COMPLETION OF PROJECT.
   B. WIRES NO. 10 AND 12 AWG SHALL BE CONNECTED WITH COIL SPRING INSERT "WIRE-NUT" OR "WING-NUT" CONNECTORS MANUFACTURED BY IDEAL INDUSTRIES OR APPROVED EQUAL. CONNECTORS SHALL BE RATED 600 VOLTS.
   C. PROVIDE CABLE LUGS ON ALL CABLES AS REQUIRED TO PROPERLY TERMINATE ON THE EQUIPMENT AS NECESSARY.

6. PULL BOX REQUIREMENTS
   A. IN COMPLIANCE WITH UL50
   B. WHERE EXPOSED TO WET, DAMP, OR CORROSIVE ENVIRONMENTS, NEMA TYPE 3R.

7. GROUNDING
   A. GROUND RODS IN OTHER AREAS SHALL BE 3/4"x10' COPPER CLAD STEEL.
   B. PROVIDE EXOTHERMIC WELDS OR BURNDY HYGROUND COMPRESSIONS CONNECTORS FOR ALL GROUND ROD BONDS.

CITY OF CAPITOLA — INCORPORATED 1949

Mark	Description	Date	Appr

CAPITOLA WHARF RESILIENCY AND PUBLIC ACCESS IMPROVEMENT PHASE 2

ELECTRICAL NOTES

Designed by: BP
Date: 5/19/2023
Rev: -
Dwn by: DT
Ckd by: DNS
M&N Project No.: 9154-01
Reviewed by: KK
Drawing code:
Submitted by: MOFFATT & NICHOL
Drawing Scale:
Plot scale: 1:1 (D SHEET)

moffatt & nichol
2185 N. CALIFORNIA BLVD.
SUITE 500
WALNUT CREEK, CA 94596

REGISTERED PROFESSIONAL ENGINEER — BRADFORD A. PORTER — No. 042795 — Exp. 3-31-24 — CIVIL — STATE OF CALIFORNIA

SEAL

Sheet Reference No.
E-001
INDEX: 32 OF 37

File: Q:\WC\9154-01 capitola wharf beach\4_CADD_Active_Wharf_sheet set\9154\01-E-001 ; Plotted: 5/19/2023 11:23 AM by ESTRADA, JUSTIN ; Saved: 5/19/2023 11:18 AM by DSTINER

DRAWING SCALES SHOWN BASED ON 22"x34" DRAWING

ELECTRICAL GENERAL NOTES

1. UNLESS SPECIFICALLY NOTED TO BE EXISTING, ALL WORK AND MATERIAL SHOWN ARE NEW AND SHALL BE PROVIDED BY THE CONTRACTOR. THE CONTRACTOR SHALL FURNISH ALL LABOR, MATERIAL, EQUIPMENT, APPURTENANCES, SERVICES AND SUPERVISION FOR A COMPLETE ELECTRICAL SYSTEM AS SHOWN ON THE DRAWING. ALL MATERIAL AND EQUIPMENT SHALL BE WORKED INTO A COMPLETE, CONVENIENT, AND ECONOMICAL SYSTEM OR SYSTEMS. ALL APPARATUS, PARTS, MATERIAL, AND ACCESSORIES WHICH ARE NECESSARY TO ACCOMPLISH THIS RESULT SHALL BE PROVIDED AND SHALL INCLUDE OTHER EQUIPMENT SELECTIONS TO MEET THE PARAMETERS INDICATED. MANUFACTURER'S INSTRUCTIONS, WRITTEN OR OTHERWISE, SHALL BE FOLLOWED UNLESS SUPERSEDED HERE IN. ALL ITEMS SHOWN ARE NEW AND SHALL BE PROVIDED BY THE CONTRACTOR UNLESS SPECIFICALLY INDICATED OTHERWISE. ALL ACCOMPLISHED RESULTS SHALL BE PROVIDED AT NO ADDITIONAL COST OR TIME TO THE OWNER AND NO ADDITIONAL COST TO THE CONTRACT AMOUNT INCLUDING ALL HARDWARE WIRING, AND MISCELLANEOUS ITEMS AS NECESSARY FOR A COMPLETE AND OPERATIONAL SYSTEM.
2. PROVIDE IS DEFINED TO MEAN THAT THE CONTRACTOR SHALL FURNISH, INSTALL, ADJUST, TEST AND INTEGRATE INTO A COMPLETE SYSTEM THE ITEM INDICATED. INCLUDING ALL HARDWARE WIRING, AND MISCELLANEOUS ITEMS AS NECESSARY FOR A COMPLETE AND OPERATIONAL SYSTEM.
3. THE CONTRACTOR SHALL CLOSELY STUDY THE CONSTRUCTION SEQUENCE AND NOTES AS OUTLINED. SLIGHT DEVIATIONS FROM CONFINED WORK SPACES MAY BE NECESSARY TO FULLY COMPLETE A CONSTRUCTION AREA AS OUTLINED ON THAT SHEET. THE DEVIATIONS SHALL BE HELD TO A MINIMUM AND SHALL BE FULLY COORDINATED WITH THE OWNER. ALL SUCH DEVIATIONS SHALL BE MADE WITH NO ADDITIONAL COST TO THE OWNER.
4. THE CONTRACTOR SHALL VISIT THE SITE AND FAMILIARIZE HIMSELF/HERSELF WITH THE EXISTING CONDITIONS. DURING THE VISIT AND/OR DURING CONSTRUCTION, IF ANY CONFLICTS ARISE IN BETWEEN EXISTING CONDITIONS AND NEW WORK, IT SHALL BE THE RESPONSIBILITY OF THE CONTRACTOR TO PROVIDE SKETCHES TO THE ENGINEER OF RECORD ON THE CORRECTIVE MEASURES OF THE CONFLICT PRIOR TO THE WORK BEING PERFORMED. THE ENGINEER SHALL PROVIDE RECOMMENDATIONS BACK TO THE CONTRACTOR. IT IS THE RESPONSIBILITY OF THE CONTRACTOR TO EXECUTE THE SKETCHES WITH RECOMMENDATIONS, TO INCLUDE LABOR AND MATERIALS AT NO ADDITIONAL COST TIME TO THE OWNER AND NO ADDITIONAL COST TO THE CONTRACT AMOUNT.
5. CONDUIT ROUTINGS SHALL NOT INTERFERE WITH NEW OR EXISTING EQUIPMENT, PIPING, CONDUIT OR WORK AND SHALL NOT OBSTRUCT ACCESS TO ANY EQUIPMENT.
6. A SEPARATE EQUIPMENT GROUND CONDUCTOR SHALL BE INSTALLED WITH CIRCUITS. THE EQUIPMENT GROUND CONDUCTOR SHALL BE CONNECTED TO ALL DEVICES AND EQUIPMENT SUCH THAT REMOVAL OF ANY DEVICE OR EQUIPMENT CANNOT INTERRUPT THE CONTINUITY OF THE EQUIPMENT GROUNDING CONDUCTOR TO AND FROM OTHER DEVICES OR EQUIPMENT.
7. THE CONTRACTOR SHALL VERIFY LOCATION, SIZE, AND LOAD OF ALL EQUIPMENT BEING FURNISHED BY THE OTHERS BEFORE ROUGHING IN OF ANY CONDUIT. WHERE LOCATIONS OF EQUIPMENT ARE INSTALLED OTHER THAN INDICATED OR EQUIPMENT OF HIGHER OR LOWER LOADS IS INSTALLED, THE SIZE OF STARTERS, CIRCUITRY, PROTECTIVE DEVICES, AND ACCESSORIES SHALL BE ADJUSTED ACCORDINGLY AT NO ADDITIONAL COST TO THE OWNER.
8. WIRE AND CONDUIT FOR EQUIPMENT LOADS SHALL BE CONTINUOUS IN SIZE AND COUNT FROM THE SOURCE TO THE FINAL CONNECTION. SIZE AND COUNT SHALL BE AS INDICATED ON THE CIRCUIT HOMERUN, UNLESS OTHERWISE NOTED.
9. THE ELECTRICAL CONTRACTOR SHALL PROVIDE ALL POWER WIRING, CONDUIT, AND ASSOCIATED APPURTENANCE FOR EQUIPMENT PROVIDED BY OTHERS AND OTHER CONTRACTORS, UNLESS OTHERWISE NOTED.
10. THE ELECTRICAL CONTRACTOR SHALL EXAMINE THE CONTRACT DOCUMENTS AS A WHOLE. THE ELECTRICAL CONTRACTOR SHALL PROVIDE STARTERS, CIRCUITRY, PROTECTIVE DEVICES, AND ASSOCIATED APPURTENANCES FOR ALL EQUIPMENT REQUIRING POWER THAT IS NOT INDICATED ON THE ELECTRICAL DRAWINGS BUT INDICATED IN THE CONTRACT DOCUMENTS. THIS WORK SHALL BE PROVIDED AT NO ADDITIONAL COST TO THE OWNER.
11. PROVIDE SINGLE POINT GFCI RECEPTACLES. GFCI RECEPTACLES SHALL NOT BE WIRED FOR FEED THRU PROTECTION OF DOWNSTREAM RECEPTACLES.
12. PROVIDE GFCI RECEPTACLES WITHIN 6 FEET OF WATER SOURCES AND THE LIKE. WHERE CONDITIONS DO NOT ALLOW THE INSTALLATION OF GFCI RECEPTACLES, PROVIDE GFCI CIRCUIT BREAKERS.
13. PROVIDE TYPE WRITTEN DIRECTORIES IN PANELBOARDS COMPLETE WITH LOAD TYPE, AND LOCATIONS.
14. MOUNTING HEIGHTS OF LIGHTING FIXTURES ARE AS SCHEDULED OR INDICATED ON DRAWINGS. WHERE JOB CONDITIONS REQUIRE MOUNTING HEIGHTS DIFFERENT FROM THOSE SHOWN (SPECIFICALLY IN MECHANICAL ROOMS AND PLATFORM AREAS) TO AVOID PIPES, EQUIPMENT, STRUCTURAL FEATURES, DUCTWORK, OR OTHER SUCH CONDITIONS, SUCH CHANGES IN MOUNTING HEIGHT, SHALL BE AS DIRECTED OR REQUIRED WITHOUT ADDITIONAL COST TO THE OWNER.
15. MOUNTING HEIGHTS SHALL BE TO THE CENTER OF THE DEVICE INDICATED, UNLESS OTHERWISE NOTED. MOUNTING HEIGHTS OF DEVICES SHALL BE INSTALLED PER THE DRAWINGS AND IN COMPLIANCE WITH THE NATIONAL ELECTRICAL CODE AND AMERICANS WITH DISABILITIES ACT ACCESSIBILITY GUIDELINES (ADA-AG).
16. WHEREVER A NEW TO EXISTING CONNECTION IS REQUIRED, PROVIDE EXTENSION RINGS, SPLICES, WIRE, CONDUIT FITTINGS, AND ASSOCIATED APPURTENANCES. PERFORM ALL CUTTING AND PATCHING AS REQUIRED TO MAKE THE CONNECTIONS.
17. PAINT ALL SURFACE MOUNTED CONDUITS TO MATCH ADJACENT SURFACES, UNLESS OTHERWISE NOTED.
18. REPLACE ALL DAMAGED ELECTRICAL UTILITIES AS IDENTIFIED BY THE CITY'S REPRESENTATIVE.

ELECTRICAL LEGEND

ALL SYMBOLS ARE NOT NECESSARILY USED

- ELECTRICAL CONDUIT
- EXISTING ELECTRICAL CONDUIT
- UNDERGROUND ELECTRICAL CONDUIT
- EXISTING UNDERGROUND ELECTRICAL CONDUIT
- UNDERGROUND COMMUNICATION CONDUIT (COMM)
- COMMUNICATION CONDUIT
- SWITCHBOARD
- TRANSFORMER W/ HOUSE KEEPING PAD
- SOLAR POWERED WARNING LIGHT
- SOLAR MARINE DECK LIGHT
- SOLAR MARINE DOT LIGHT
- METER
- CURRENT TRANSFORMER
- SURGE PROTECTION DEVICE
- MOTOR/PUMP (# INDICATES HP)
- GFCI DUPLEX RECEPTACLE, IN-USE WEATHERPROOF ENCLOSURE AS NOTED
- PANELBOARD/UNIT SUBSTATION, AS IDENTIFIED
- GROUND FAULT PROTECTION RELAY. SHUNT TRIP CIRCUIT BREAKERS IN PEDESTALS CONTROLLED BY GROUND FAULT PROTECTION RELAY
- LIGHT POLE
- EXISTING UNDERGROUND MEDIUM VOLTAGE (FPL)
- EXISTING OVERHEAD WIRE
- ELECTRICAL DEMOLITION
- GROUND WIRE
- EXOTHERMIC CONNECTION
- GROUND ROD
- PULL BOX OR HANDHOLE AS NOTED
- DEMOLITION LIMITS
- EQUIPMENT AS NOTED
- NEW TO EXISTING CONNECTION
- KEY NOTE SYMBOL
- LIMITS OF DEMOLITION
- GROUND ELECTRODE
- METER ENCLOSURE
- CONDUIT STUB-OUT OR STUB-UP AND CAP, AS NOTED
- MARINE SUBSTATION
- CIRCUIT BREAKER
- DRY-TYPE TRANSFORMER
- PANELBOARD
- DISCONNECT SWITCH

ABBREVIATIONS

ALL ABBREVIATIONS ARE NOT NECESSARILY USED

1P	SINGLE POLE, OR AS INDICATED	KCMIL	THOUSAND CIRCULAR MILS
2P	TWO POLE, OR AS INDICATED	KWH	KILOWATT HOUR
3P	THREE POLE, OR AS INDICATED	KV	KILOVOLT
A	AMPERES	KVA	KILOVOLT AMPERE
AC	ALTERNATING CURRENT	KW	KILOWATT
AFF	ABOVE FINISHED FLOOR	LC	LANDSIDE CONTRACTOR
AIC	AMPERES INTERRUPTING CAPACITY	LTG	LIGHTING
AM	AMPERAGE METER/AMMETER	mA	MILLIAMP
AWG	AMERICAN WIRE GAGE	MCB/MB	MAIN CIRCUIT BREAKER
C, CND	CONDUIT	MECH	MECHANICAL
CATV	CABLE TELEVISION	MLO	MAIN LUG ONLY
CB	CIRCUIT BREAKER	N/A	NOT APPLICABLE (N/A)
CIP	CAST IN PLACE	NEUT	NEUTRAL WIRE
CKT	CIRCUIT	NEC	NATIONAL ELECTRICAL CODE
CO	CONDUIT ONLY	NIC	NOT IN CONTRACT
COMM	COMMUNICATIONS	NTS	NOT TO SCALE
CONC	CONCRETE	OC	ON CENTER
CT	CURRENT TRANSFORMER	P	POLE
DC	DIRECT CURRENT	PB	PULL BOX
DIA	DIAMETER	PC	PHOTOCELL
DWG	DRAWING	PH,Ø	PHASE
EC	EMPTY CONDUIT	PNL, PNBD	PANEL, PANELBOARD
EL, ELEV	ELEVATION	PVC	POLYVINYL CHLORIDE
ELEC	ELECTRIC/ELECTRICAL	PVMT	PAVEMENT
EX, EXIST	EXISTING	RECEPT	RECEPTACLE
FHC	FIRE HOSE CABINET	SC	SHORT CIRCUIT
FO	FIBER OPTIC	SCH	SCHEDULE
FVNR	FULL VOLTAGE NON-REVERSING	SPD	SURGE PROTECTION DEVICE
FVR	FULL VOLTAGE REVERSING	SS	STAINLESS STEEL
G, GND	GROUND	ST	SHUNT TRIP
GF	GROUND FAULT	SWBD	SWITCHBOARD
GFEP	GROUND FAULT EQUIPMENT PROTECTION	T/M	THERMAL MAGNETIC
GFI, GFCI	GROUND FAULT INTERRUPTER	TYP	TYPICAL
GFP	GROUND FAULT PROTECTION	UL	UNDERWRITERS LABORATORIES
HOA	HAND OFF AUTO SELECTOR SWITCH	UON	UNLESS OTHERWISE NOTED
HP	HORSE POWER	V	VOLT
HTR	HEATER	VIF	VERIFY IN FIELD
Hz	HERTZ, CYCLES PER SECOND	VERT	VERTICAL
INST	INSTRUMENT, INSTRUMENTATION	W	WATT
IT	INFORMATION TECHNOLOGY	WP	WEATHER PROOF
JBOX	JUNCTION BOX	XFMR	TRANSFORMER

Mark	Description	Date	Appr

CAPITOLA WHARF RESILIENCY AND PUBLIC ACCESS IMPROVEMENT PHASE 2

ELECTRICAL NOTES, ABBREVIATIONS, AND LEGEND

Rev: -
Date: 4/18/2023
M&N Project No.: 9154-01
Drawing code:
Drawing Scale:
Plot scale: 1:1 (D SHEET)

Designed by: BP
Dwn by: DT
Cad by: DNS
Reviewed by: KK
Submitted by: MOFFATT & NICHOL

moffatt & nichol
2185 N. CALIFORNIA BLVD.
SUITE 500
WALNUT CREEK, CA 94596

REGISTERED PROFESSIONAL ENGINEER BRADFORD A. POKERP No. 042735 Exp. 3-31-24 CIVIL STATE OF CALIFORNIA

SEAL

Sheet Reference No.

E-002

INDEX: 33 OF 37

File: Q:\WC\9154-01 capitola wharf beach\4_CADD_Active_Wharf_sheet set\9154-01-E-002 , Plotted: 5/19/2023 11:23 AM by: ESTRADA, JUSTIN , Saved: 5/19/2023 11:18 AM by: JESTRADA

DRAWING SCALES SHOWN BASED ON 22"x34" DRAWING

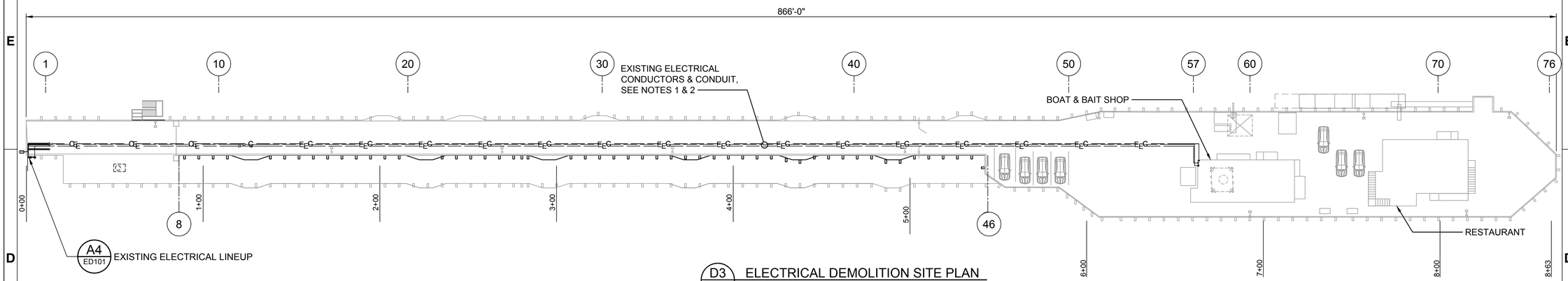

D3 ED101 ELECTRICAL DEMOLITION SITE PLAN
SCALE: 1" = 30'

A4 ED101 EXISTING ELECTRICAL LINEUP
SCALE: NOT TO SCALE

NOTES:

1. REMOVE AND TEST EXISTING POWER CONDUCTORS FROM THE ELECTRICAL EQUIPMENT AT BENT 1 TO BENT 57 FOR SHORT CIRCUITS, GROUNDS AND INSULATION RESISTANCE BETWEEN CONDUCTORS AND GROUND. IF CONDUCTORS PASS INSPECTION, STORE CONDUCTORS FOR RE-USE AND RE-INSTALLATION AFTER DEMOLITION PHASE.

2. REMOVE AND DISPOSE OF EXISTING POWER AND COMMUNICATION CONDUITS FROM LANDSIDE TO BENT 57. REMOVE AND DISPOSE OF COMMUNICATION CONDUCTORS FOUND IN COMMUNICATION CONDUIT. COORDINATE WITH AT&T FOR DISCONNECTION OF COMMUNICATION CONDUCTORS. REFER TO SINGLE LINE DIAGRAM FOR MORE INFORMATION ON CONDUIT TO BE INSTALLED/REPLACED AFTER DEMOLITION PHASE.

Mark	Description	Date	Appr

CAPITOLA WHARF RESILIENCY AND PUBLIC ACCESS IMPROVEMENT PHASE 2

ELECTRICAL DEMOLITION PLAN

Designed by: BP
Date: 5/19/2023
Rev: -
Dwn by: DT
Ckd by: DNS
M&N Project No.: 9154-01
Reviewed by: KK
Drawing code:
Submitted by: MOFFATT & NICHOL
Drawing Scale:
Plot scale: 1:1 (D SHEET)

moffatt & nichol
2185 N. CALIFORNIA BLVD.
SUITE 500
WALNUT CREEK, CA 94596

REGISTERED PROFESSIONAL ENGINEER
BRADFORD A. POLLER
No. 042735
Exp. 3-31-24
CIVIL
STATE OF CALIFORNIA

SEAL

Sheet Reference No.
ED101
INDEX: 34 OF 37

File: Q:\WC\9154-01 capitola wharf beach\4_CADD_Active_Wharf_sheet set\9154-01-ED101 ; Plotted: 5/19/2023 11:23 AM by ESTRADA, JUSTIN ; Saved: 5/19/2023 11:18 AM by DSTINER

DRAWING SCALES SHOWN BASED ON 22"x34" DRAWING

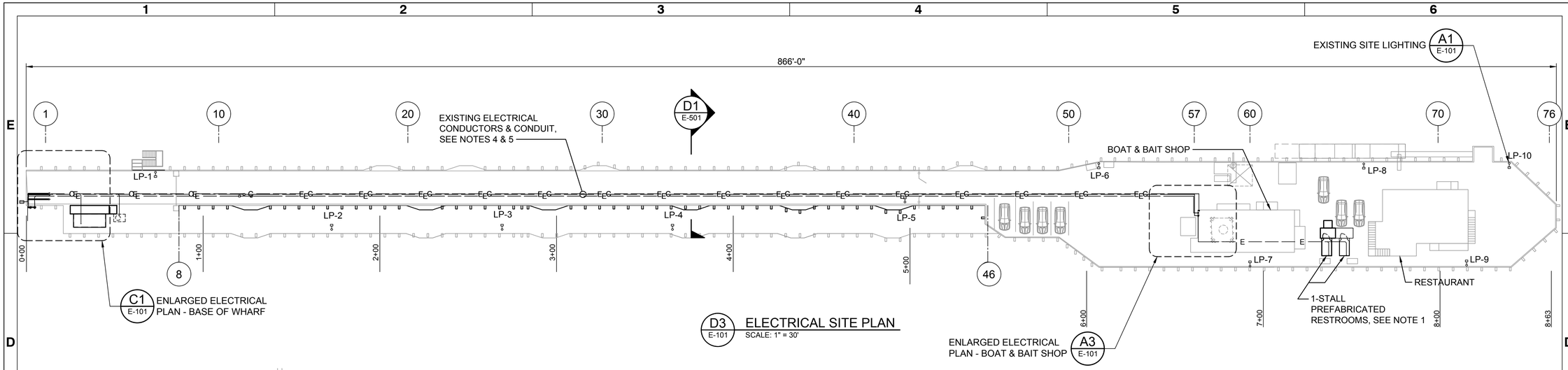

D3 E-101 ELECTRICAL SITE PLAN
SCALE: 1" = 30'

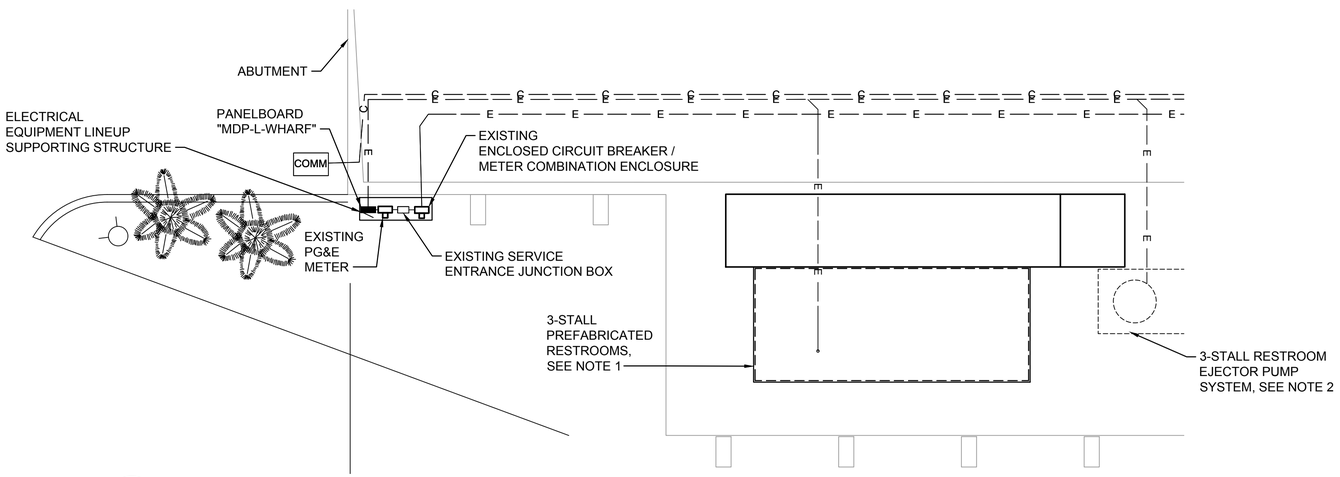

C1 E-101 ENLARGED ELECTRICAL PLAN - BASE OF WHARF
SCALE: 1" = 5'

EXISTING LIGHT POLE & LUMINAIRE, SEE NOTE 3

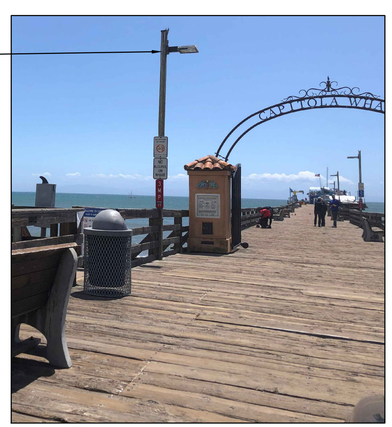

A1 E-101 EXISTING SITE LIGHTING
SCALE: NOT TO SCALE

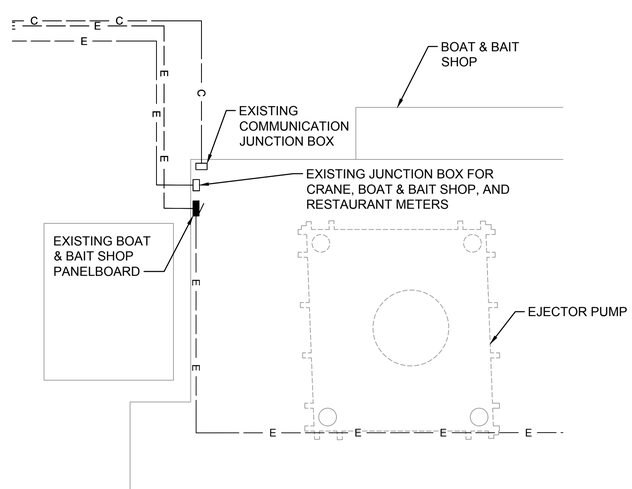

A3 E-101 ENLARGED ELECTRICAL PLAN - BOAT & BAIT SHOP
SCALE: 1" = 5'

NOTES:

1. COORDINATE WITH RESTROOM VENDOR FOR ELECTRICAL CONTROL BOX FINAL LOCATION, REFER TO VENDOR DRAWINGS FOR ADDITIONAL INFORMATION AND REQUIREMENTS.
2. PROVIDE LIBERTY PUMPS PRO680 SERIES, MODEL NO: P682XLE52W-2 OR APPROVED EQUAL. COORDINATE WITH EJECTOR PUMP SYSTEM VENDOR FOR ADDITIONAL INFORMATION AND REQUIREMENTS. COORDINATE WITH OWNER FOR FINAL LOCATION OF EJECTOR PUMP SYSTEM CONTROL PANEL.
3. FIELD VERIFY LUMINAIRE MODEL NUMBER AND ASSOCIATED POLE MATERIAL AND INSTALLATION METHODS. REPLICATE INSTALLATION AT LP-3 & LP-10 LOCATIONS. UTILIZE EXISTING ELECTRICAL CONDUCTORS AND CONDUIT FOR RE-FEEDING FOLLOWING CONDUCTOR FIELD TESTING IF APPLICABLE. REFER TO SINGLE LINE DIAGRAM FOR MORE INFORMATION.
4. RE-INSTALL TESTED POWER CONDUCTORS REMOVED AND STORED DURING DEMOLITION PHASE INTO REPLACED CONDUIT. INTERCEPT EXISTING CONDUIT AND CONDUCTORS AT BENT 57. PROVIDE ADDER ON BID IN THE EVENT CONDUCTORS NEED TO BE REPLACED. REFER TO SINGLE LINE DIAGRAM FOR REQUIRED CONDUCTOR SIZES FOR BIDDING.
5. INSTALL 2" SCH 80 PVC CONDUIT FOR COMMUNICATION CONDUCTORS. FIELD VERIFY COMMUNICATION CONDUCTOR TYPE/QUANTITY AND REPLICATE EXISTING INSTALLATION. COORDINATE WITH AT&T FOR RE-CONNECTION REQUIREMENTS.

5' 0' 5' 10'
SCALE: 1"=5'

CITY OF CAPITOLA INCORPORATED 1949

Mark	Description	Date	Appr

CAPITOLA WHARF RESILIENCY AND PUBLIC ACCESS IMPROVEMENT PHASE 2

ELECTRICAL SITE PLAN

Designed by: BP
Dwn by: DT
Cad by: DNS
Reviewed by: KK
Submitted by: MOFFATT & NICHOL
Date: 5/19/2023
Rev: -
M&N Project No.: 9154-01
Drawing code:
Drawing Scale:
Plot scale: 1:1 (D SHEET)

moffatt & nichol
2185 N. CALIFORNIA BLVD.
SUITE 500
WALNUT CREEK, CA 94596

REGISTERED PROFESSIONAL ENGINEER BRADFORD A. FORSTER No. 042735 Exp. 3-31-24 CIVIL STATE OF CALIFORNIA
SEAL

Sheet Reference No.
E-101
INDEX: 35 OF 37

File: Q:\WC\9154-01 capitola wharf beach\4_CADD_Active_Wharf_sheet set\9154-01-E-101 , Plotted: 5/19/2023 11:23 AM by: ESTRADA, JUSTIN ; Saved: 5/19/2023 11:19 AM by: JESTRADA

DRAWING SCALES SHOWN BASED ON 22"x34" DRAWING

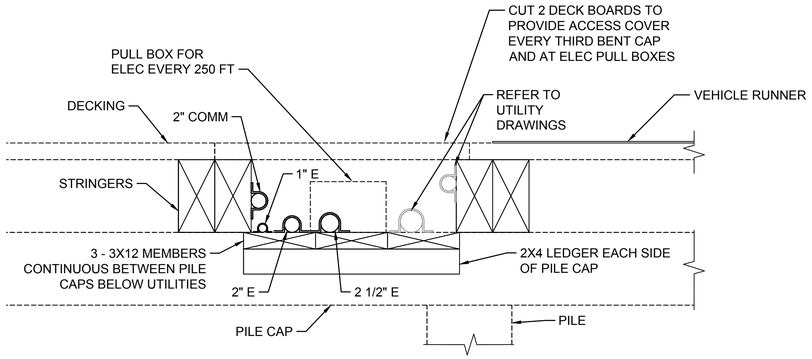

D1 / E-101 UTILITY CHASE BELOW DECK
SCALE: 1:1_1_XREF

NOTES:

1. CONDUIT SHALL BE SUPPORTED EVERY 5' MINIMUM
2. UTILIZE EXISTING 2X4 STRUCTURAL CROSS MEMBERS WHERE POSSIBLE. INSTALL ADDITIONAL CROSS MEMBERS AS REQUIRED.

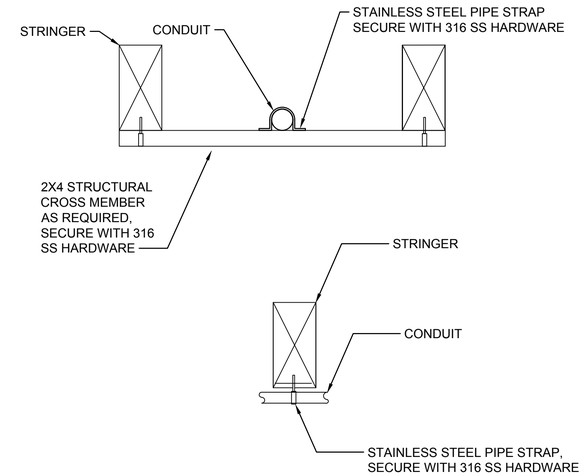

D4 / E-101 SECTION - TYPICAL CONDUIT SUPPORTS
SCALE: NOT TO SCALE

Mark	Description	Date	Appr

CAPITOLA WHARF RESILIENCY AND PUBLIC ACCESS IMPROVEMENT PHASE 2

ELECTRICAL DETAILS

moffatt & nichol
2185 N. CALIFORNIA BLVD.
SUITE 500
WALNUT CREEK, CA 94596

Designed by: BP		Date: 5/19/2023	Rev: -
Dwn by: DT	Ckd by: DNS	M&N Project No.: 9154-01	
Reviewed by: KK		Drawing code:	
Submitted by: MOFFATT & NICHOL		Drawing Scale: Plot scale: 1:1 (D SHEET)	

REGISTERED PROFESSIONAL ENGINEER
BRADFORD A. PORTER
No. 042735
Exp. 3-31-24
CIVIL
STATE OF CALIFORNIA

SEAL

Sheet Reference No.
E-501
INDEX: 36 OF 37

File: Q:\WO\9154-01 capitola wharf beach\4_CADD_Active_Wharf_sheet set\9154\01-ED101 501 ; Plotted: 5/19/2023 11:23 AM by ESTRADA, JUSTIN ; Saved: 5/19/2023 11:19 AM by ACANEPA

DRAWING SCALES SHOWN BASED ON 22"x34" DRAWING

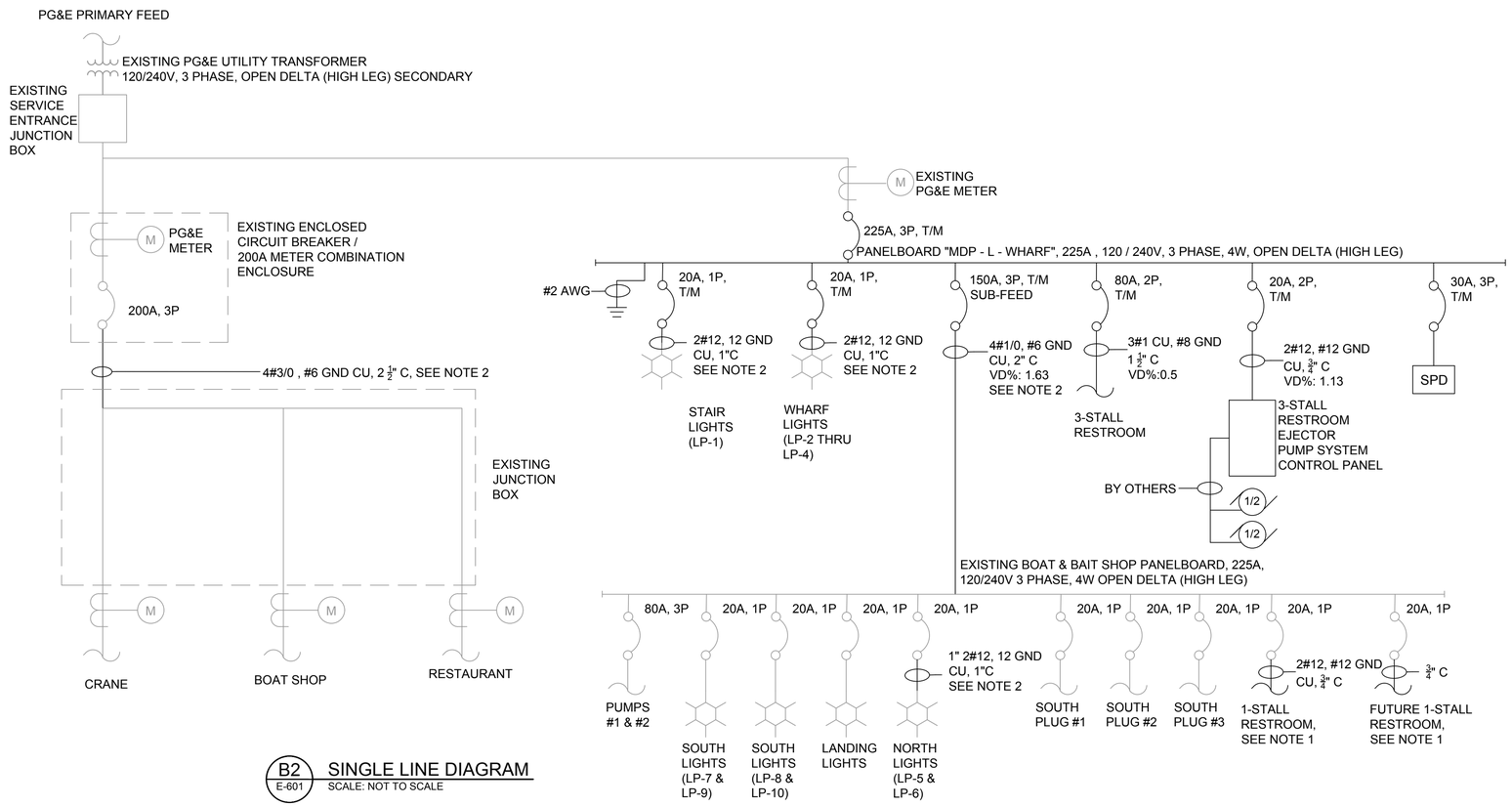

B2 / E-601 SINGLE LINE DIAGRAM
SCALE: NOT TO SCALE

GENERAL NOTES:

1. PROPERLY LABEL ALL CONDUIT, CONDUCTORS, JUNCTION BOXES AND ELECTRICAL GEAR WITH CIRCUIT IDENTIFICATION.
2. ALL CONDUCTORS ARE COPPER UNLESS OTHERWISE NOTED.
3. SPARE AND EMPTY CONDUIT TO INCLUDE PULL STRINGS, CAP, AND LABEL ON ALL CONDUIT.
4. PROVIDE ALL TERMINATION LUGS AND CONNECTION KITS.
5. GROUNDING CONDUCTOR IS MINIMUM ACCEPTABLE. WHERE SPECIFIED EQUIPMENT GROUNDING CONDUCTOR IS LARGER THAN STANDARD CABLE EQUIPMENT GROUND SIZE, AN ADDITIONAL PHASE CONDUCTOR MAY BE USED (AND IDENTIFIED) AS EQUIPMENT GROUND.
6. CABLE SIZES INDICATED ARE FOR THWN INSULATION RATING UNLESS OTHERWISE NOTED.
7. CONDUIT SIZES ARE FOR SCHEDULE 80 PVC UNLESS OTHERWISE NOTED.

REFERENCED NOTES:

1. UTILIZE SPARE 20A, 1P BREAKERS IN EXISTING BOAT & BAIT SHOP PANELBOARD FOR OVERCURRENT PROTECTION DEVICE
2. REPLACE CONDUCTORS AS NOTED IF EXISTING CONDUCTORS FAIL INSPECTION

PANELBOARD "MDP-L-WHARF"

VOLTAGE:	120/240	**BUS RATING (A):**	225	**ENCLOSURE:**	NEMA 3R TYPE 304 SS
PHASE:	3	**MAIN OC DEVICE:**	225	**MOUNTING:**	WALL-MOUNTED
WIRE:	4	**MIN INTERRUPTING RATING (KA):**	22	**LOCATION:**	BASE OF WHARF
NEUTRAL:	YES	**SERVICE ENTRANCE LABEL:**	YES		

CKT NO.	DESCRIPTION	CONNECTED LOAD (VA)				OCP			OCP		CONNECTED LOAD (VA)				DESCRIPTION	CKT NO.
		LTS	REC	MECH	MISC	AMPS	P		AMPS	P	LTS	REC	MECH	MISC		
1	LP-1	1,200				20	1	A	20	1	1,200				LP-2, LP-3, LP-4	2
3	3-STALL RESTROOM				18,240	80	2	B	30	3					SPD	4
5								C								6
7	3-STALL PUMP UNIT CONTROL PANEL			3600		20	2	A								8
9								B	20*	1					SPARE	10
11	SPARE					20*	1	C	20	1					SPARE	12
13	SPACE							A							SPACE	14
15	SPACE							B							SPACE	16
17	SPACE							C							SPACE	18
19	SPACE							A							SPACE	20
21	SPACE							B							SPACE	22
23	SPACE							C							SPACE	24
25	SPACE							A							SPACE	26
27	SPACE							B							SPACE	28
29	SPACE							C							SPACE	30
SUB-FEED																
31	EXISTING BOAT & BAIT SHOP PANELBOARD	4,200	1,800	5,100		150	3	A								32
								B								
								C								

LOAD SUMMARY

	LTS	REC	MECH	MISC	TOTAL		
CONNECTED LOAD (KVA)	6.6	1.8	8.7	18.2	35.3	240	LINE-TO-LINE VOLTS
DEMAND FACTOR	1.25	1.00	1.25	1.25	---	85	CONNECTED AMPS
DESIGN LOAD (KVA)	8.3	1.8	10.9	22.8	43.7	105	DESIGN AMPS

* INDICATES 30 mA GFCI CIRCUIT BREAKER

Mark	Description	Date	Appr

CAPITOLA WHARF RESILIENCY AND PUBLIC ACCESS IMPROVEMENT PHASE 2

SINGLE LINE DIAGRAM AND SCHEDULE

Designed by: BP
Dwn by: DT
Ckd by: DNS
Reviewed by: KK
Submitted by: MOFFATT & NICHOL
Date: 4/18/2023
Rev: -
M&N Project No.: 9154-01
Drawing code:
Drawing Scale:
Plot scale: 1:1 (0 SHEET)

moffatt & nichol
2185 N. CALIFORNIA BLVD.
SUITE 500
WALNUT CREEK, CA 94596

REGISTERED PROFESSIONAL ENGINEER
BRADFORD A. POWER
No. 042735
Exp. 3-31-24
CIVIL
STATE OF CALIFORNIA
SEAL

Sheet Reference No.
E-601
INDEX: 37 OF 37

File: Q:\WC\9154-01 capitola wharf beach\4_CADD_Active_Wharf_sheet set\9154-01-E-601 ; Plotted: 5/19/2023 11:23 AM by: ESTRADA, JUSTIN ; Saved: 5/19/2023 11:19 AM by: DTAYLOR

DRAWING SCALES SHOWN BASED ON 22"x34" DRAWING