CITY OF CAPITOLA

PUBLIC IMPROVEMENT DESIGN STANDARDS

Department of Public Works

MAY 2015

Table of Contents

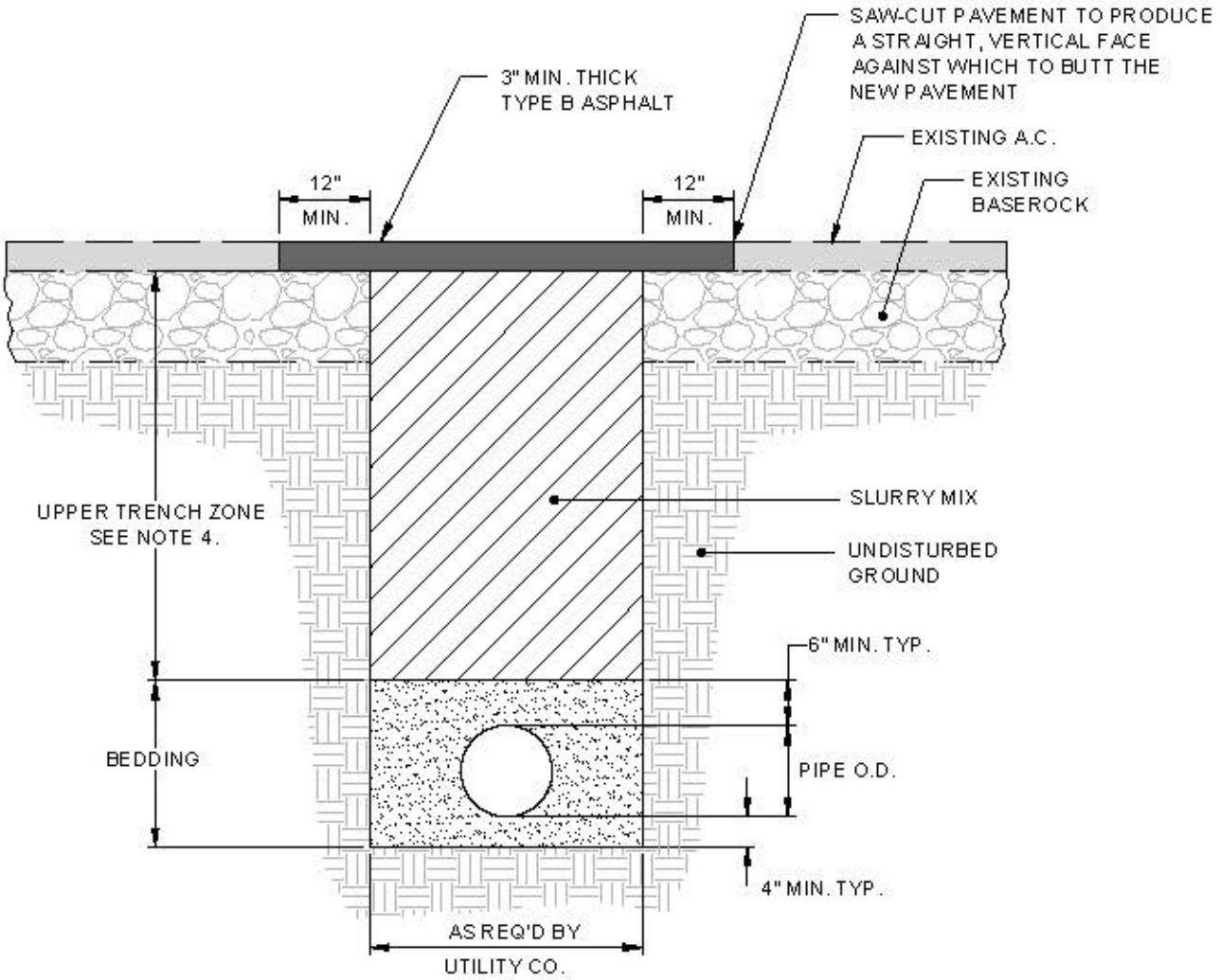

NOTES:

1. BACKFILL MIX TO PAVEMENT GRADE AND BRIDGE W/ METAL PLATE UNTIL SLURRY MIX CAN SUPPORT VEHICULAR TRAFFIC. ASPHALT CONCRETE PATCH TO MATCH EXISTING THICKNESS. 3" MINIMUM (TYPE B). DO NOT MOVE SLURRY ONCE PLACED.

2. SLURRY MIX SPECIFICATIONS: PER CUBIC YARD

   1-SACK PORTLAND CEMENT
   12 GALLONS WATER
   2600 LBS. 3/8" AGGREGATE
   800 LBS. SAND

3. REFER TO UTILITY AGENCY REQUIREMENTS

4. FOR LESS THAN 18" COVER, BACKFILL WITH 4-SACK 2500 PSI CONCRETE CAP
   FOR LESS THAN 24" COVER, BACKFILL WITH 2-SACK SLURRY
   FOR MORE THAN 48" COVER BACKFILL WITH CLASS 2 AGG. BASE

NOT TO SCALE	CITY OF CAPITOLA INCORPORATED 1949	STANDARD DRAWINGS FOR **TRENCH BACKFILL SECTION**	DRAWN: 1/15	REV:
DRAWN BY: B&W				
CHECKED BY: JFR		STEVEN JESBERG, PUBLIC WORKS DIRECTOR	DRAWING No. CAP - 001	

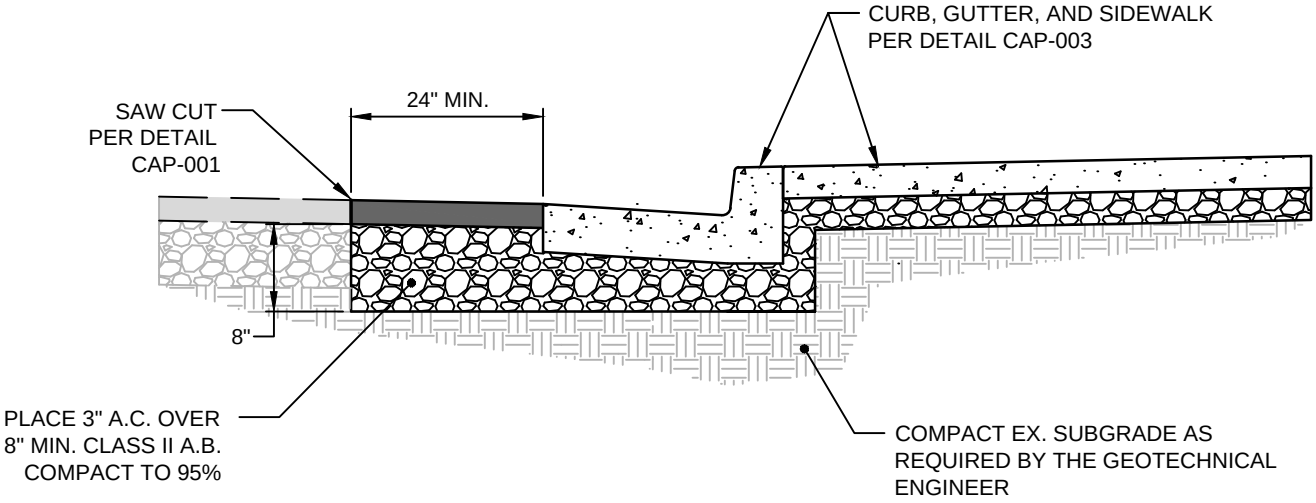

NOTES:

1. ALL WORK AND MATERIAL SHALL CONFIRM TO THE CITY OF CAPITOLA STANDARD SPECIFICATIONS FOR PUBLIC IMPROVEMENTS.

2. CONCRETE SHALL BE SIX SACK MIX, CLASS A WITH 2,500 PSI IN 28-DAY (MINIMUM).

3. FOR SCORELINE AND EXPANSION JOINTS, SEE DETAIL PAGE CAP - 006.

4. ALL CONCRETE CURBS, GUTTERS SIDEWALKS, AND DRIVEWAY APPROACH REMOVALS SHALL BE SAWCUT ON EXISTING SCORELINES. LIMITS OF REMOVAL TO BE DETMINED BY CITY.

5. ALL CONCRETE SURFACES WHICH HAVE BEEN MARKED OR DEFACED WILL NOT BE ACCEPTED.

NOT TO SCALE	CITY OF CAPITOLA INCORPORATED 1949	STANDARD DRAWINGS FOR **CONCRETE GUTTER REPLACEMENT**	DRAWN: 1/15	REV:
DRAWN BY: B&W				
CHECKED BY: JFR		STEVEN JESBERG, PUBLIC WORKS DIRECTOR	DRAWING No. CAP - 002	

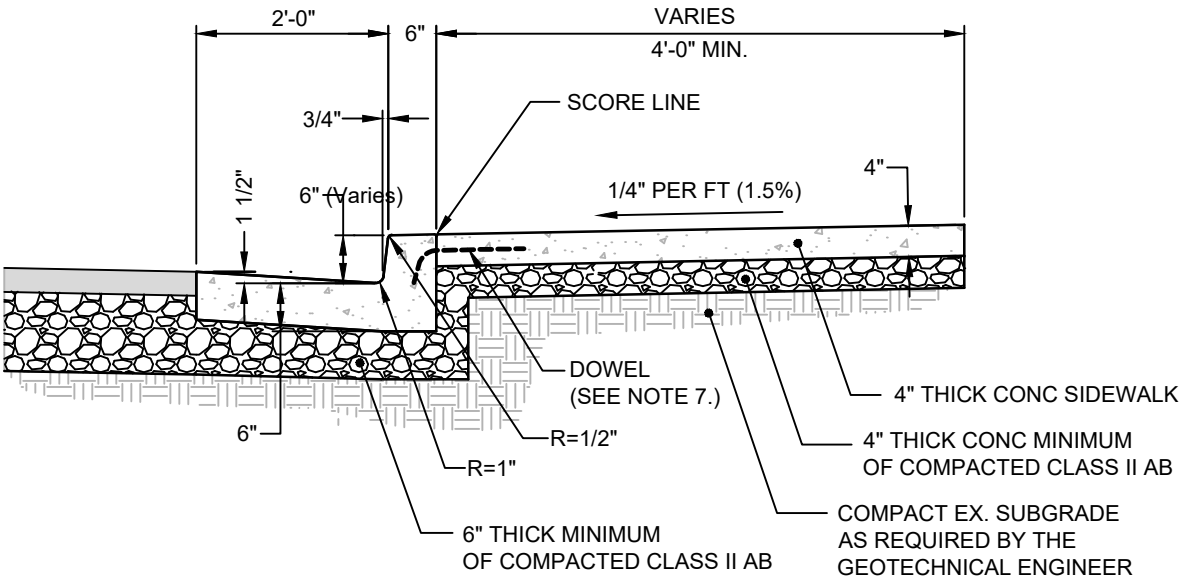

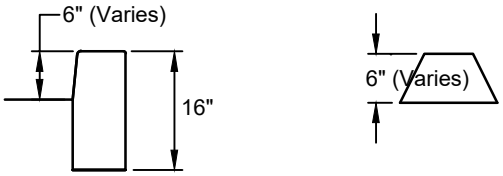

TYPE B CURB TYPE C CURB AC DIKE

NOTES:

1. ALL WORK AND MATERIAL SHALL CONFIRM TO THE CITY OF CAPITOLA STANDARD SPECIFICATIONS FOR PUBLIC IMPROVEMENTS.
2. CONCRETE SHALL BE SIX SACK MIX, CLASS A WITH 2,500 PSI IN 28-DAY (MINIMUM).
3. COMPACT SUBBASE SOIL AND CLASS II AGGREGATE BASE TO 95% RELATIVE COMPACTION.
4. SEE SCORELINE AND EXPANSION JOINTS PER CAP-006.
5. ALL CONCRETE CURBS, GUTTERS SIDEWALKS, AND DRIVEWAY APPROACH REMOVALS SHALL BE SAWCUT ON EXISTING SCORELINES. LIMITS OR REMOVAL TO BE DETERMINED BY CITY.
6. ALL CONCRETE SURFACES WHICH HAVE BEEN MARKED OR DEFACED WILL NOT BE ACCEPTED.
7. IF SIDEWALK IS NOT INSTALLED MONOLITHICALLY, PLACE #4 DOWELS 18" LONG AT 4' O.C. IN BACK OF CURB, 3" DOWN FROM TOP OF CURB AND 4" INTO THE CONCRETE.

NOT TO SCALE	CITY OF CAPITOLA INCORPORATED 1949	STANDARD DRAWINGS FOR **CURB, GUTTER, AND SIDEWALK**	DRAWN: 1/15	REV:
DRAWN BY: B&W				
CHECKED BY: JFR		STEVEN JESBERG, PUBLIC WORKS DIRECTOR	DRAWING No. CAP - 003	

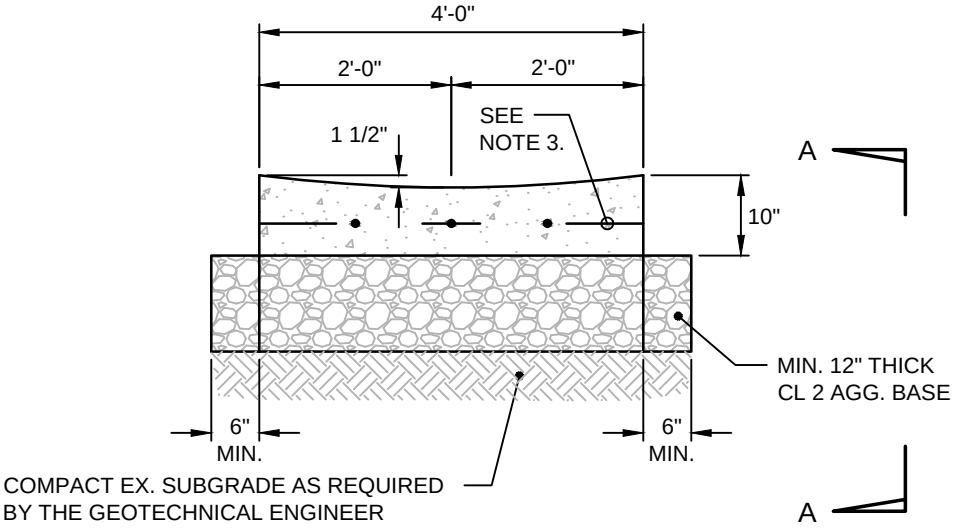

SECTION OF CROSS-GUTTER

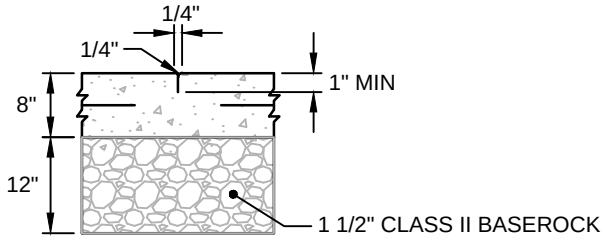

SECTION OF CROSS-GUTTER WITH TRANSVERSE
WEAKENED PLANE JOINT

SECTION A-A

NOTES:

1. WEAKENED PLANE JOINTS SHALL BE CONSTRUCTED AT 20' INTERVALS.
2. ALL CONCRETE SHALL MEET 2,500 PSI IN 28-DAY REQUIREMENTS (MINIMUM).
3. THREE #4 REBARS - GRADE 40 - CONTINUOUS WITH TIED 24" OVERLAP.
4. PAVEMENT SLOPES OF LESS THAN 2% SHALL REQUIRE A CONCRETE CALLEY GUTTER.
5. NATIVE SOIL TO BE COMPACTED TO 95%, OR AS REQUIRED BY THE GEOTECHNICAL ENGINEER

NOT TO SCALE	CITY OF CAPITOLA INCORPORATED 1949	STANDARD DRAWINGS FOR **CONCRETE VALLEY GUTTER**	DRAWN: 1/15	REV:
DRAWN BY: B&W				
CHECKED BY: JFR		STEVEN JESBERG, PUBLIC WORKS DIRECTOR	DRAWING No. CAP - 004	

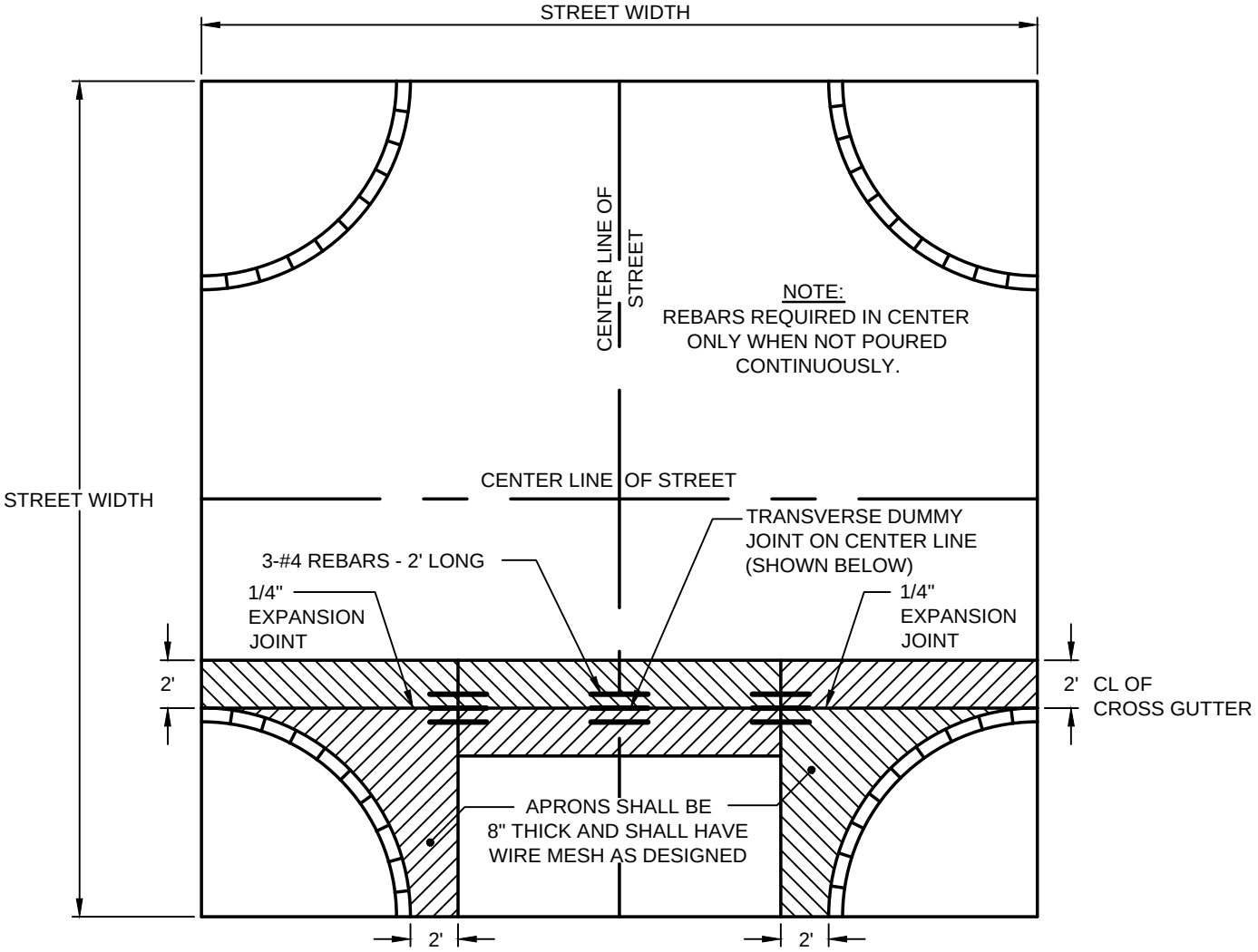

NOTES:

1. WIRE MESH SHALL BE 6"x6" SQUARES No.10 x No.10 ELECTRICALLY WELDED WIRE AND SHALL MEET THE REQUIREMENTS OF A.S.T.M. DESIGNATION A185-53-T.

2. IF DIRECTIONAL FLOW OF CROSS GUTTER IS OPPOSITE TO THAT SHOWN, THE DETAIL OF FLOW AT EACH CURB WILL BE THAT OF THE OPPOSITE RETURN ON THE LINE OF THE CROSS GUTTER.

3. CONCRETE SHALL MEET 2,500 PSI IN 28-DAY REQUIREMENTS (MINIMUM).

4. 4. NATIVE SOIL TO BE COMPACTED TO 95%, OR AS REQUIRED BY THE GEOTECHNICAL ENGINEER.

5. SEE DWG NO. CAP-004 FOR TYPICAL SECTION.

NOT TO SCALE	CITY OF CAPITOLA INCORPORATED 1949	STANDARD DRAWINGS FOR **4' STANDARD CROSS GUTTER**	DRAWN: 1/15	REV:
DRAWN BY: B&W				
CHECKED BY: JFR		STEVEN JESBERG, PUBLIC WORKS DIRECTOR	DRAWING No. CAP - 005	

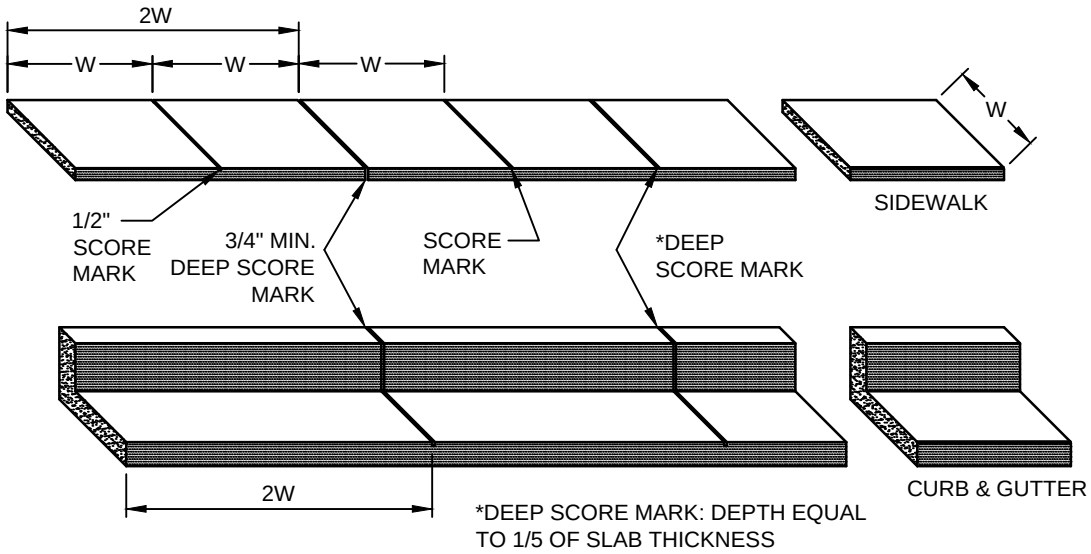

NOTES:

1. USE 1/4" RADIUS JOINTER FOR ALL SCORELINES. LINES SHALL BE STRAIGHT, TRUE TO ALIGNMENT AND DEPTH.

2. 3/4" DEEP SCORE RUNS CONTINUOUSLY THROUGH SIDEWALK AND CURB AND GUTTER.

NOT TO SCALE	CITY OF CAPITOLA INCORPORATED 1949	STANDARD DRAWINGS FOR **EXPANSION JOINTS & SCORE MARKS**	DRAWN: 1/15	REV:
DRAWN BY: B&W				
CHECKED BY: JFR		STEVEN JESBERG, PUBLIC WORKS DIRECTOR	DRAWING No. CAP - 006	

ENTRANCE DRIVEWAY DETAIL

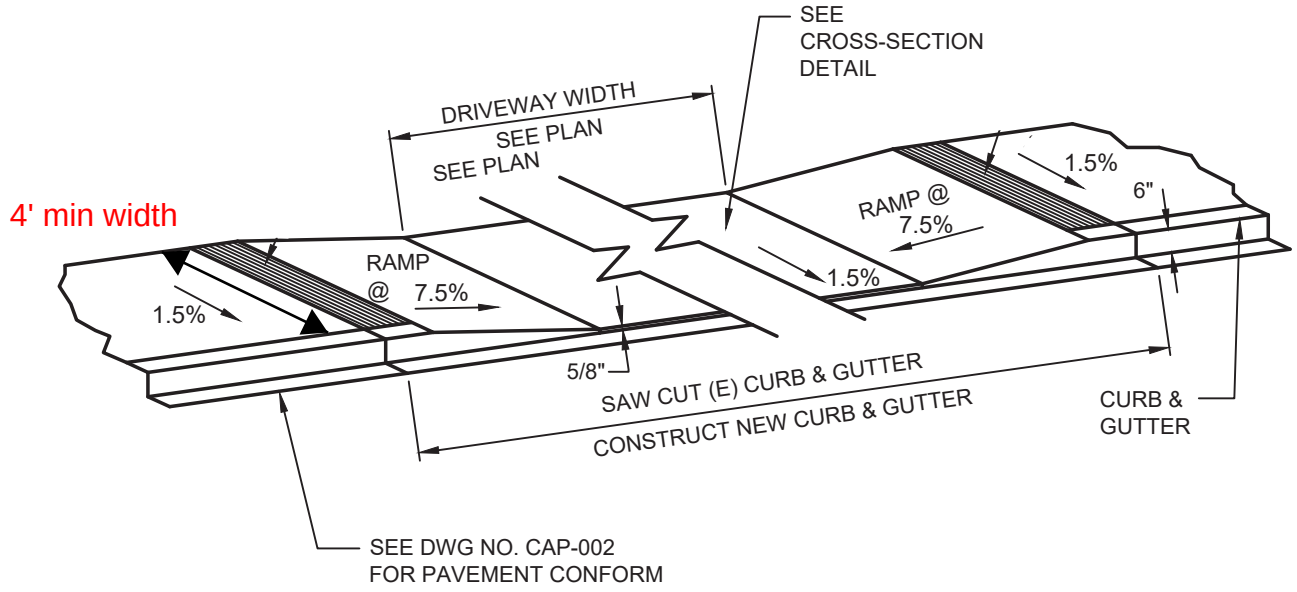

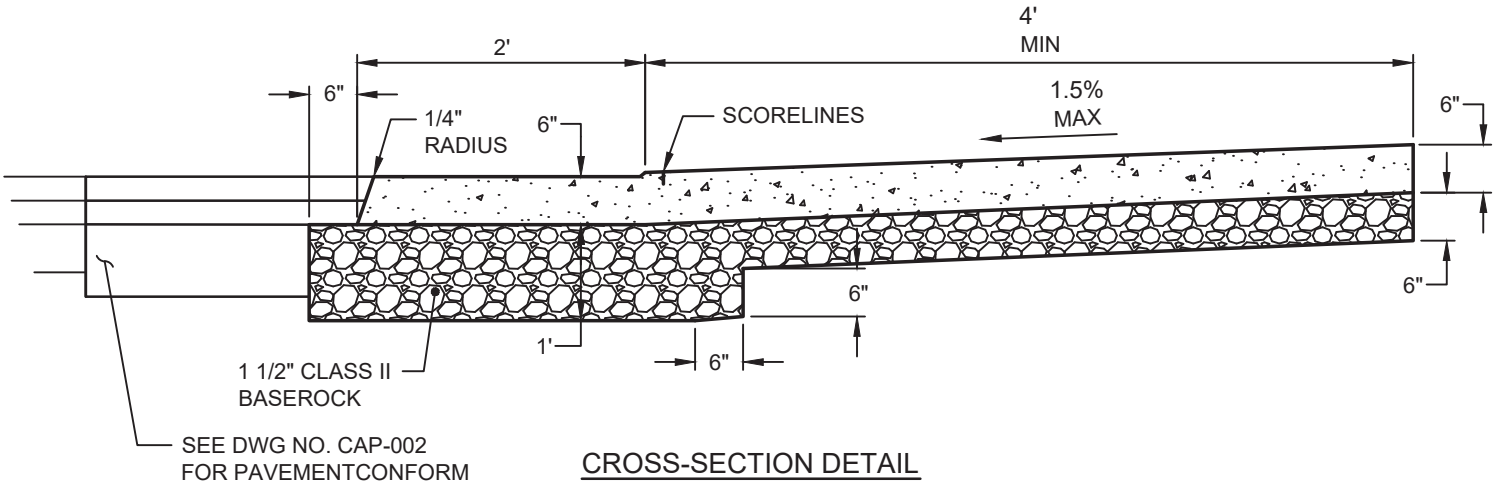

CROSS-SECTION DETAIL

NOTES:

1. SEE NOTES FOR STANDARD DRIVEWAY APPROACH ON DWG NO. CAP-008.

NOT TO SCALE	CITY OF CAPITOLA INCORPORATED 1949	STANDARD DRAWINGS FOR **DEPRESSED DRIVEWAY APPROACH**	DRAWN: 1/15	REV:
DRAWN BY: B&W				
CHECKED BY: JFR		STEVEN JESBERG, PUBLIC WORKS DIRECTOR	DRAWING No. CAP - 007	

PLAN:

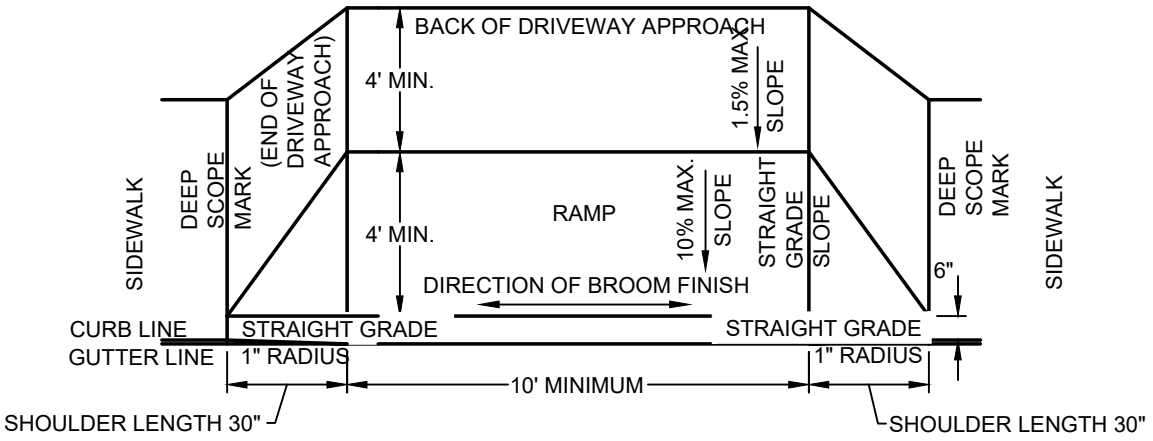

ELEVATION:

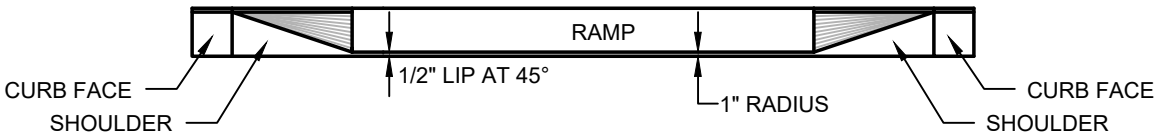

SECTION OF DRIVEWAY APPROACH:

USE WHEN APPROACH AND GUTTER ARE POURED TOGETHER

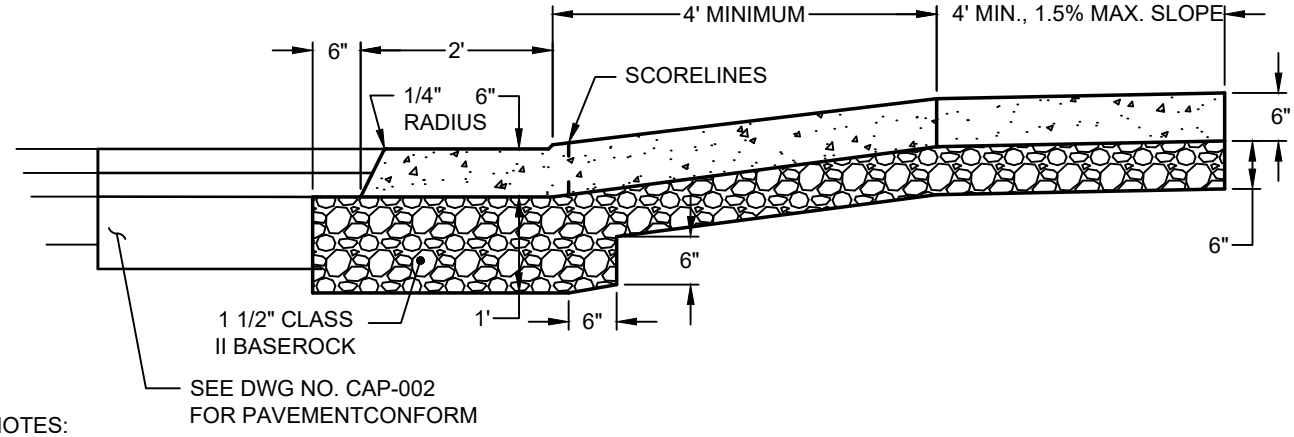

NOTES:

1. ALL WORK AND MATERIAL SHALL BE IN ACCORDANCE WITH THE CITY OF CAPITOLA STANDARD SPECIFICATIONS FOR PUBLIC IMPROVEMENTS.
2. CONCRETE SHALL MEET 2,500 PSI IN 28-DAY REQUIREMENS (MINIMUM).
3. DRIVEWAY APPROACH SHALL BE GIVEN A MEDIUM BROOM FINISH FROM END TO END.
4. SCORELINES SHALL CORRESPOND WITH THE SCORELINS OF THE ADJACENT SIDEWALK WHEN PRACTICAL.
5. ALL DRIVEWAY APPROACH REMOVALS SHALL BE SAW CUT ON EXISTING SCORELINES. LIMITS OF REMOVAL TO BE DETERMINED BY CITY.
6. ALL CONCRETE SURFACES WHICH HAVE BEEN MARKED OR DEFACED WILL NOT BE ACCEPTED.
7. USE 1/4" RADIUS JOINTER FOR ALL SCORELINES WHICH SHALL BE STRAIGHT, TRUE TO ALIGNMENT AND DEPTH.
8. 5' MINIMUM BETWEEN DRIVEWAY APPROACHES.
9. 6 X 6 X #10 WIRE MESH WILL BE INSTALLED FULL LENGTH FROM BACK OF GUTTER TO BACK OF SIDEWALKS ON ALL DRIVEWAYS.
10. DIFFERENCE IN SLOPE OF THE DRIVEWAY RAMP AND THE SLOPE OF A LINE BETWEEN THE GUTTER AND A POINT ON THE ROADWAY 5'-0" FROM GUTTER LINE SHALL NOT EXCEED 15%. REDUCE DRIVEWAY RAMP SLOPE, NOT GUTTER SLOPE, WHERE REQUIRED.

NOT TO SCALE	CITY OF CAPITOLA INCORPORATED 1949	STANDARD DRAWINGS FOR **STANDARD DRIVEWAY APPROACH**	DRAWN: 1/15	REV:
DRAWN BY: B&W				
CHECKED BY: JFR		STEVEN JESBERG, PUBLIC WORKS DIRECTOR	DRAWING No. CAP - 008	

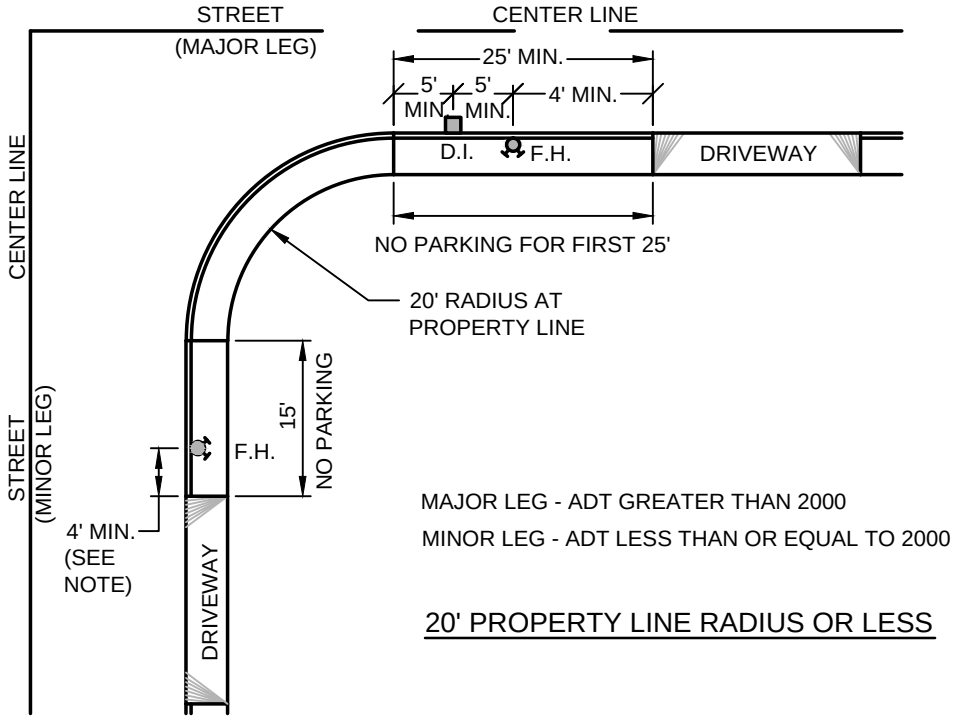

20' PROPERTY LINE RADIUS OR LESS

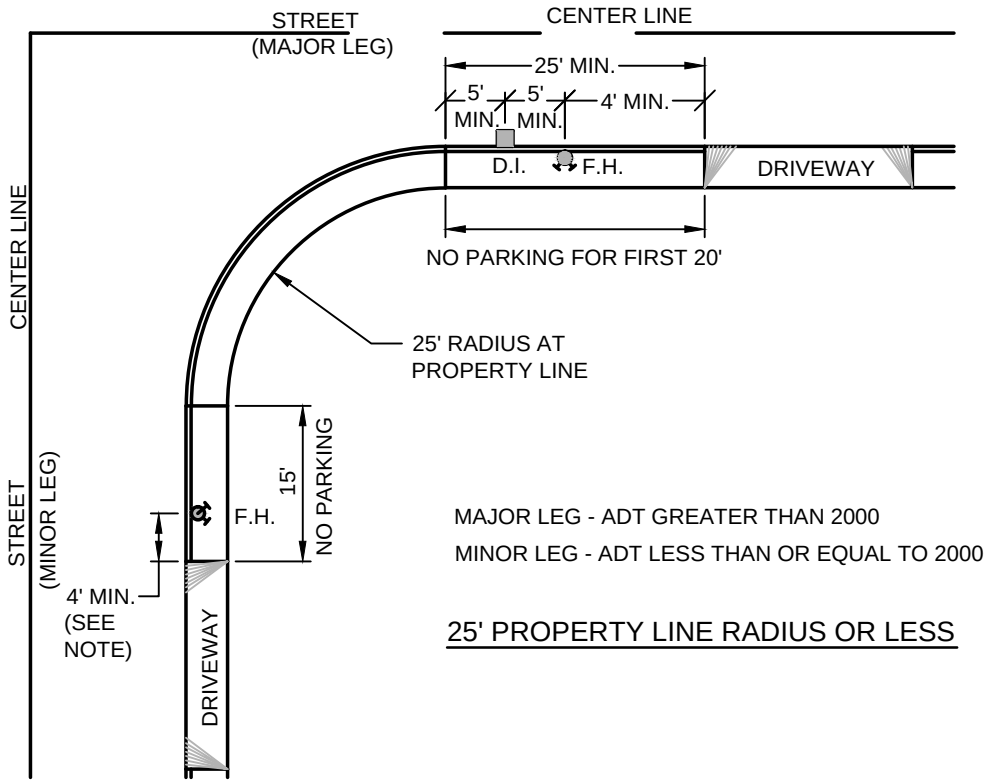

25' PROPERTY LINE RADIUS OR LESS

NOTES:

1. DRIVEWAY APPROACHES SHALL NOT BE CONSTRUCTED WITHIN 4' OF STREET LIGHTS OR FIRE HYDRANTS.

NOT TO SCALE	CITY OF CAPITOLA INCORPORATED 1949	STANDARD DRAWINGS FOR **DRIVEWAY LOCATION AT CORNERS**	DRAWN: 1/15	REV:
DRAWN BY: B&W				
CHECKED BY: JFR		STEVEN JESBERG, PUBLIC WORKS DIRECTOR	DRAWING No. CAP - 009	

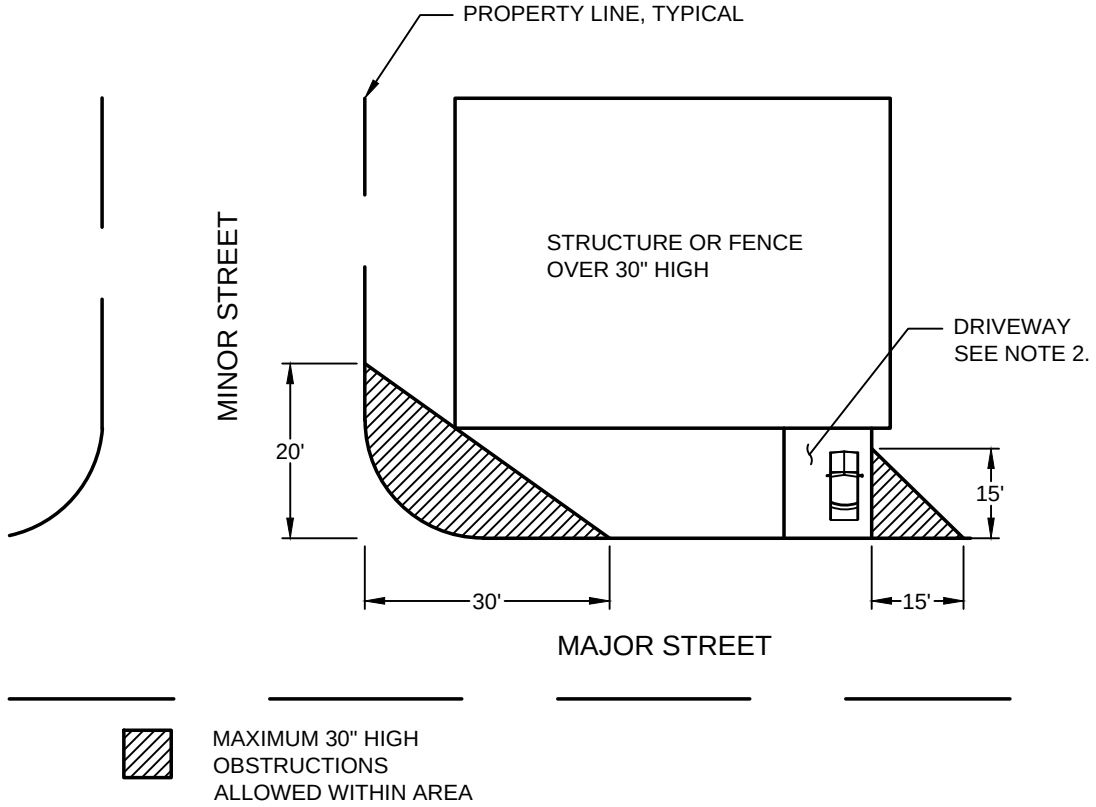

NOTES:

1. MAJOR STREET ADT > 2000; MINOR STREET ADT < 2000.
2. DRIVEWAY SHALL BE LOCATED AS FAR AS PRACTICAL FROM INTERSECTION.
3. SITE DISTANCE TRIANGLE TYPICAL EACH SIDE OF DRIVEWAY.
4. ALTERNATIVE ANALYSIS ALLOWED PER TOPIC 405 CALTRANS HIGHWAY DESIGN MANUAL 4TH EDITION.

NOT TO SCALE	CITY OF CAPITOLA INCORPORATED 1949	STANDARD DRAWINGS FOR **INTERSECTION SITE DISTANCE**	DRAWN: 1/15	REV:
DRAWN BY: B&W				
CHECKED BY: JFR		STEVEN JESBERG, PUBLIC WORKS DIRECTOR	DRAWING No. CAP - 010	

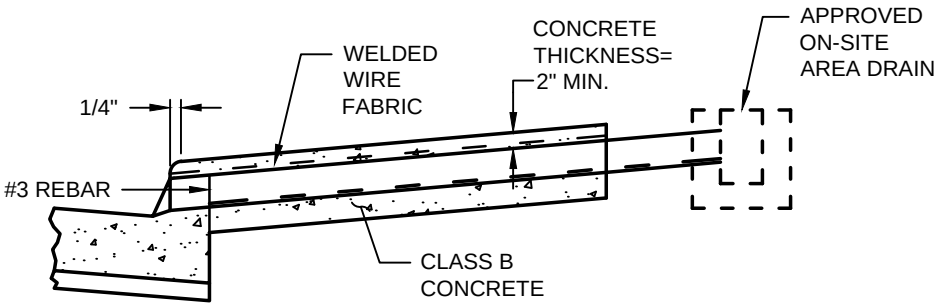

TYP. 2" PVC DRAIN PIPE

THE CONCRETE AND COVER FOR PVC DRAINS SHALL EXTEND CONTINUOUSLY FROM PROPERTY LINE TO THE FACE OF CURB.

NOTES:

1. FOR GREATER CAPACITY, ADDITIONAL DRAINS MAY BE INSTALLED WITH THE FOLLOWING LIMITATIONS:

   A. ADJACENT DRAINS SHALL BE OF ONE TYPE.
   B. MINIMUM DISTANCE BETWEEN DRAINS SHALL BE 4".

2. PVC PIPE FORM SHALL BE SUPPORTED FROM DISTORTION DURING POUR OF CONCRETE BY FILLING WITH SAND. TEMPORARY SUPPORT WEDGED IN PLACE OR OTHER SUITABLE MEANS.

NOT TO SCALE	CITY OF CAPITOLA INCORPORATED 1949	STANDARD DRAWINGS FOR **CURB DRAIN ELEVATION**	DRAWN: 1/15	REV:
DRAWN BY: B&W				
CHECKED BY: JFR		STEVEN JESBERG, PUBLIC WORKS DIRECTOR	DRAWING No. CAP - 011	

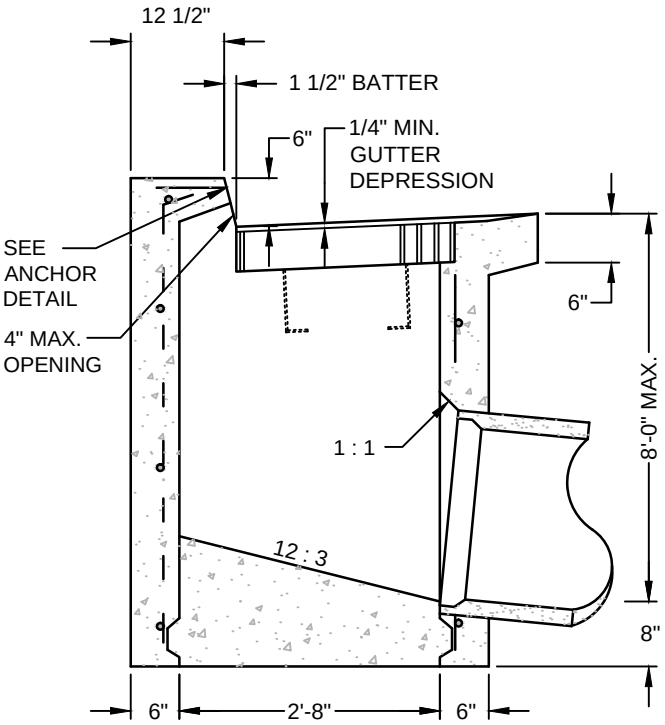

SECTION A-A

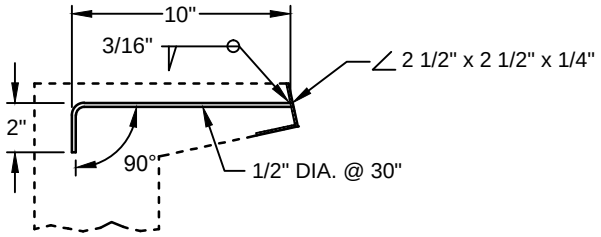

FACE ANGLE ANCHOR DETAIL

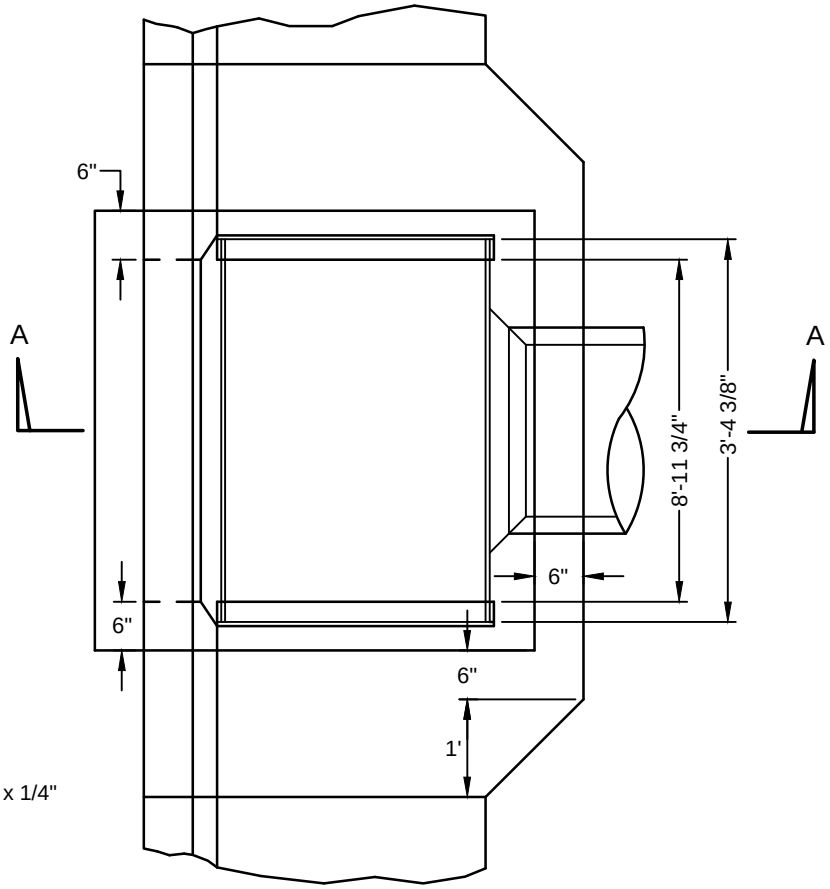

PLAN

NOTES:

1. REINFORCING STEEL IN WALLS SHALL BE #4 BARS @ 18" ± CENTERS PLACED 1 1/2" CLEAR TO INSIDE OF BOX.

2. SEE DWG NO. CAP-003 FOR FRAME & GRATE DETAILS.

NOT TO SCALE	CITY OF CAPITOLA INCORPORATED 1949	STANDARD DRAWINGS FOR **DROP INLET, TYPE GO**	DRAWN: 1/15	REV:
DRAWN BY: B&W				
CHECKED BY: JFR		STEVEN JESBERG, PUBLIC WORKS DIRECTOR	DRAWING No. CAP - 012	

NOTES:

1. BEARING BARS TO BE 3 1/2" x 1/4" BARS ON 1 7/8" CENTERS.
2. 3/8" CROSS BARS MAY BE FILLET WELDED OR ELECTROFORGED TO BEARING BARS.
3. WEIGHT OF 24" GRATE = 141 LBS. (TYPE 24 GRATE SHOWN)
4. WEIGHT OF 18" GRATE = 107 LBS.
5. FRAME AND GRATE TO BE GALVANIZED AFTER FABRICATION.

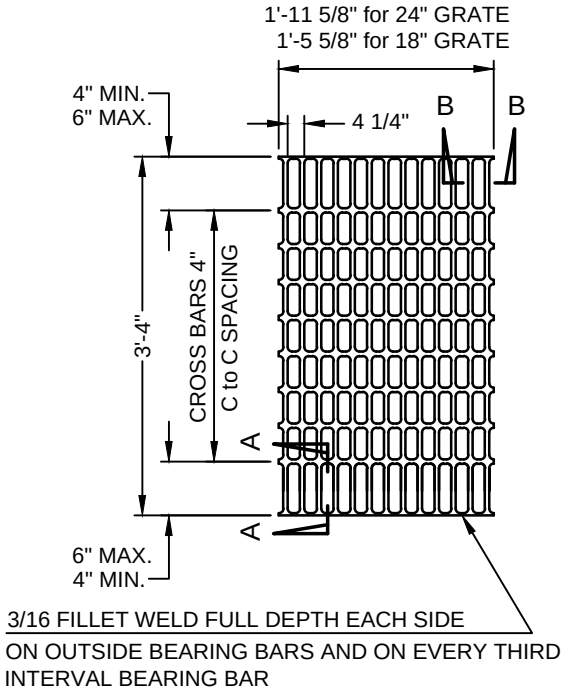

TYPE 18-10 & 24-13 GRATE

(WELDED STEEL)

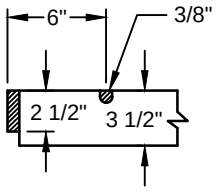

SECTION A-A

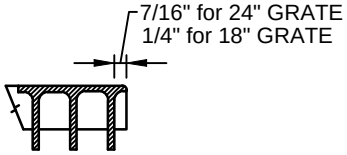

SECTION B-B

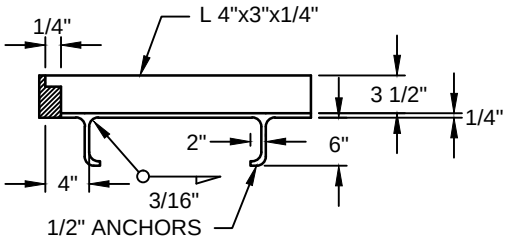

CROSS SECTION

(THRU FRAME)

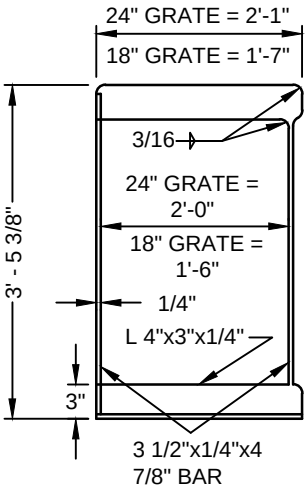

TYPICAL FRAME

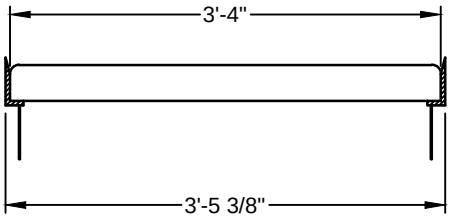

LONGITUDINAL SECTION

(THRU FRAME AND GRATE)

NOT TO SCALE	CITY OF CAPITOLA INCORPORATED 1949	STANDARD DRAWINGS FOR **FRAME AND GRATE FOR DROP INLET, TYPE GO**	DRAWN: 1/15	REV:
DRAWN BY: B&W				
CHECKED BY: JFR		STEVEN JESBERG, PUBLIC WORKS DIRECTOR	DRAWING No. CAP - 013	

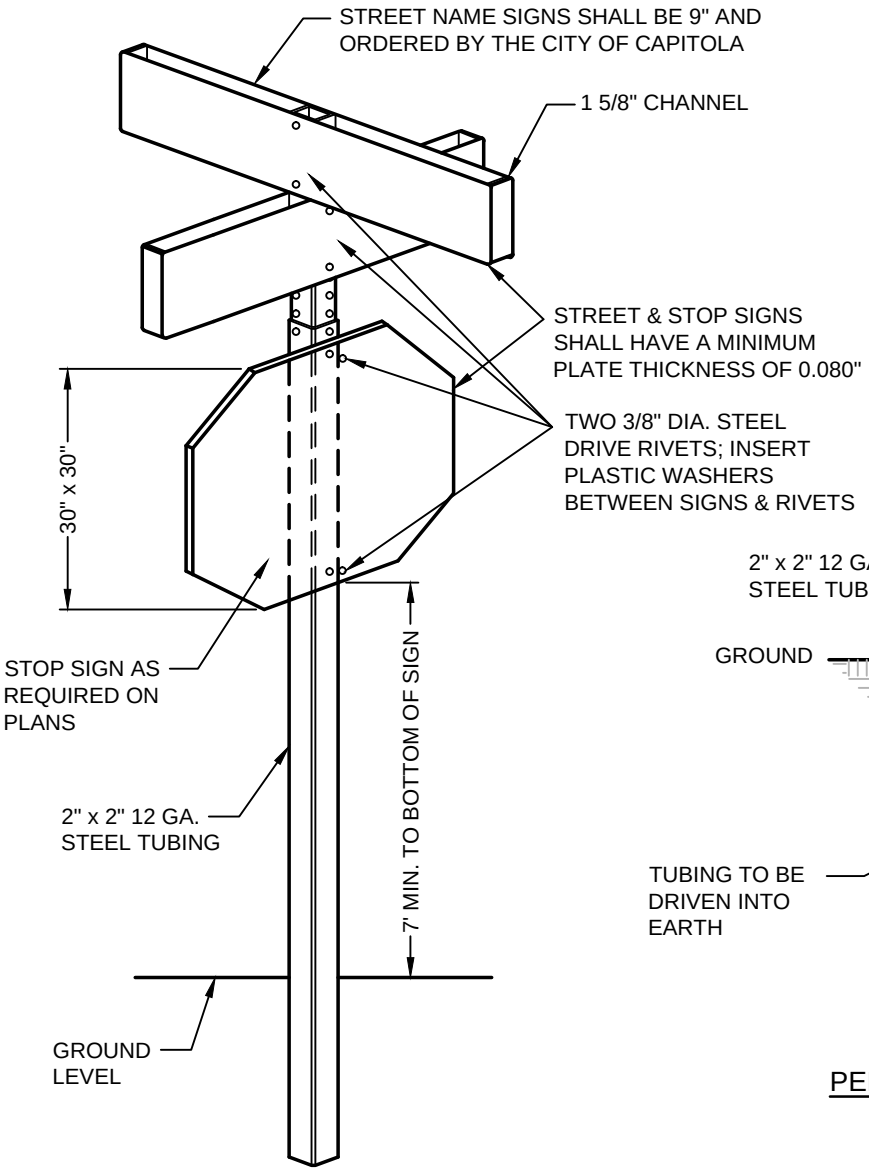

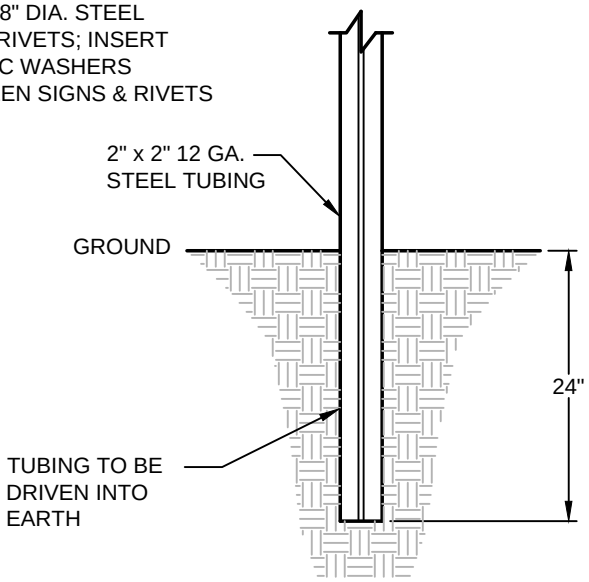

PENETRATOR UNIT DETAIL

NOTES:

1. THE LOCATION OF STREET SIGNS SHALL BE AS SHOWN ON THE PLANS OR AS DIRECTED BY THE ENGINEER.

2. ALL STREET SIGNS SHALL BE HIGH INTENSITY, PRISMATIC REFLECTIVE SHEETING WITH 1160A ANTI-GRAFFITI OVERLAY.

NOT TO SCALE	CITY OF CAPITOLA INCORPORATED 1949	STANDARD DRAWINGS FOR **STREET SIGN EMBEDDED IN EARTH**	DRAWN: 1/15	REV:
DRAWN BY: B&W				
CHECKED BY: JFR		STEVEN JESBERG, PUBLIC WORKS DIRECTOR	DRAWING No. CAP - 014	

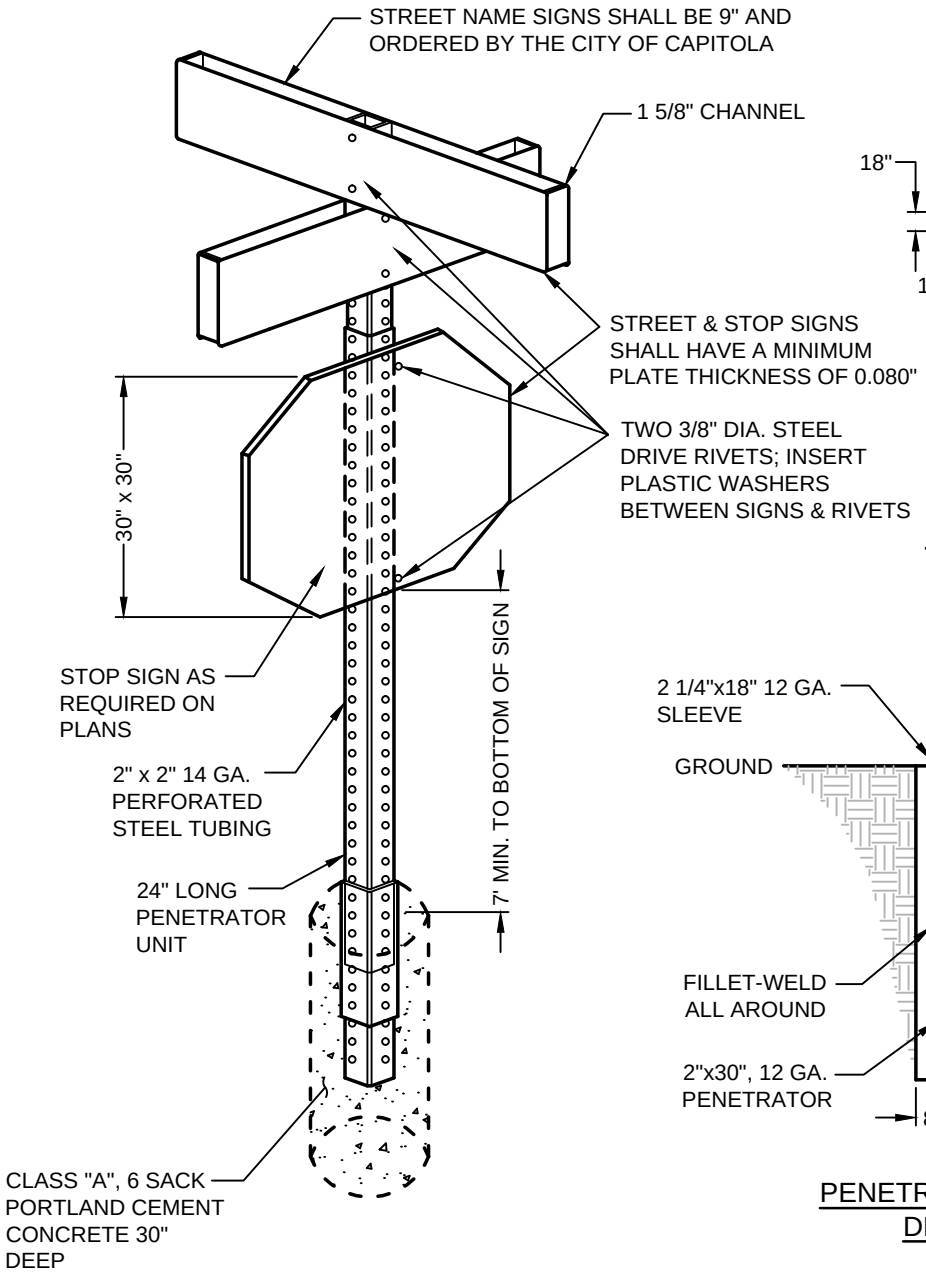

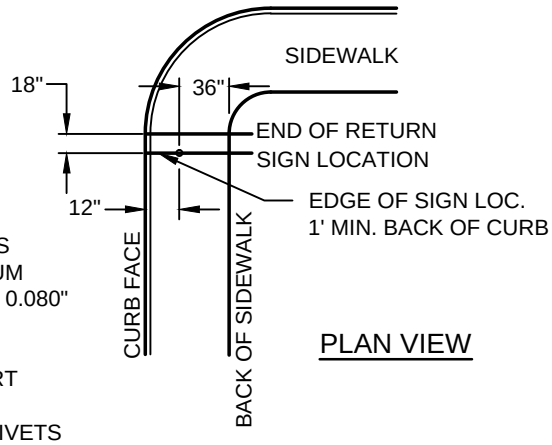

PLAN VIEW

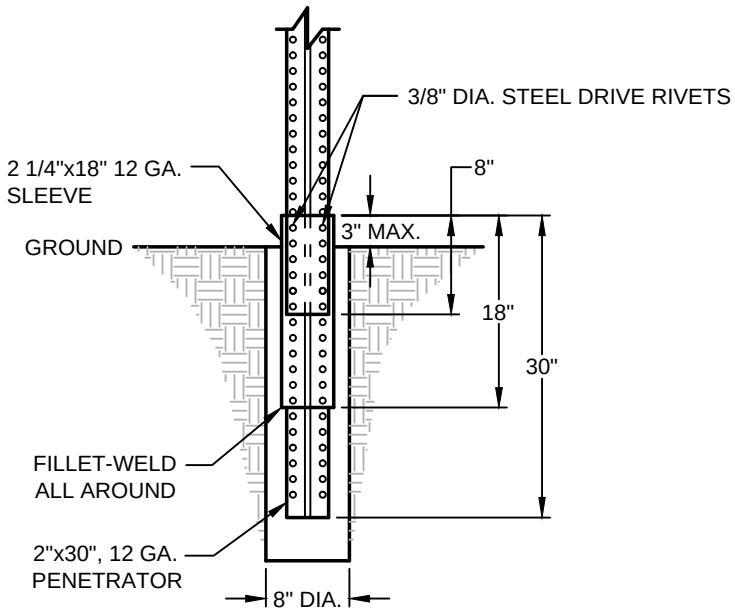

PENETRATOR UNIT DETAIL

NOTES:

1. THE LOCATION OF STREET SIGNS SHALL BE AS SHOWN ON THE PLANS OR AS DIRECTED BY THE ENGINEER.

2. ALL STREET SIGNS SHALL BE HIGH INTENSITY, PRISMATIC REFLECTIVE SHEETING WITH 1160A ANTI-GRAFFITI OVERLAY.

NOT TO SCALE	CITY OF CAPITOLA INCORPORATED 1949	STANDARD DRAWINGS FOR **STREET SIGN EMBEDDED ON SIDEWALK**	DRAWN: 1/15	REV:
DRAWN BY: B&W				
CHECKED BY: JFR		STEVEN JESBERG, PUBLIC WORKS DIRECTOR	DRAWING No. CAP - 015	

SIGN R99 (CA)

SIGN R99C
(CA)
SEE NOTE 3

PLAQUE R99B (CA)
SIGN R99 (CA) WITH PLAQUE R99B
(CA)
SEE NOTE 3

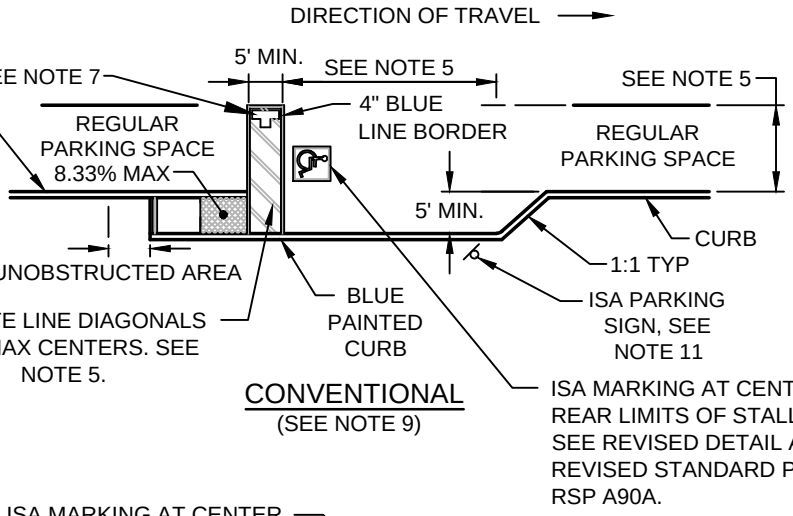

CONVENTIONAL
(SEE NOTE 9)

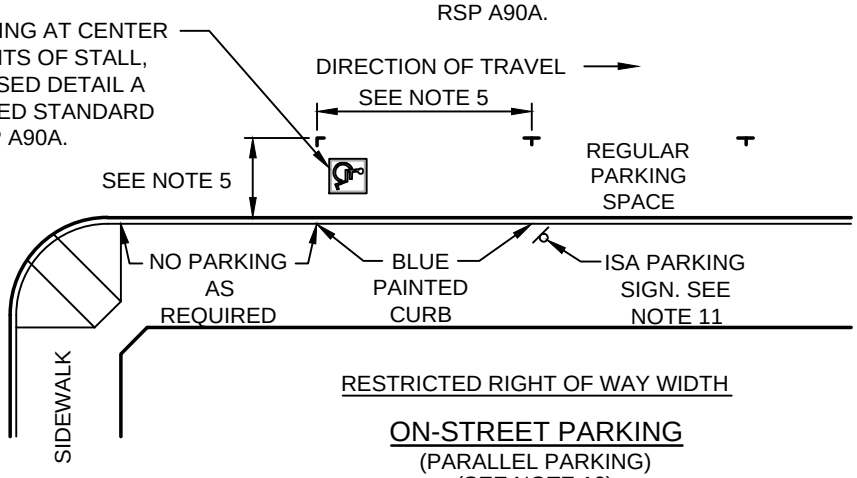

RESTRICTED RIGHT OF WAY WIDTH

ON-STREET PARKING
(PARALLEL PARKING)
(SEE NOTE 10)

PAVEMENT MARKING
SEE NOTE 7

NOTES:

1. PARKING SPACES SHALL BE SO LOCATED THAT PERSONS WITH DISABILITIES ARE NOT COMPELLED TO WHEEL OR WALK BEHIND PARKED CARS OTHER THAN THEIR OWN.

2. SURFACE SLOPES OF ACCESSIBLE ON-STREET PARKING SPACES SHALL BE THE MINIMUM FEASIBLE.

3. WHERE PLAQUE R99B (CA) OR SIGN R99C (CA) ARE INSTALLED, THE BOTTOM OF THE SIGN OR PLAQUE PANEL SHALL BE A MINIMUM OF 7'-0" ABOVE THE SURROUNDING SURFACE.

4. CURB RAMPS SHALL CONFORM TO THE DETAILS SHOWN ON REVISED STANDARD PLAN RSP A88A.

5. ACCESSIBLE ON-STREET PARKING SPACES SHALL NOT BE SMALLER IN LENGTH OR WIDTH THAN THAT SPECIFIED BY THE LOCAL JURISDICTION FOR OTHER PARKING SPACES, BUT NOT LESS THAN 20'-0" IN LENGTH AND NOT LESS THAN 8'-0" IN WIDTH.

6. BLUE PAINT, INSTEAD OF WHITE MAY BE USED FOR MARKING ACCESSIBILITY AISLES IN AREAS WHERE SNOW MAY CAUSE WHITE MARKINGS TO NOT BE VISIBLE.

7. THE WORDS "NO PARKING", SHALL BE PAINTED IN WHITE LETTERS NO LESS THAN 1'-0" HIGH ON A CONTRASTING BACKGROUND AND LOCATED SO THAT IT IS VISIBLE TO TRAFFIC ENFORCEMENT OFFICIALS. SEE STANDARD PLAN A24E FOR SQUARE FOOT AREA FOR PAINTING THE WORDS "NO PARKING".

8. THERE SHALL BE NO OBSTRUCTIONS ON THE SIDEWALK ADJACENT TO AND FOR THE FULL LENGTH OF THE PARKING SPACE, EXCEPT FOR THE ISA PARKING SIGN SHOWN.

9. THE CONVENTIONAL DETAIL SHOULD BE THE PRIMARY CHOICE OF ACCESSIBLE ON-STREET PARKING. HOWEVER, IF THE SIDEWALK LACKS ADEQUATE SPACE TO CONSTRUCT A STANDARD CURB RAMP, THE RESTRICTED RIGHT OF WAY DETAIL SHOULD BE USED.

10. IF THE RESTRICTED RIGHT OF WAY WIDTH DETAIL IS SELECTED AND IT CONFLICTS WITH A BUS STOP OR OTHER USES, THIS DETAIL MAY APPLY TO THE OTHER END OF THE BLOCK.

11. ACCESSIBLE PARKING ONLY SIGN SHALL BE SIGN R99C (CA) OR SIGN R99 (CA) WITH PLAQUE R99B (CA).

ISA = INTERNATIONAL SYMBOL OF ACCESSIBILITY

NOT TO SCALE	CITY OF CAPITOLA INCORPORATED 1949	STANDARD DRAWINGS FOR **HANDICAP PARKING (ON-STREET)**	DRAWN: 1/15	REV:
DRAWN BY: B&W				
CHECKED BY: JFR		STEVEN JESBERG, PUBLIC WORKS DIRECTOR	DRAWING No. CAP - 016	

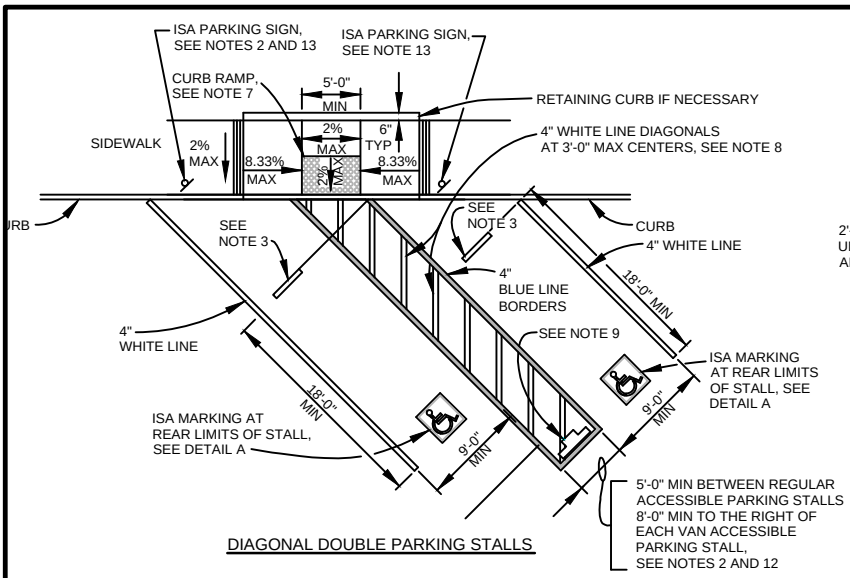

DIAGONAL DOUBLE PARKING STALLS

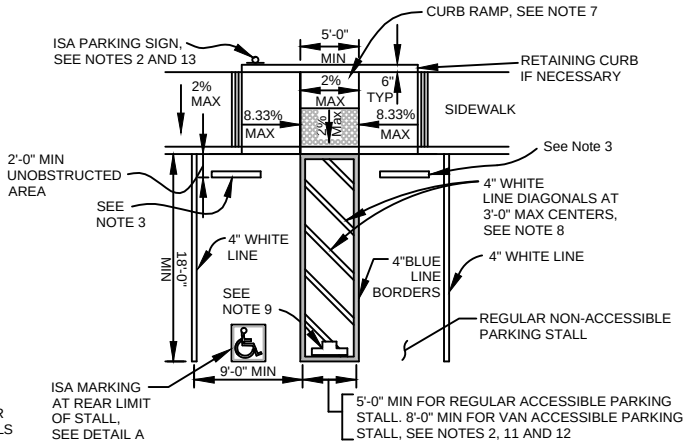

SINGLE PARKING STALL

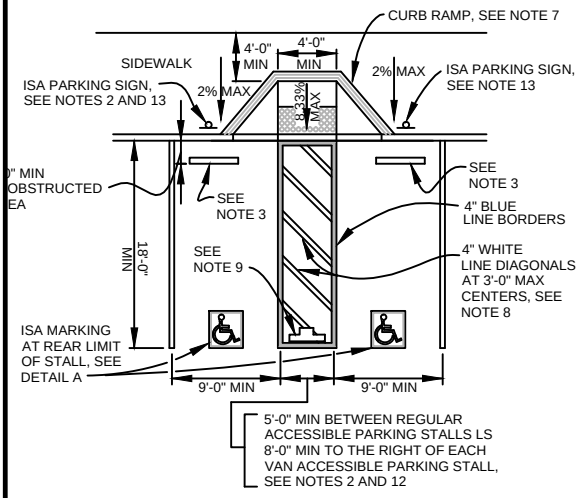

DOUBLE PARKING STALL

SIGN R99 (CA)

SIGN R99C (CA)
SEE NOTE 6

SIGN R100B (CA)
SEE NOTE 10

SIGN R7-8B
SEE NOTES 2 AND 6

PLAQUE R99B (CA)
SIGN R99 (CA) WITH PLAQUE R99B (CA)
SEE NOTE 6

OFF-STREET PARKING SIGNS
(PARKING LOT OR GARAGE)
SEE NOTE 6

NOTES:

1. ACCESSIBLE PARKING SPACES SERVING A PARTICULAR BUILDING SHALL BE LOCATED ON THE SHORTEST ACCESSIBLE ROUTE OF TRAVEL FROM ADJACENT PARKING TO AN ACCESSIBLE ENTRANCE. IN PARKING FACILITIES THAT DO NOT SERVE A PARTICULAR BUILDING, ACCESSIBLE PARKING SHALL BE LOCATED ON THE SHORTEST ACCESSIBLE ROUTE OF TRAVEL TO AN ACCESSIBLE PEDESTRIAN ENTRANCE OF THE PARKING FACILITY.
2. ONE IN EVERY EIGHT ACCESSIBLE OFF-STREET PARKING STALLS, BUT NOT LESS THAN ONE, SHALL BE SERVED BY AN ACCESSIBLE AISLE OF 8'-0" MINIMUM WIDTH AND SHALL BE SIGNED VAN ACCESSIBLE. THE R7-8B SIGN SHALL BE MOUNTED BELOW THE R99B (CA) PLAQUE OR THE R99C (CA) SIGN.
3. IN EACH PARKING STALL, A CURB OR BUMPER SHALL BE PROVIDED AND LOCATED TO PREVENT ENCROACHMENT OF VEHICLES OVER THE REQUIRED WIDTH OF WALKWAYS. PARKING STALLS SHALL BE SO LOCATED THAT PERSONS WITH DISABILITIES ARE NOT COMPELLED TO WHEEL OR WALK BEHIND PARKED CARS OTHER THAN THEIR OWN.
4. SURFACE SLOPES OF ACCESSIBLE OFF-STREET PARKING STALLS SHALL BE THE MINIMUM POSSIBLE AND SHALL NOT EXCEED 2 PERCENT IN ANY DIRECTION.
5. TABLE A SHALL BE USED TO DETERMINE THE REQUIRED NUMBER OF ACCESSIBLE PARKING STALLS IN EACH PARKING LOT OR GARAGE.
6. WHERE PLAQUE R99B (CA), SIGN R99C (CA) OR SIGN R7-8B ARE INSTALLED, THE BOTTOM OF THE SIGN OR PLAQUE PANEL SHALL BE A MINIMUM OF 7'-0" ABOVE THE SURROUNDING SURFACE.
7. CURB RAMPS SHALL CONFORM TO THE DETAILS SHOWN ON REVISED STANDARD PLAN RSP A88A.
8. BLUE PAINT, INSTEAD OF WHITE MAY BE USED FOR MARKING ACCESSIBILITY AISLES IN AREAS WHERE SNOW MAY CAUSE WHITE MARKINGS TO NOT BE VISIBLE.
9. THE WORDS "NO PARKING", SHALL BE PAINTED IN WHITE LETTERS NO LESS THAN 1'-0" HIGH AND LOCATED SO THAT IT IS VISIBLE TO TRAFFIC ENFORCEMENT OFFICIALS. SEE REVISED STANDARD PLAN RSP A90B FOR DETAILS OF THE "NO PARKING" PAVEMENT MARKING.
10. A R100B (CA) SIGN SHALL BE POSTED IN A CONSPICUOUS PLACE AT EACH ENTRANCE TO OFF-STREET PARKING FACILITIES OR IMMEDIATELY ADJACENT TO AND VISIBLE FROM EACH STALL. THE SIGN SHALL INCLUDE THE ADDRESS WHERE THE TOWED VEHICLE MAY BE RECLAIMED AND THE TELEPHONE NUMBER OF THE LOCAL TRAFFIC LAW ENFORCEMENT AGENCY.
11. WHERE A SINGLE (NON-VAN) ACCESSIBLE PARKING SPACE IS PROVIDED, THE LOADING AND UNLOADING ACCESS AISLE SHALL BE ON THE PASSENGER SIDE OF THE VEHICLE AS THE VEHICLE IS GOING FORWARD INTO THE PARKING SPACE.
12. WHERE A VAN ACCESSIBLE PARKING SPACE IS PROVIDED, THE LOADING AND UNLOADING ACCESS AISLE SHALL BE 8'-0" WIDE MINIMUM, AND SHALL BE ON THE PASSENGER SIDE OF THE VEHICLE AS THE VEHICLE IS GOING FORWARD INTO THE PARKING SPACE.
13. ACCESSIBLE PARKING ONLY SIGN SHALL BE SIGN R99C (CA) OR SIGN R99 (CA)WITH PLAQUE R99B (CA).

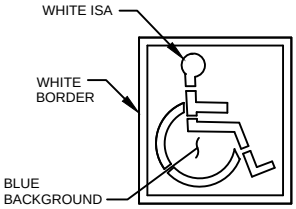

ISA MARKING
SEE REVISED STD PLAN RSP A24C
DETAIL A

TABLE A

TOTAL NUMBER OF PARKING SPACES OR STALLS	MINIMUM NUMBER OF DISABLED ACCESSIBLE PARKING SPACES OR STALLS
1-25	1
26-50	2
51-75	3
76-100	4
101-150	5
151-200	6
201-300	7
301-400	8
401-500	9
501-1000	2 PERCENT OF TOTAL
GREATER THAN 1001	20 PLUS 1 FOR EACH 100 OR FRACTION THEREOF OVER 1001

ISA = INTERNATIONAL SYMBOL OF ACCESSIBILITY

NOT TO SCALE	CITY OF CAPITOLA INCORPORATED 1949	STANDARD DRAWINGS FOR **HANDICAP PARKING (OFF-STREET)**	DRAWN: 1/15 / REV:
DRAWN BY: B&W			
CHECKED BY: JFR		STEVEN JESBERG, PUBLIC WORKS DIRECTOR	DRAWING No. CAP - 017

PAVING LEGEND

KEY	DESCRIPTION	COLOR/FINISH
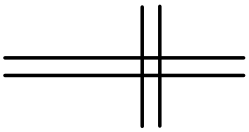	BRICK PAVER IN WALKWAY WITH 8"x8" BRICK AT INTERSECTION.	8"x4"x1.5" RED SUNSET BRICK BY WHITACRE-GREER IN SOLDIER COURSE PATTERN W/ 8"x8"x2.25" BRICK @INTERSECTION.
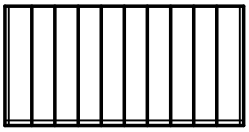	STAMPED COLORED CONCRETE CROSSWALK.	SOLOMON COLORS #417 BRICK RED W/ 18" SQ. UTAH STONE STAMP BY BRICKFORM STONE TEXTURES OR EQUAL. USE BRICKFORM LIGHT GRAY #600 AS RELEASE AGENT COLOR.
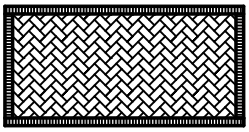	BRICK SEATING AREAS.	8"x4"x1.5" RED SUNSET BRICK PAVER BY WHITACRE-GREER IN HERRINGBONE PATTERN W/ SOLDIER COURSE ALONG EDGE WITH MEDIUM GRAY MORTAR.
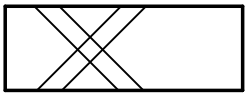	COLORED CONCRETE WALKWAYS.	SOLOMON COLORS #760 SIERRA TAN W/ MEDIUM BROOM FINISH.
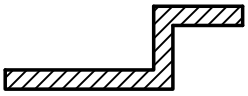	RAISED CONCRETE PLANTER WITH BRICK CAP.	NATURAL GRAY WITH LIGHT SAND BLAST FINISH WITH 4"x8"x2.5" RED SUNSET BRICK CAP AND 4"x8"x1.5" RED SUNSET BRICK PAVER BY WHITACRE-GREER DETAIL ON FRONT.

NOT TO SCALE	STANDARD DRAWINGS FOR **CAPITOLA VILLAGE STREETSCAPE IMPROVEMENTS**	DRAWN: 1/15	REV:
DRAWN BY: B&W			
CHECKED BY: JFR	STEVEN JESBERG, PUBLIC WORKS DIRECTOR	DRAWING No. CAP - 018	

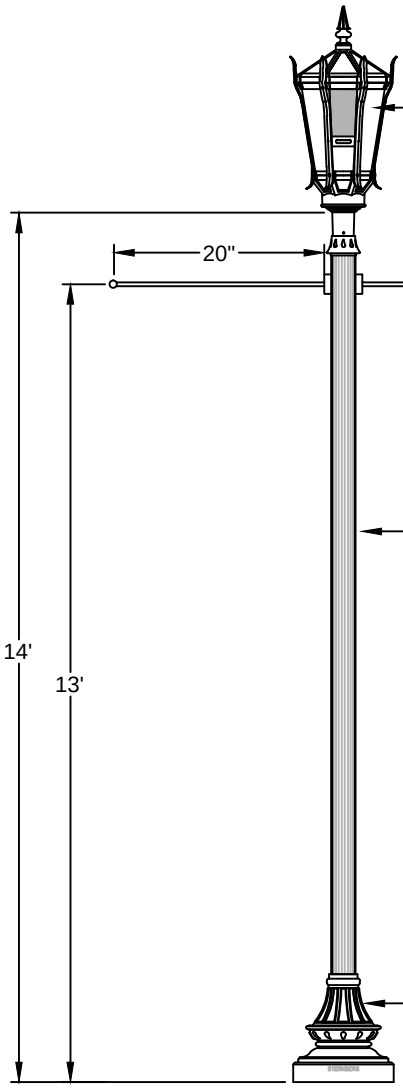

LANTERN:
MAIN STREET A - MS805A
TYPE 3 REFRACTOR
CSA - CLEAR SEEDED ACRYLIC LENS WITH /3 FITTER

BANNER ARM - SBA
(2) SINGLE BANNER ARMS SET FOR
18" WIDE FREE-FLOWING BANNERS

BANNERS BY OTHERS

5" DIA. STRAIGHT FLUTED POLE MADE OF
ASTM 6061 EXTRUDED ALUMINUM AND TEMPERED TO A
T6 CONDITION WITH A DECORATIVE FLUTED 3" O.D. TENON.

STERNBERG
555 LAWRENCE AVE.
ROSELLE, IL 60172
800-621-3376

4200 - AUGUSTA
17W x 19H CAST ALUMINUM

NOT TO SCALE	CITY OF CAPITOLA INCORPORATED 1949	STANDARD DRAWINGS FOR **CAPITOLA VILLAGE STREETSCAPE LIGHT POLE**	DRAWN: 1/15	REV:
DRAWN BY: B&W				
CHECKED BY: JFR		STEVEN JESBERG, PUBLIC WORKS DIRECTOR	DRAWING No. CAP - 019	

48" VERSION SHOWN

TREE GRATE #M4858
STYLE: SUNRISE

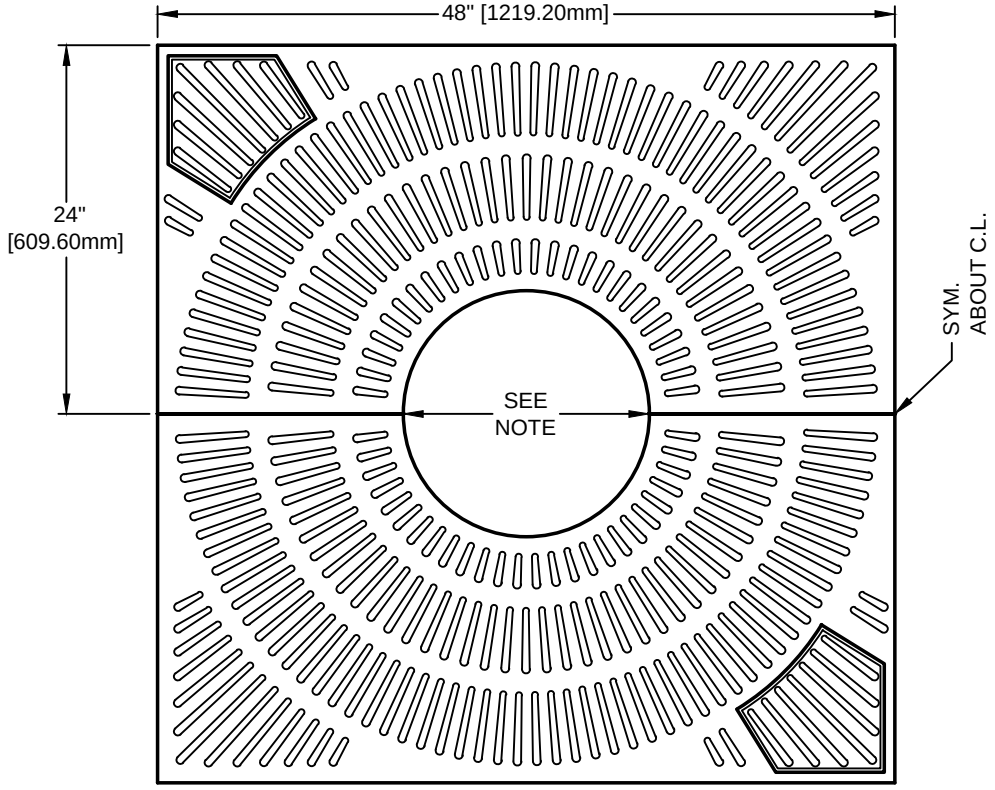

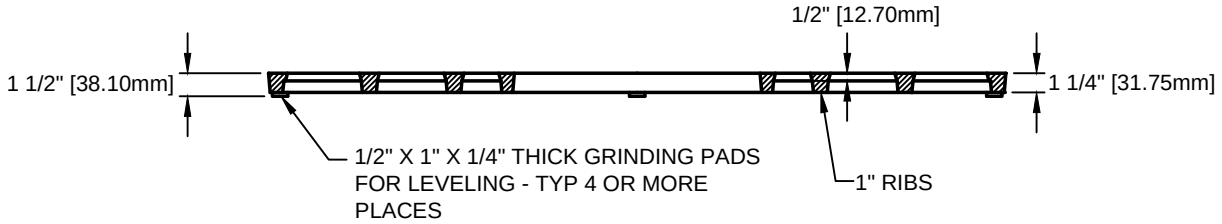

MODEL NO.	SIZE (INCHES)	TREE OPENING	WEIGHT: IRON	ALUM.
M4858	48	16, 24, 35	260	94
M6076	60	16, 24, 38	380	137
M7266	72	16, 24, 38	580	209

NOTE:
SLOT WIDTH IS 3/8" TO 1/2" MAXIMUM,
MEETS ADA COMPLIANCE.
GRATE CAST FROM IRON OR ALUMINUM
TREE OPENING SIZE. 16", 24" OR 35"
STEEL ANGLE FRAME REQUIRED
FOR INSTALLATION USE MODEL M4800F
OUTER FRAME DIM. IS 3/4" ± 1/8"
GREATER THAN GRATE.

IRONSMITH
41-701 CORPORATE WAY, #3
PALM DESERT, CA 92260
(800) 338-4766

NOT TO SCALE	STANDARD DRAWINGS FOR **CAPITOLA VILLAGE SUNRISE TREE GRATE**	DRAWN: 1/15	REV:
DRAWN BY: B&W			
CHECKED BY: JFR	STEVEN JESBERG, PUBLIC WORKS DIRECTOR	DRAWING No. CAP - 020	

POST CONSTRUCTION STORMWATER REQUIREMENTS

The Central Coast Regional Water Quality Control Board (Water Board) has implemented Post Construction Requirements or "PCRs" for all new development and redevelopment projects located within the jurisdiction of a small Municipal Separate Storm Sewer System (MS4) that is subject to the Phase II Statewide permit. The City of Capitola is one such jurisdiction.

◆Application. All applicants to the Community Development and/or Building Departments are required to complete the Storm Water Project Permit Application (SWPPA) form if planning a development or redevelopment project to identify the necessity and level of compliance with PCRs. Projects include single family homes, duplex and multi-family units, commercial buildings, and industrial facilities, among other projects. The PCR compliance criteria are provided, as follows:

Tier*	**Detached Single Family Homes**	**All Others (Commercial, Industrial, Two- & Multi-Family Homes)**
Exempt	New/Replaced impervious area < 2,500 sf	
Tier 1	New/Replaced impervious area ≥ 2,500 sf	New/Replaced impervious area ≥ 2,500 sf
Tier 2		*Net* impervious area ≥ 5,000 sf
Tier 3	*Net* impervious area ≥ 15,000 sf	New/Replaced impervious area ≥ 15,000 sf

Notes:

* *Tier numbers correspond to "Performance Requirements" identified in the Water Board resolution for PCRs.*

1. *Impervious area = includes structures, pavement, hardscaping – essentially any surface that will not allow water to infiltrate into the ground.*
2. *Net impervious area = the difference between post-project and pre-project impervious areas.*
3. *sf = square feet*

◆Technical Guide. Development and/or redevelopment projects require a certain measure of consideration when planning the site layout/design, preparing the construction documents, and preparing for long-term maintenance of storm water facilities that may be needed. For projects that are not exempt, site design must incorporate PCRs in accordance with one of the City's stormwater technical guidance documents for PCRs. For Tier 1 projects, refer to the "Tier 1 Stormwater Technical Guidance for Post Construction Requirements." For Tier 2 and Tier 3 projects, refer to the "Tier 2 and Tier 3 Stormwater Guidance for Post Construction Requirements."

Both documents are available at the Community Development and Building Departments and can also be downloaded from the City's website: *http://www.cityofcapitola.org/*

These guidance documents include reference links and jurisdictional resources, stormwater control plan templates, and template operations and maintenance form(s); permit application checklists are also included in the guidance documents to ensure the applicant provides the proper documentation required toward satisfying the PCRs upon application submittal to the City.

◆Design Standards. Specific storm water design standards, including bioretention swales, detention facilities, etc. may be found in the most recent versions for the California Stormwater Quality Association (CASQA) "Stormwater Best Management Practice Handbooks" for:

- New Development and Redevelopment
- Industrial and Commercial
- Municipal

The City accepts best management practices, design standards, and site design measures detailed in these references for implementation on certain projects within the City's jurisdiction, as long as the practices, standards, and measures are suitable for the intended application. The intended application will be described in detail in the guidance document(s).

◆Fees. Fees associated with reviews pertaining to storm water management are available at the City Planning Department.

◆Enforcement. Storm water management enforcement is described in Chapter 13.16 of the City's Municipal Code.

NOT TO SCALE	CITY OF CAPITOLA INCORPORATED 1949 FOUNDED 1874	STANDARD DRAWINGS FOR **STORMWATER POLLUTION PREVENTION AND PROTECTION**	DRAWN: 3/14	REV:
DRAWN BY: M.P.				
CHECKED BY: S.E.J.		STEVEN JESBERG, PUIBLIC WORKS DIRECTOR	DRAWING No. STRM-PCR-1	

Stormwater Pollution Prevention and Protection for Construction Projects

In the City of Capitola, water in streets, gutters, and storm drains flows directly to local creeks and Monterey Bay without any treatment. When debris, paint, concrete and other harmful pollutants from construction sites and home construction projects get spilled, leaked or washed into the street or storm drain they can damage sensitive creek habitats and end up polluting our bay and ocean.

In order to reduce the amount of pollutants reaching local storm drains and waterways, the City has developed "Best Management Practices" (BMPs) for construction work. All types of construction projects are required to abide by the following mandatory BMPs. These BMPs apply to both new and remodeled residential, commercial, retail, and industrial projects.

In addition to the following mandatory BMPs, the Central Coast Regional Water Quality Control Board (Regional Water Board) under the State Water Resources Control Board (State Water Board) requires coverage under and adherence to the Construction Activities Storm Water General Permit, or CGP, to regulate storm water runoff from construction sites. In general, any construction or demolition activity, including, but not limited to, clearing, grading, grubbing, or excavation, or any other activity that results in a land disturbance of equal to or greater than one acre, requires coverage under the CGP. Construction activities associated with Linear Underground Projects (LUPs) also require coverage under the CGP. It should be noted that SWPPP development and implementation (inspections, tracking) associated with sites subject to the CGP (excluding waiver sites) must be done by a qualified SWPPP developer (QSD), respectively. More information on the CGP and QSD/QSPs may be found at http://www.waterboards.ca.gov/water_issues/programs/stormwater/constpermits.shtml

◆General Construction & Site Supervision

All construction BMPS, sediment and erosion control must be installed prior to beginning construction and maintained throughout the project duration. Compliance with the CGP and below BMPs is required year round.

General Principles

- □ Keep an orderly site and ensure good housekeeping practices are used.
- □ Maintain equipment properly.
- □ Cover materials when they are not in use.
- □ Keep materials away from streets, gutters, storm drains and drainage channels.
- □ Ensure dust control water does not leave the site or discharge to storm drains.
- □ Train your employees on these BMPs and familiarize them with storm water issues prior to beginning work. Inform your subcontractors about storm water requirements and be sure that they also abide by these BMPs.
- □ Refer to the following approved references for BMP selection, implementation, and on-site management (most recent versions unless otherwise noted):
  - *Erosion & Sediment Control Field Manual*, California Regional Water Quality Control Board San Francisco Bay Region, Fourth Edition August 2002.
  - *Manuel of Standards for Erosion and Sediment Control Measures*, Association of Bay Area Governments (ABAG)
  - *Construction Best Management Practices (BMPs) Handbook*, California Stormwater Quality Association (CASQA)
  - *Construction Site Best Management Practices (BMPs) Manual*, Storm Water Quality Handbooks, Caltrans

Good Housekeeping Practices

- □ Designate one area of the site located away from storm drains, drainage swales, and creeks for auto parking and heavy equipment storage, vehicle refueling and routine equipment maintenance.
- □ To prevent off-site tracking of dirt, provide site entrances with stabilized aggregate surfaces or provide a tire wash area on the site, but away from storm inlets or drainage channels. Mud, dirt, gravel, sand and other materials tracked or dropped on city streets must be cleaned up to prevent washing into the storm drains.
- □ Keep materials and soil stockpiles out of the rain and prevent runoff contamination from the site. Store materials, stockpiles and excavation soils under cover and protected from wind, rain, and runoff. Cover exposed piles of construction materials or soil with plastic sheeting or temporary roofs. Before rainfall events, sweep and remove material from surfaces that drain to storm inlets and/or drainage channels.
- □ Place trash cans around the site to reduce litter. Dispose of non-hazardous construction wastes in covered dumpsters or recycling receptacles.
- □ Keep dumpster lids closed and secured. For dumpsters or bins that don't have a lid, cover them with tarps or plastic sheeting, secured around the exterior of the dumpster or place them under temporary roofs. Never clean out a dumpster by hosing it down on the construction site.

NOT TO SCALE	CITY OF CAPITOLA FOUNDED 1874 INCORPORATED 1949	STANDARD DRAWINGS FOR **STORMWATER POLLUTION PREVENTION AND PROTECTION FOR CONSTRUCTION PROJECTS**	DRAWN: 2/14	REV:
DRAWN BY: M.P.				
CHECKED BY: S.E.J.		STEVEN JESBERG, PUIBLIC WORKS DIRECTOR	DRAWING No. STRM-BMP-1	

- □ Clean up leaks, drips and other spills immediately so that they do not contaminate the soil or runoff nor leave residue on paved surfaces. Use dry cleanup methods whenever possible. Water may only be used in minimum quantities to prevent dust.
- □ If portable toilets are used, ensure that the leasing company properly maintains the toilets and promptly makes repairs. Conduct visual inspections for leaks.
- □ Protect vegetation and trees from accidental damages from construction activities by surrounding them with fencing or tree armoring.

Advanced Planning

- □ Site development shall be fitted to the topography and soils in order to minimize the potential for erosion.
- □ Soil grading/clearing limits, easements, setback, sensitive or critical areas, trees, drainage courses, and buffer zones must be delineated on site to prevent excessive or unnecessary disturbances and exposure prior to construction.
- □ Schedule excavation and grading activities for dry weather periods. To reduce soil erosion, plant temporary vegetation or place other erosion controls before rain begins.
- □ Conduct grading operations in phases in order to reduce the amount of disturbed areas and exposed soil at any one time. Unless specifically approved on the project's drainage plan, grading, sediment and erosion control plan, clearing, excavation and grading shall not be conducted during rainy weather. All rainy season grading shall be in accordance with Capitola Municipal Code Chapter 15.28.
- □ Control the amount of runoff crossing your site especially during excavation by using berms or temporary drainage ditches or bio-swales to divert water flow around the site. Reduce stormwater runoff velocities by constructing temporary check dams or berms where appropriate.

Materials & Waste Handling

- □ Practice contaminant "Source Reduction" by estimating carefully and minimizing waste when ordering materials.
- □ Recycle excess materials such as concrete, asphalt, scrap metal, solvents, degreasers, paper, and vehicle maintenance materials whenever possible.
- □ Dispose of all wastes properly by ensuring that materials that cannot be recycled are taken to an appropriate land fill or disposed of as hazardous waste. Never bury waste materials or leave them in the street or near a creek or drainage channel.

◆Landscaping, Gardening & Ponds/Fountains/Pool/Spa Maintenance

Many landscaping activities and practices expose soils and increase the likelihood of water runoff that will transport earth, sediments and garden chemicals to the storm drain during irrigation or rain events. Other exterior amenities such as ponds, pools and spas require regular maintenance using chlorine and/or copper based algaecides. Water treated with these chemicals is toxic to aquatic life and should never be discharged to the storm drain.

Landscaping & Garden Maintenance

- □ Protect stockpiles and landscaping materials from wind and rain by storing them under tarps or secured plastic sheeting.
- □ Schedule grading and excavation during dry weather.
- □ Use temporary check drains or ditches to direct runoff away from storm drains or drainage channels.
- □ Protect storm drain inlets with sandbags, gravel filled bags, straw wattles, filter fabric or other sediment controls.
- □ Re-vegetation is an excellent form of erosion control for any site.
- □ Never dump or leave soil, mulch, or other landscape products in the street, gutter, or storm drain.

Ponds/Fountains/Pool/Spa Maintenance

- □ When draining a pond, fountain, pool or spa, any volumes in excess of 500 gallons must be reported in advance to the City of Capitola Public Works Department. The City will provide guidance on handling special cleaning waste, flow rate restrictions and backflow prevention.

◆Preventing Water & Sediment Runoff

Effective erosion and sediment control measures must be implemented and maintained on all disturbed areas in order to prevent a net increase of sediment in the site's storm water discharge relative to pre-construction levels. During the rainy season, erosion control measures must also be located at all appropriate locations along the site's perimeter and at all inlets to the storm drain system. Effective methods to protect storm drain inlets include sand bag barriers, heavy rubber mats to cover and seal the inlet, and sediment traps or basins. Refer to the Erosion & Sediment Control Field Manual, California Regional Water Quality Control Board San Francisco Bay Region, Fourth Edition August 2002; *and the most recent versions of the Manual of Standards for Erosion and Sediment Control Measures,* Association of Bay Area Governments (ABAG)*, and Construction Best Management Practices (BMPs) Handbook,* California Stormwater Quality Association (CASQA).

- □ Effective filtration devices, barriers, and settling devices shall be selected, installed and maintained properly.
- □ Silt fences must be installed so that the drainage around each fence does not create additional erosion and rills down slope of the fence.
- □ If straw wattles are used to filter sediment runoff, ensure that the bales are actually filtering the water (and not just causing the water to travel around the bale) and that the straw pieces are not carried into the storm drain system.
- □ Whenever possible, use terracing, surface roughening (e.g. with a bulldozer), and energy dissipaters (such as riprap, sand bags and rocks) on slopes to reduce runoff velocity and trap sediments. Do not use asphalt rubble or other demolition debris for this purpose.
- □ All on-site erosion control measures and structural devices, both temporary and permanent, shall be properly maintained so that they do not become nuisances with stagnant water, odors, insect breeding, heavy algae growth, debris, and/or safety hazards
- □ A qualified person should conduct inspections of all on-site BMPs during each rainstorm and after a storm is over to ensure that the BMPs are functioning properly. For sites greater than one-acre, onsite inspections are required in accordance with the GCP.

◆Earth Moving Activities & Heavy Equipment

Soil excavation and grading operations loosen large amounts of soil that can be transported into storm drains when handled improperly. Effective erosion control practices reduce the amount of runoff crossing a site and slow the flow with check dams or roughened ground surfaces. Often, earth moving activities require use and storage of heavy equipment. Poorly maintained vehicles and heavy equipment that leak fuel, oil, antifreeze or other fluids onto the construction site are common sources of storm drain pollution.

Site Planning

- □ Maintain all heavy equipment, inspect frequently for leaks, and repair leaks immediately upon discovery.
- □ Perform major auto or heavy equipment maintenance, repair jobs and vehicle or equipment washing off-site.
- □ If you must drain and replace motor oil, radiator coolant or other fluids on site, use drip pans, plastic sheeting or drop cloths to catch drips and spills. Collect all spent fluids, store in separate containers and properly dispose as hazardous waste. Recycle whenever possible.
- □ Do not use diesel oil to lubricate equipment parts or clean equipment. Only use water for onsite cleaning.
- □ Cover exposed fifth wheel hitches and other oily or greasy equipment during all rain events.

Practices During Construction

- □ Remove existing vegetation only when absolutely necessary. Plant temporary vegetation for erosion control on slopes or where construction is not immediately planned.
- □ Protect down slope drainage courses, creeks and storm drains with wattles or temporary drainage swales.
- □ Use check dams or ditches to divert runoff around excavations. Refer to the Erosion & Sediment Control Field Manual, California Regional Water Quality Control Board San Francisco Bay Region, Fourth Edition August 2002; and the most recent versions of the *Manual of Standards for Erosion and Sediment Control Measures,* Association of Bay Area Governments (ABAG), and *Construction Best Management Practices (BMPs) Handbook,* California Stormwater Quality Association (CASQA).
- □ Cover stockpiles and excavated soil with secured tarps or plastic sheeting.

Spill Clean Up

- □ Maintain a spill clean-up kit on site.
- □ Clean up spills immediately. Use dry cleanup methods if possible.
- □ Never hose down dirty pavement or impermeable surfaces where fluids have spilled. Use dry cleanup methods (absorbent materials, cat litter and/or rags) whenever possible and properly dispose of absorbent materials.
- □ Sweep up spilled dry materials immediately. Never attempt to wash them away with water or bury them.
- □ Use as little water as possible for dust control. If water is used, ensure it does not leave silt or discharge to storm drains.
- □ Call 911 for significant spills. If the spill poses a significant hazard to human health and safety, you must also report it to the State Office of Emergency Services.

◆Painting, Varnish & Application of Solvents & Adhesives

Paints, varnish, solvents and adhesives contain chemicals that are harmful to wildlife and aquatic life in our community. Toxic chemicals may come from liquid or solid products or from cleaning residues or rags. Paint materials and wastes, adhesives and cleaning fluid should be recycled when possible or properly disposed to prevent these substances from entering the storm drains and watercourses.

Handling of Surface Coatings

- □ Keep paint, varnish, solvents and adhesive products and wastes away from the gutter, street and storm drains. Wastewater or runoff containing paint or paint thinner must never be discharged into the storm drain system.
- □ When there is a risk of a spill reaching the storm drain, nearby storm drain inlets must be protected prior to starting painting.

Removal of Surface Coatings

- □ Non-hazardous paint chips and dust from dry stripping and sand blasting may be swept up or collected in plastic drop cloths and disposed of as trash.
- □ Chemical paint or varnish stripping residue, chips and dust from marine paints or varnishes, or paints containing lead, mercury or tributyltin must be disposed of as hazardous wastes. Lead based paint removal requires a state-certified contractor. Paint may be tested for lead by taking paint scrapings to a local, state-certified laboratory.
- □ When stripping or cleaning building exteriors with high-pressure water, block storm drains to prevent flow to creeks and the Monterey Bay.
- □ Wash water from painted buildings constructed pre-1978 can contain high amounts of lead even if paint chips are not present. Before stripping paint or cleaning a pre-1978 building's exterior with water under high pressure, test paint for lead by taking paint scrapings to a local, state-certified laboratory.

Clean Up of Surface Coatings

- □ Never clean brushes or rinse paint or varnish containers into a gutter, street, storm drain, French drain or creek.
- □ For water based paints, paint out brushes to the extent possible and rinse into an interior sink drain that goes to the sanitary sewer.
- □ For oil based paints, paint out brushes to the extent possible and clean with thinner or solvent. Filter and reuse thinners and solvents where possible. Dispose of excess liquids and residue as hazardous waste.
- □ When thoroughly dry, empty paint cans, used brushes, rags and drop cloths may be disposed of as garbage.

Disposal of Surface Coatings

- □ Recycle, return to supplier, or donate unwanted water-based (latex) paint. Oil-based paint may be recycled or disposed of as hazardous waste. Varnish, thinners, solvents, glues and cleaning fluids must be disposed of as hazardous waste.
- □ When the job is completed, collect all unused or waste materials and dispose of properly. Never leave or abandon materials onsite, and ensure that nothing has drifted toward the street, gutter, or catch basin.

◆Roadwork & Paving

- □ Protect nearby storm drain inlets and adjacent water bodies prior to breaking up asphalt or concrete.
- □ The discharge of saw cut slurry to the storm drain system is prohibited. Take measures to contain the slurry and protect nearby catch basins or gutters. If slurry enters the storm drain system, remove material immediately.
- □ Dried, saw cut slurry must be cleaned up and properly disposed so that it will not be carried into the storm drain system by wind, traffic, or rainfall.
- □ After breaking up old pavement, sweep up materials and recycle as much as possible. Properly dispose of non-recyclable materials.
- □ Cover and seal nearby storm drain inlets and manholes before applying seal coat, slurry seal, etc. Leave covers in place until the oil sealant is dry.
- □ In the event of rain during construction, divert runoff around work areas and cover materials.
- □ Park paving machines over drip pans or absorbent materials.
- □ Never wash sweepings from exposed aggregate concrete into a street or a storm drain inlet. Collect and return to aggregate base stockpile or dispose of in the trash.
- □ Remove and clean up material stockpiles (i.e. asphalt and sand) by the end of each week or, if during the rainy season, by the end of each day. Stockpiles must be removed by the end of each day if they are located in a public right-of-way.

◆Concrete, Cement, & Masonry Products

- □ Concrete, cement, masonry products, sediment or pollutant laden water shall never be discharged into or allowed to reach the storm drain system.
- □ Avoid mixing excess amount of fresh concrete or cement mortar on-site.
- □ During tile cutting, ensure that the slurry water does not run off into the street or storm drain system. The discharge of slurry to the storm drain system is prohibited. Dried slurry must be cleaned up and disposed of properly.
- □ Concrete, cement, and masonry mixing containers may not be washed or rinsed into the street or storm drain system. If a concrete transit mixer is used, a suitable washout box, excavation or self-washing mixer able to contain waste material shall be provided on-site.
- □ Never wash or rinse mixing containers and tools into the gutter, street, storm drain inlet, drainage ditches or water body.
- □ If conducting sidewalk work, material stockpiles must be removed and cleaned up by the end of each day. Sweep or collect unused materials and debris that remain on pavement and dispose of properly.
- □ When the job is completed, collect all unused or waste materials and dispose of properly. Never leave or abandon materials onsite. Ensure that nothing has drifted towards the street, gutter or catch basin.

◆Site Clean Up

- □ Clean up by sweeping instead of hosing down whenever possible. Dispose of litter and debris in the garbage.
- □ The street, sidewalk and other paved areas may not be cleaned by washing or by directing sediment, concrete, asphalt, or other particles into the storm drain system. If water is used to flush sediment or particles from pavement, the water must be directed to a landscaped or grassy area large enough to absorb all the water.
- □ If conducting road or sidewalk work, materials stockpiles must be removed and cleaned up by the end of each work day.
- □ Discarded building materials and demolition wastes must never be left in a street, gully, or waterway. Dispose of all wastes properly including leftover paint and chemicals. Materials that cannot be reused or recycled must be taken to the landfill or disposed of as hazardous waste.

Signed and Agreed to by:
Project Owner or General Contractor

Signed: _____ Date:_____

Print Name: _____

NOT TO SCALE	CITY OF CAPITOLA FOUNDED 1874 INCORPORATED 1949	STANDARD DRAWINGS FOR **STORMWATER POLLUTION PREVENTION AND PROTECTION**	DRAWN: 2/14	REV:
DRAWN BY: M.P.				
CHECKED BY: S.E.J.		STEVEN JESBERG, PUIBLIC WORKS DIRECTOR	DRAWING No. STRM-BMP-5	